REQUEST FOR PROPOSALS
FOR

FC-8412
ANNUAL CONTRACT FOR
SANITARY SEWER REPAIR SERVICES

ATLANTA, GEORGIA

JoAnn J. Macrina, PE
Commissioner
Department of Watershed Management

Adam L. Smith, Esq., CPPO, CPPB, CPPM, CPP
CIPC, CISCC, CIGPM
Chief Procurement Officer
Department of Procurement

CITY OF ATLANTA

Kasim Reed
Mayor

SUITE 1900
55 TRINITY AVENUE, SW
ATLANTA, GA 30303
(404) 330-6204 Fax: (404) 658-7705
Internet Home Page: www.atlantaga.gov

DEPARTMENT OF PROCUREMENT
Adam L. Smith, Esq., CPPO, CPPB, CPPM, CPP
CIPC, CISCC, CIGPM
Chief Procurement Officer
asmith@atlantaga.gov

September 21, 2015

ATTENTION INTERESTED PROPONENTS:

Your firm is hereby invited to submit to the City of Atlanta, Department of Procurement ("**DOP**"), a proposal for **FC-8412, Annual Contract for Sanitary Sewer Repair.** The City of Atlanta (the "**City**") is soliciting proposals from qualified firms for the emergency repair of sanitary and storm sewers in various portions of the City's separate and combined sewer collection system, as designated by the Engineer throughout the course of the work. The objective is to remedy any detrimental defects to sewers and sewer overflow conditions in order to restore the structural integrity of the sewer while maximizing sewer and manhole service efficiency and effectiveness.

A **Pre-Proposal Conference** will be held on **Tuesday, September 29, 2015,** at **11:00 A.M. EDT**, at 55 Trinity Avenue, S.W., Suite 1900 (1st Floor), City Hall South, Atlanta, Georgia 30303. The purpose of the Pre-Proposal Conference is to provide proponents with detailed information regarding the project and to address questions and concerns. There will be representatives from the Department of Watershed Management, Office of Contract Compliance and Risk Management available at the conference to discuss this project and to answer any questions. Proponents are strongly encouraged to attend the Pre-proposal Conference.

Proponents will be allowed to ask questions during the Pre-Proposal Conference. However, please note that oral answers to questions during the Pre-proposal Conference are not authoritative. Authoritative responses to all written questions will be published and made available to all proponents in the form of an addendum. The deadline to submit questions in writing is **Monday, October 5, 2015, at 1:00 P.M. EDT.**

Your response to this Request for Proposals ("**RFP**") must be received by designated staff of the Department of Procurement at 55 Trinity Avenue, S.W., Suite 1900 (1st Floor), City Hall South, Atlanta, Georgia 30303, **no later than 2:00 P.M. EDT, Wednesday, October 28, 2015.**

****ABSOLUTELY NO PROPOSALS WILL BE ACCEPTED AFTER 2:00 P.M. EDT****

Proposals will be publicly opened and read at 2:01 P.M. EDT on the respective due date in Suite 1900 (1st Floor), 55 Trinity Avenue, S.W., City Hall South, Atlanta, Georgia 30303.

This RFP is being made available by electronic means. If accepted by such means, then the proponent acknowledges and accepts full responsibility to insure that no changes are made to the RFP. In the event of conflict between a version of the RFP in the proponent's possession and the version maintained by the DOP, the version maintained by the DOP shall govern.

You are required to email and confirm receipt of your business name, contact person, address, phone number, fax number, email address, and the project number to Teresa Slayton, CPPB, CPPM, CPP, GCPM, GCPA, Contracting Officer, at tslayton@atlantaga.gov in order to be placed on the Plan Holders List. Failure to do so may prevent you from receiving any addenda that are issued and may deem you non-responsive.

This RFP may also be obtained from the Department of Procurement, Plan Room, 55 Trinity Avenue, S.W., Suite 1900 (1st Floor), City Hall South, Atlanta, Georgia 30303, at a cost of $300.00 per package, beginning on Monday, September 21, 2015. All purchased solicitation documents include a solicitation package; scope of work booklet and full size drawings (if applicable).

If you have any questions regarding this project, please contact Teresa Slayton, CPPB, CPPM, CPP, GCPM, GCPA, Contracting Officer, at (404) 865-8757 or by email at tslayton@atlantaga.gov. Any questions regarding the procedure for purchasing a copy of the document or obtaining a copy of the Plan Holders List should be directed to the Plan Room at (404) 330-6204.

The City reserves the right to cancel any and all solicitations and to accept or reject, in whole or in part, any and all proposals when it is for good cause and in the best interest of the City.

Thank you for your interest in doing business with the City.

Sincerely,

Adam L. Smith

ALS/ts

FC-8412, Annual Contract for Sanitary Sewer Repair Services

TABLE OF CONTENTS

1. **PART 1: INFORMATION AND INSTRUCTIONS TO PROPONENTS**
2. **PART 2: CONTENTS OF PROPOSALS/REQUIRED SUBMITTALS**
3. **PART 3: EVALUATION OF PROPOSALS**
4. **PART 4: REQUIRED SUBMITTAL FORMS**

   Form 1: Illegal Immigration Reform and Enforcement Act Forms

   Form 2: Contractor Disclosure Form

   Form 3: Proponent Financial Disclosure

   Form 4.1: Certification of Insurance Ability

   Form 4.2: Certificate of Bonding Ability

   Form 5: Acknowledgement of Addenda

   Form 6: Proponent Contact Directory

   Form 7: Reference List

   Form 8: Proposal Bond (N/A)

   Form 9: Required Submittal Checklist

5. **PART 5: DRAFT CONSTRUCTION SERVICES AGREEMENT**

   Exhibit A General Scope of Services

   Exhibit A.1 Compensation and Fee Schedule

   Exhibit A.2 Work Orders

   Exhibit B Legislation

   Exhibit C Supplemental Conditions and Technical Specifications

   Exhibit D Additional Contract Documents

Appendix A Office of Contract Compliance

Appendix B Insurance and Bonding Requirements

Appendix C Drawings

PART I

Instructions to Proponents

Part 1; Information and Instructions to Proponents

1. **Services Being Procured:** This Request for Proposals ("**RFP**") from qualified proponents ("**Proponent**" or "**Proponents**") by the City of Atlanta (the "**City**"), on behalf of its Department of Watershed Management ("**DWM**"), seeks proposals for the following services ("**Services**"): qualified firms for the emergency repair of sanitary and storm sewers in various portions of the City's separate and combined sewer collection system, as designated by the Engineer throughout the course of the work. The objective is to remedy detrimental defects to sewers and sewer overflow conditions and to restore the structural integrity of the sewer while maximizing sewer and manhole service efficiency and effectiveness.

2. **Scope of Services:** A more detailed Scope of Services ("**SOS**") is set forth in Exhibit A– Scope of Services attached to the Draft Construction Services Agreement ("**Services Agreement**"); Contract No. **FC-8412; Annual Contract for Sanitary Sewer Repair Services**, included in this RFP at Part 5.[1]

3. **Method of Source Selection:** This procurement is being conducted in accordance with all applicable provisions of the City's Code of Ordinances, including its Procurement and Real Estate Code and the particular method of source selection for the services sought in this RFP is Code Section 2-1189; Competitive Sealed Proposals. By submitting a Proposal concerning this procurement, a Proponent acknowledges that it is familiar with all laws applicable to this procurement, including, but not limited to, the City's Code of Ordinances and Charter, which laws are incorporated into this RFP by reference.

4. **Minimum Qualification; Authority to Transact Business in Georgia:**

   4.1. Each Proponent must submit with its Proposal documentation that demonstrates it is duly authorized to conduct business in the State of Georgia.
   4.2. Each Proponent must be able to demonstrate a minimum of five (5) years of experience in providing services of the same size and scope.

5. **No Offer by City; Firm Offer by Proponent:** This procurement does not constitute an offer by City to enter into an agreement and cannot be accepted by any Proponent to form an agreement. This procurement is only an invitation for offers from interested Proponents and no offer shall bind City. A Proponent's offer is a firm offer and may not be withdrawn except under the rules specified in City's Code of Ordinances and other applicable law.

6. **Proposal Deadline:** Your response to this RFP must be received by the City's Department of Procurement, 55 Trinity Avenue, S.W., City Hall South, Suite 1900, Atlanta, Georgia 30303-0307, **no later than 2:00 P.M., EDT** (as verified by the Bureau of National Standards) on **Wednesday, October 28, 2015**. Any Proposal received after this time will not be considered and will be rejected and returned.
7. **Pre-Proposal Conference:** Each Proponent is highly encouraged to attend the Pre-Proposal Conference scheduled for, **Tuesday, September 29, 2015 at 11:00 A.M. EDT.**, in the

[1] All capitalized terms contained in the Services Agreement are incorporated into this RFP.

Department of Procurement's Bid Room, Suite 1900. Each Proponent must be fully informed regarding all existing and expected conditions and matters which might affect the cost or performance of the Services. Any failure to fully investigate the job requirements shall not relieve any Proponent from the responsibility of evaluating the difficulty or cost of successfully performing the Services properly.

8. **Procurement Questions; Prohibited Contacts:** Any questions regarding this RFP should be submitted in writing to the City's contact person, Teresa Slayton, CPPB, CPPM, CPP, GCPM, GCPA, Contracting Officer, Department of Procurement, 55 Trinity Avenue, SW, Suite 1900, Atlanta, Georgia 30303, fax (404) 739-4100 or e-mail tslayton@atlantaga.gov **on or before Monday, October 5, 2015 at 1:00 P.M. EDT.** Questions received after the designated period may not be considered. Any response made by the City will be provided in writing to all Proponents by addendum. It is the responsibility of each Proponent to obtain a copy of any addendum issued for this procurement by monitoring the City's website at http://www.atlantaga.gov/procurement and its Department of Procurement's Plan Room which is open during posted business hours, Suite 1900, 1st Floor, 55 Trinity Avenue, S.W., City Hall South, Atlanta, Georgia 30303. No Proponent may rely on any verbal response to any question submitted concerning this RFP. All Proponents and representatives of any Proponent are strictly prohibited from contacting any other City employees or any third-party representatives of the City on any matter having to do with this RFP. All communications by any Proponent concerning this RFP must be made to the City's contact person, or any other City representatives designated by the Chief Procurement Officer in writing.

9. **Ownership of Proposals:** Each Proposal submitted to the City will become the property of the City, without compensation to a Proponent, for the City's use, in its discretion.

10. **Georgia Open Records Act:** Information provided to the City is subject to disclosure under the Georgia Open Records Act (**"GORA"**). Pursuant to O.C.G.A. § 50-18-72(a)(34), "[a]n entity submitting records containing trade secrets that wishes to keep such records confidential under this paragraph shall submit and attach to the records an affidavit affirmatively declaring that specific information in the records constitute trade secrets pursuant to Article 27 of Chapter 1 of Title 10 [O.C.G.A. § 10-1-760 et seq.]"

11. **Insurance and/or Bonding Requirements:** The Insurance and/or Bonding requirements for any Agreement that may be awarded pursuant to this RFP are set forth in Appendix B-Insurance and Bonding Requirements attached to the Services Agreement included in this RFP.

12. **Applicable City OCC Programs:** The City's Office of Contract Compliance (**"OCC"**) Programs applicable to this procurement are set forth in Appendix A; Office of Contract Compliance Submittals, attached to the Services Agreement included in this RFP. By submitting a Proposal in response to this procurement, each Proponent agrees to comply with such applicable OCC Programs.

13. **Evaluation of Financial Information:** The City's evaluation of financial information concerning a Proponent and its consideration of such information in determining whether a

Proponent is responsive and responsible may involve a review of several items of information required to be included in a Proposal. The City will review the information included in **Form 3**; **Proponent Financial Disclosure** attached to this RFP and any additional information required on that form to be included in a Proposal. Further, if this RFP requires the provision of a Payment Bond and/or Performance Bond if an Agreement is awarded, the City will review the information included in **Form 4.2**; **Certification of Bonding Ability** indicating that the financial capacity of the Proponent is such that the insurer(s)/surety(ies) is/are willing to issue insurance and Payment and Performance Bonds for the Proponent if an Agreement is awarded to it. Further, if this RFP requires a successful Proponent that is awarded an Agreement pursuant to this procurement to post some other type of performance guarantee (e.g. letter of credit, guaranty agreement, etc.), a Proponent must submit with its Proposal a notarized letter from an appropriate financial institution (e.g. bank) indicating that it is willing to issue such performance guarantee for the Proponent if an Agreement is awarded to it.

14. Special Rules Applicable to Evaluation of Proposals: A Proponent may be required to submit, in writing, the addresses of any proposed subcontractors or equipment manufacturers listed in the Proposal and to submit other material information relative to proposed subcontractors. The City reserves the right to disapprove any proposed subcontractors whose technical or financial ability or resources or whose experience are deemed inadequate.

15. Examination of Proposal Documents:

15.1. Each Proponent is responsible for examining, with appropriate care, the complete RFP and all Addenda and for informing itself with respect to all conditions which might in any way affect the cost or the performance of any Services. Failure to do so will be at the sole risk of the Proponent, who is deemed to have included all costs for performance of the Services in its Proposal.

15.2. Each Proponent shall promptly notify the City in writing should the Proponent find discrepancies, errors, ambiguities or omissions in the Proposal Documents, or should their intent or meaning appear unclear or ambiguous, or should any other question arise relative to the RFP. Replies to such notices may be made in the form of an addendum to the RFP, which will be issued simultaneously to all potential Proponents who have obtained the RFP from City.

15.3. The City may, in accordance with applicable law, by addendum, modify any provision or part of the RFP at any time prior to the Proposal due date and time. The Proponent shall not rely on oral clarifications to the RFP unless they are confirmed in writing by the City in an issued addendum.

15.4. Each Proponent must confirm Addenda have been received and acknowledge receipt by executing **Form 5**; **Acknowledgment of Addenda** attached to this RFP at Part 4.

16. Cancellation of Solicitation: This solicitation may be cancelled in accordance with the City's Code of Ordinances.

17. **Award of Agreement; Execution:** If the City awards an Agreement pursuant to this procurement, the City will prepare and forward to the successful Proponent an Agreement for execution substantially in the form included in this RFP.

18. **Illegal Immigration Reform and Enforcement Act**: This RFP is subject to the Illegal Immigration Reform and Enforcement Act of 2011 ("**IIREA**" or "the **Act**"). IIREA was formerly known as the Georgia Security and Immigration Compliance Act or GSCIA. Pursuant to the Act, the Proponent must provide with its Proposal proof of its registration with and continuing and future participation in the E-Verify Program established by the United States Department of Homeland Security. A completed Contractor Affidavit (**Form 1**), set forth in Part 4; Illegal Immigration Reform and Enforcement Act Forms, must be submitted on the top of Volume II of the Proposal at the time of submission, prior to the time for opening the Proposal. Under state law, the City cannot consider any Proposal which does not include completed forms. Where the business structure of a Proponent is such that Proponent is required to obtain an Employer Identification Number (EIN) from the Internal Revenue Service, Proponent must complete the Contractor Affidavit (**Form 1**) on behalf of, and provide a Federal Work Authorization User ID Number issued to, the Proponent itself. Where the business structure of a Proponent does not require it to obtain an EIN, each entity comprising Proponent must submit a separate Contractor Affidavit (**Form 1**). It is not the intent of this notice to provide detailed information or legal advice concerning the Act. All Proponents intending to do business with the City are responsible for independently apprising themselves of and complying with the requirements of the Act and assessing its effect on City procurements and their participation in those procurements. For additional information on the E-Verify program or to enroll in the program, go to: https://e-verify.uscis.gov/enroll. Additional information on completing and submitting the Contractor Affidavit (**Form 1**) precedes the Affidavit.

19. **Multiple Awards**: The City reserves, at its sole discretion, the option to award to multiple Proponents. The award(s) will be based on the SOS in its entirety or by components. Multiple awards may be made on the total SOS or components of the SOS.

PART II

Contents of Proposals and Required Submittals

Part 2; Contents of Proposals/Required Submittals

1. **General Contents of Proposals:** A Proponent must submit a complete Proposal in response to this RFP in the format specified in this RFP; no other format will be considered. A Proposal will consist of two (2) separate documents:
   1.1. Informational Proposal; and
   1.2. Cost Proposal (Form provided by City at Part 5; Contract Services Agreement; Exhibit A.1-Cost Proposal). Exhibit A.1-Cost Proposal will become part of the Contract Services Agreement attached to this RFP, if an Agreement is awarded pursuant to this procurement.

2. **Informational Proposal:** An Informational Proposal is comprised of 2 sources of information:
   2.1. Volume I, information drafted and provided by a Proponent; and
   2.2. Volume II, information provided by a Proponent on forms provided by the City (or required to be created by a Proponent) in this RFP.

   The Informational Proposals must be tabbed as indicated to reflect the sections listed in the Outline below.

3. **Information Required to Be Included in Informational Proposal:**

   3.1. Summary: The following is a summary of information required to be contained in an Informational Proposal:
   3.1.1. Information Drafted and Provided By a Proponent: This information should be included in **Volume I** of the Proposal:
   3.1.1.1. Executive Summary;
   3.1.1.2. Organizational Structure;
   3.1.1.3. Experience and Qualifications of Key Staff;
   3.1.1.4. Overall Experience, Qualifications and Performance on Previous Similar Projects; and
   3.1.1.5. Management Plan AND Project Approach

   3.1.2. Information Provided by a Proponent on Forms Provided by the City: This information should be included in **Volume II** of the Proposal:
   3.1.2.1. Forms attached to this RFP at Part 4: This information should be included in **Volume II** of the Proposal**:**
   3.1.2.1.1. Form 1; Georgia Illegal Immigration Reform and Enforcement Act **(**IIREA**)** Form;
   3.1.2.1.2. Form 2; Contractor Disclosure Form and Questionnaire;
   3.1.2.1.3. Form 3; Proponent Financial Disclosure;
   3.1.2.1.4. Form 4.1; Certificate of Insurance
   3.1.2.1.5. Form 4.2; Certification of Bonding Ability
   3.1.2.1.6. Form 5; Acknowledgment of Addenda;
   3.1.2.1.7. Form 6; Proponent Contact Directory;

3.1.2.1.8. Form 7; Reference List; and
3.1.2.1.9. Form 8; **N/A**
3.1.2.1.10. Form 9; Required Submittal Checklist

NOTE: Every space on every form must be completed. If the form requires a Notary, please comply. Failure to complete each form as required may deem you non-responsive. If there are any questions regarding any form, it is strongly recommended that you submit your question(s) to the Contracting Officer listed in the RFP prior to the deadline for submitting questions.

3.1.2.2. Forms attached to Services Agreement attached to this RFP at Part 5:
3.1.2.2.1. Exhibit A.1-Cost Proposal **(This should be included in a separate sealed envelope and labeled "Cost Proposal");**
3.1.2.2.2. Appendix A; City's OCC Programs; Office of Contract Compliance Submittals;
3.1.2.2.3. Proponent must provide a copy of a current certificate of insurance evidencing any existing commercial general liability policies issued for Proponent, if any. For purposes of this section, "Proponent" shall mean an individual, corporation or other corporate entity submitting a proposal in connection with this solicitation, including each joint venture partner if Proponent is a joint venture.

3.2. Information Requirements Details: The following is a more detailed summary of the requirements of certain portions of the Informational Proposal. Each Outlined Item should be included in your Proposals and tabbed as indicated:

3.2.1. **Executive Summary (Tab in Volume I)**

3.2.1.1. Cover Letter: The executive summary must include a letter with the Proponent's name, address, telephone number and fax number, signed by a person authorized to act on behalf of the Proponent. The letter should also include the name, title, address, e-mail address, telephone number and fax number of the person signing the letter and the name, title, address, e-mail address, telephone number and fax number of one (1) contact person to whom all future correspondence and/or communications may be directed by the City concerning this procurement, if that person is different from the person executing the letter. The letter should also designate the type of business entity that proposes to enter into a Contract with the City and the identity of any other business entities that will comprise the Proponent and include a brief history of the Proponent and statement of the Proponent's approach to providing the services solicited in this RFP.

3.2.1.2. Detailed Executive Summary: The purpose of the Detailed Executive Summary is to provide an overview of the Proponent's qualifications

to accomplish the project. At a minimum, the Detailed Executive Summary must contain the following information:

3.2.1.2.1. Complete legal name of the Proponent and the name of the legal entities that comprise the Proponent. The Proponent must provide the domicile where each entity comprising it is organized, including entity name, brief history of the entity, contact name, address, phone number, and facsimile number, as well as the legal structure of the entity and a listing of major satellite offices;

3.2.1.2.2. The general and specific capabilities and experience of the Proponent's Team. Each Proponent must identify examples where team members have worked together to complete a project. Discuss how the team was formed and how the team will function as an integrated unit in providing services to the City;

3.2.1.2.3. A description of the Proponent's plan for complying with the City's EBO goals. This section should include detailed information regarding the essential subcontractors/ subconsultants the Proponent intends to use and should indicate the roles and responsibilities these firms will be assigned. Each Proponent must provide a letter from each essential subcontractor/subconsultant indicating that the firm concurs with the role and responsibility Proponent has described; and

3.2.1.2.4. Litigation Disclosure Statement. A declarative statement as to whether the Proponent or any member of the Proponent's team has an open dispute with the City or is involved in any litigation associated with work in progress or completed work in either the private or public sector during the past five (5) years.

3.2.2. **Organizational Structure (Tab in Volume I):**

The Proponent's Organizational Structure Section of the Proposal should introduce the proposed Proponent's team by:

3.2.2.1. providing the Proponent's Management Organizational Chart both graphically and in narrative format. The Organizational chart and narrative should provide a description of the Proponent's views on how it will organizationally provide the Services, as well as depict the relationship of its key personnel roles to that of the Principal-in-Charge and other key members of the management team;

3.2.2.2. providing a descriptive of how this organizational structure will facilitate managing the Services requested and how an efficient flow of information will be realized from the organizational structure; and

3.2.2.3. providing the names of proposed candidates for each function on the chart.

3.2.2.4. What kind of geographical classification applies to your company.

- Local (operates in only one (1) city or state)
- Regional (operates in only one geographical area)
- Multi-regional (operates in only one region, but not national)
- National (provides service across the U.S. only)
- International (conducts business in the U.S. and abroad)

3.2.3. **Experience and Qualifications of Key Personnel (Tab in Volume I):**

3.2.3.1. Identify and provide resumes for the individuals that the Proponent will use as Key Personnel. Key Personnel may include but not limited to the following:

3.2.3.1.1. Project Manager – Minimum of fifteen (15) years of experience

3.2.3.1.2. Project Superintendent – Minimum of fifteen (15) years of experience

3.2.3.1.3. Project Engineer - Minimum of five (5) years of experience

3.2.3.1.4. Safety Engineer – Minimum of eight (8) years of experience

3.2.3.1.5. Project Scheduler – Minimum of seven (7) years of experience

3.2.3.2. Resumes should be organized as follows:

3.2.3.2.1. Name and Title;

3.2.3.2.2. Professional Background;

3.2.3.2.3. Current and Past Relevant Employment;

3.2.3.2.4. Education;

3.2.3.2.5. Certifications;

3.2.3.2.6. List of (4) Relevant projects, including:

3.2.3.2.6.1. client name;

3.2.3.2.6.2. project description;

3.2.3.2.6.3. project value;

3.2.3.2.6.4. role of the individual;

3.2.3.2.6.5. the original contract schedule to start and complete the project; and

3.2.3.2.6.6. the actual start and completion dates of the project.

3.2.3.3. Submission of these names constitutes a commitment to use these individuals if the Proponent is selected, and changes may be made only with the prior written consent of the City. In the event there is a need to replace key team members during the course of the project, Proponent must describe its back-up personnel plan.

3.2.4. **Overall Experience, Qualifications and Performance on Similar Projects (Tab in Volume I):**

3.2.4.1. Proponents should detail their relevant experience, qualifications, performance, and capabilities for performing the services outlined

in the Exhibit A; Scope of Work. Proponents should also include work product examples from similar projects.

3.2.4.2. A detailed history for Proponent's and subcontractor's or subconsultants' work performing the services outlined in the Exhibit A.

3.2.4.3. Four (4) letters of reference (on the reference's letterhead) where the Proponent implemented similar projects. Include a contact name, address, phone number, email address and project value (minimum project budget of two-hundred and fifty thousand dollars ($250,000.00).

3.2.5. **Management Plan and Project Approach (Tab in Volume I):** Based on the Proponent's Organizational structure, describe how the Proponent will manage the Services, specifically addressing the following:

3.2.5.1. Proponent's approach to team leadership;

3.2.5.2. How the Proponent will:

3.2.5.2.1. ensure proper communications among pertinent project team members;

3.2.5.2.2. assure the City that the Scope of Services will be kept within any established time and budget constraints;

3.2.5.2.3. establish and maintain the necessary cooperative relationships;

3.2.5.2.4. coordinate all necessary project activities within that team relationship;

3.2.5.2.5. identify the tools that are intended to be used to manage these project elements; and

3.2.5.2.6. Proponent's proposed method to:

A. Identify and resolve issues during the project duration.

B. Detail how emergencies will be handled, including response times for emergencies (include a map of Proponent's local office in relation to the City's center.)

C. Make critical decisions.

3.2.5.2.7. Describe the management process the Proponent will implement to ensure all work and services performed are to the highest quality. The approach should include a description of the Proponent's process as it pertains to equipment, methods, techniques and procedures used to ensure accurate and comprehensive set of deliverable products. Describe the proponent corrective action plan. Describe how the Proponent's organization structure supports this plan and clearly identify responsible and accountable parties.

3.2.5.2.8. Proponent must provide a description of the approach to the Scope of Service. All proposals must be comprehensive

and include a detailed pilot project timeline and complete project timeline to go along with their narrative.

3.3. **Cost Proposal.** Each Proponent must submit a Cost Proposal using the form provided by the City at Part 5; Services Agreement; Exhibit A.1-Cost Proposal. The Cost Proposal must support the Scope of Services contained in the RFP and fully encompass all activities in the Proponent's Proposal. The Cost Proposal shall serve as the baseline for final fee negotiation with the City. **Submit one (1) original, marked "Original" and seven (7) copies in a separate envelope.**

4. Submission of Proposals:

A Proposal must be submitted in sealed envelope(s) or package(s) and the outside of the envelope(s) or package(s) must clearly identify the name of the project: **FC-8412; Annual Contract for Sanitary Sewer Repair Services** and the time and date specified for receipt. The name and address of the Proponent must also be clearly printed on the outside envelope or package. All Proposals must be submitted to:

Adam L. Smith, Esq., CPPO, CPPB, CPPM, CPP
CIPC, CISCC, CIGPM
Chief Procurement Officer
Department of Procurement
55 Trinity Avenue, S.W.
City Hall South, Suite 1900
Atlanta, Georgia 30303-0307

4.1. A Proponent is required to submit one (1) original, marked "Original" and seven (7) copies of its Informational Proposal. Each Informational Proposal must be submitted on 8½" x 11" single-sided, double-spaced, typed pages, using 12–point font size and such pages must be inserted in a standard three-hole ring binder. Each Informational Proposal must contain an index and separate sections for the information requirements set forth in this RFP, as well as for the forms required to be submitted.

In addition to the hard copy submission, each Proponent must submit two (2) digital versions of its Proposal in Adobe Portable Document Format (PDF) on compact disk (CDs). CD One (1) version should be a duplicate of the hard copy of the Proposal with no deviations in order or layout of the hard copy proposal. CD Two (2) version should be a redacted version of the hard copy Proposal. Please refer to the Georgia Open Records Acts (O.C.G.A. § 50-18-72) for information not subject to public disclosure.

The City assumes no liability for differences in information contained in the Proponent's printed Proposal and that contained on the CDs. In the event of a discrepancy, the City will rely upon the information contained in the Proponent's printed material (Hard Copy). Each CD should be labeled with the Project Number, Project Name, and the CD Number.

4.2. A Proponent is required to submit, in a separate, sealed envelope, clearly marked "Cost Proposal", one (1) original, marked "Original" and seven (7) copies of its Cost Proposal with its Information Proposal.

5. Responsiveness and responsibility for each Proponent can be observed as the following:

A. The responsiveness of a Proponent is determined by, but not limited to, the following:
   1. A timely and effective delivery of all services, materials, documents, and/or other information required by the City;
   2. The completeness of all material, documents and/or information required by the City; and
   3. The notification of the City of methods, services, supplies and/or equipment that could reduce cost or increase quality.

B. The responsibility of a Proponent is determined by, but not limited to, the following:
   1. The ability, capacity and skill of the Proponent to perform the Agreement or provide the Work required;
   2. The capability of the Proponent to perform the Agreement or provide the Work promptly, or within the time specified without delay or interference;
   3. The character, integrity, reputation, judgment, experience and efficiency of the Proponent;
   4. The quality of performance of previous contracts or work;
   5. The previous existing compliance by the Proponent with laws and ordinances relating to the Agreement or Work;
   6. The sufficiency of the financial resources and ability of the Proponent to perform Agreement for providing the Work;
   7. The quality, availability and adaptability of the supplies or contractual Work to the particular use required; and
   8. The successful Proponent shall assume full responsibility for the conduct of his agents and/or employees during the time such agents or employees are on the premises for the purpose of performing the Work herein specified.

6. The City will carefully evaluate the responsiveness and responsibility of each Proponent. The selection criteria shall include but not be limited to, those factors contained in subsection 2-1188(k) of the City of Atlanta Code of Ordinances; and the following (the responsibility is solely on the Proponent to adhere to all evaluation factors as outlined in the City of Atlanta Code of Ordinances).

PART III

Evaluation of Proposals

Part 3; Evaluation of Proposals

All Proposals will be evaluated in accordance with the City's Code of Ordinances and the criteria specified on the Percentage Evaluation Form and considering the information required to be submitted in each Proposal. An Evaluation Committee will review the Proposals in accordance with this RFP.

All Proposals will be evaluated using the following Evaluation Form**:**

RELATIVE WEIGHT	GRADED ITEM	SCORE
5	Cover Letter/Executive Summary	
25	Overall Qualification and Performance on Previous Projects	
20	Key Personnel/Organizational Structure	
10	Financial Capability	
25	Cost Proposal	
15	OCC Programs	
100%	TOTAL SCORE	

PART IV

Required Submittals Forms

Required Submittal (FORM 1)

Illegal Immigration Reform and Enforcement Act Forms (Page 1 of 3)

INSTRUCTIONS TO PROPONENTS:

All Proponents must comply with the Illegal Immigration Reform and Enforcement Act of 2011, O.G.G.A § 13-10-90, et seq. (IIREA). IIREA was formerly known as the Georgia Security and Immigration Compliance Act or GSICA. Proponents must familiarize themselves with IIREA and are solely responsible for ensuring compliance. Proponents must not rely on these instructions for that purpose. They are offered only as a convenience to assist Proponents in complying with the requirements of the City's procurement process and the terms of this RFP.

1. The attached Contractor Affidavit must be filled out COMPLETELY and submitted with the Proposal prior to Proposal due date.

2. The Contractor Affidavit must contain an active Federal Work Authorization Program (E-Verify) User ID Number and Date of Registration.

3. Where the business structure of a Proponent is such that Proponent is required to obtain an Employer Identification Number (EIN) from the Internal Revenue Service, Proponent must complete the Contractor Affidavit on behalf of, and provide a Federal Work Authorization User ID Number issued to, the Proponent itself. Where the business structure of a Proponent does not require it to obtain an EIN, each entity comprising Proponent must submit a separate Contractor Affidavit.

   Example 1, ABC, Inc. and XYZ, Inc. form and submit a Proposal as Happy Day, LLC. Happy Day, LLC must enroll in the E-verify program and submit a single Contractor Affidavit in the name of Happy Day, LLC which includes the Federal Work Authorization User ID Number issued to Happy Day, LLC.

   Example 2, ABC, Inc. and XYZ, Inc. execute a joint venture agreement and submit a Proposal under the name Happy Day, JV. If, based on the nature of the JV agreement, Happy Day, JV. is not required to obtain an Employer Identification Number from the IRS, the Proposal submitted by Happy Day, JV must include both a Contractor Affidavit for ABC, Inc. and a Contractor Affidavit for XYZ, Inc.

4. All Contractor Affidavits must be executed by an authorized representative of the entity named in the Affidavit.

5. All Contractor Affidavits must be duly notarized.

6. All Contractor Affidavits must be submitted with the Proponent's Response to the RFP.

7. Subcontractor and sub-subcontractor affidavits are not required at the time of proposal submission, but will be required at contract execution or in accordance with the timelines set forth in IIREA.

Required Submittal (FORM 1)

Illegal Immigration Reform and Enforcement Act Forms (Page 2 of 3)

Contractor Affidavit under O.C.G.A. § 13-10-91(b)(1)

By executing this affidavit, the undersigned contractor verifies its compliance with O.C.G.A. § 13-10-91, stating affirmatively that the individual, firm or corporation which is engaged in the physical performance of services on behalf of the City of Atlanta has registered with, is authorized to use and uses the federal work authorization program commonly known as E-Verify, or any subsequent replacement program, in accordance with the applicable provisions and deadlines established in O.C.G.A. § 13-10-91. Furthermore, the undersigned contractor will continue to use the federal work authorization program throughout the contract period and the undersigned contractor will contract for physical performance of services in satisfaction of such contract only with subcontractors who present an affidavit to the contractor with the information required by O.C.G.A. § 13-10-91(b). Contractor hereby attests that its federal work authorization user identification number and date of authorization are as follows:

_____ _____

Federal Work Authorization User Identification Number Date of Authorization

Name of Contractor: _____

Name of Project: FC-8412, Annual Contract for Sanitary Sewer Repair Services

Name of Public Employer: City of Atlanta

I hereby declare under penalty of perjury that the forgoing is true and correct.

Executed on _____, ____, 20__ in _____(city), _____(state)

_____

Signature of Authorized Officer or Agent

_____

Printed name and Title of Authorized Officer or Agent

SUBSCRIBED AND SWORN BEFORE
ME ON THIS THE ___, DAY OF _____, 20____

_____

NOTARY PUBLIC
My Commission Expires: _____

Required Submittal (FORM 1)

Illegal Immigration Reform and Enforcement Act Forms (Page 3 of 3)

Subcontractor Affidavit under O.C.G.A. § 13-10-91(b)(3)

By executing this affidavit, the undersigned subcontractor verifies its compliance with O.C.G.A. § 13-10-91, stating affirmatively that the individual, firm or corporation which is engaged in the physical performance of services under a contract with (_____ (name of contractor)) on behalf of the City of Atlanta has registered with, is authorized to use and uses the federal work authorization program commonly known as E-Verify, or any subsequent replacement program, in accordance with the applicable provisions and deadlines established in O.C.G.A. § 13-10-91. Furthermore, the undersigned subcontractor will continue to use the federal work authorization program throughout the contract period and the undersigned subcontractor will contract for the physical performance of services in satisfaction of such contract only with sub-subcontractors who present an affidavit to the subcontractor with the information required by O.C.G.A. § 13-10-91(b). Additionally, the undersigned subcontractor will forward notice of the receipt of an affidavit from a sub-subcontractor to the contractor within five business days of receipt. If the undersigned subcontractor receives notice of receipt of an affidavit from any sub-subcontractor that has contracted with a sub-subcontractor to forward, within five business days of receipt, a copy of such notice to the contractor. Subcontractor hereby attests that its federal work authorization user identification number and date of authorization are as follows:

_____ _____

Federal Work Authorization User Identification Number Date of Authorization

Name of Subcontractor: _____

Name of Project: FC-8412, Annual Contract for Sanitary Sewer Repair Services

Name of Public Employer: City of Atlanta

I hereby declare under penalty of perjury that the forgoing is true and correct.

Executed on _____, ____, 20__ in _____(city), _____(state)

_____

Signature of Authorized Officer or Agent

_____

Printed name and Title of Authorized Officer or Agent

SUBSCRIBED AND SWORN BEFORE
ME ON THIS THE ___, DAY OF _____, 20_____

_____

NOTARY PUBLIC
My Commission Expires: _____

Required Submittal (FORM 2)
Contractor Disclosure Form (Page 1 of 7)

DEFINITIONS FOR THE PURPOSES OF THIS DISCLOSURE AFFIDAVIT

"Affiliate"	Any legal entity that, directly or indirectly through one of more intermediate legal entities, controls, is controlled by or is under common control with the Respondent or a member of Respondent.
"Contractor"	Any person or entity having a contract with the city.
"Control"	The controlling entity: (i) possesses, directly or indirectly, the power to direct or cause the direction of the management and policies of the controlled entity, whether through the ownership of voting securities or by contract or otherwise; or (ii) has direct or indirect ownership in the aggregate of fifty one (51%) or more of any class of voting or equity interests in the controlled entity.
"Respondent"	Any individual or entity that submits a proposal in response to a solicitation. If the Respondent is an individual, then that individual must complete and sign this Disclosure Affidavit where indicated. If the Respondent is an entity, then an authorized representative of that entity must complete and sign this Disclosure Affidavit where indicated. **If the Respondent is a newly formed entity (formed within the last three years), then an authorized representative of that entity must complete and sign this Disclosure Affidavit where indicated, and each of the members or owners of the entity must also complete and sign separate Disclosure Affidavits where indicated.**

Instructions: Provide the following information for the entity or individual completing this Statement (the "Individual/Entity").

A. Basic Information:

1. Name of Individual/Entity responding to this solicitation:

2. Name of the authorized representative for the responding Entity:

B. Individual/Entity Information:

1. Principal Office Address:

2. Telephone and Facsimile Numbers:

3. E-Mail Address:

4. Name and title of Contact Person for the Individual/Entity:

5. Is the individual/Entity authorized to transact business in the state of Georgia?

☐ Yes **(Attach Certificate of Authority to transact business in Georgia from Georgia Secretary of State.)**

☐ No

C. Questionnaire

If you answer "YES" to any of the questions below, please indicate the name(s) of the person(s), the nature, and the status and/or outcome of the information, indictment, conviction, termination, claim or litigation, the name of the court and the file or reference number of the case, as applicable. Any such information should be provided on a separate page, attached to this form and submitted with your Proposal.

1. Please describe the general development of the Respondent's business during the past ten (10) years, or such shorter period of time that the Respondent has been in business.

	YES	NO
2. Are there any lawsuits, administrative actions or litigation to which Respondent is currently a party or has been a party (either as a plaintiff or defendant) during the past ten (10) years based upon fraud, theft, breach of contract, misrepresentation, safety, wrongful death or other similar conduct?	☐	☐
3. If "yes" to question number 2, were any of the parties to the suit a bonding company, insurance company, an owner, or otherwise? If so, attach a sheet listing all parties and indicate the type of company involved.	☐	☐
4. Has the Respondent been charged with a criminal offense within the last ten (10) years?	☐	☐
5. Has the Respondent received any citations or notices of violation from any government agency in connection with any of Respondent's work during the past ten (10) years (including OSHA violations)? Describe any citation or notices of violation which Respondent received.	☐	☐

6. Please state whether any of the following events have occurred in the last ten (10) years with respect to the Respondent. If any answer is yes, explain fully the circumstances surrounding the subject matter of the affirmative answer:

	YES	NO
(a) Whether Respondent, or Affiliate currently or previously associated with Respondent, has ever filed a petition in bankruptcy, taken any actions with respect to insolvency, reorganization, receivership, moratorium or assignment for the benefit of creditors, or otherwise sought relief from creditors?	☐	☐
(b) Whether Respondent was subject of any order, judgment or decree not subsequently reversed, suspended or vacated by any court permanently enjoining Respondent from engaging in any type of business practice?	☐	☐
(c) Whether Respondent was the subject of any civil or criminal proceeding in which there was a final adjudication adverse to Respondent which directly arose from activities conducted by Respondent.	☐	☐

Required Submittal (FORM 2)
Contractor Disclosure Form (Page 3 of 7)

7. Has any employee, agent or representative of Respondent who is or will be directly involved in the project, in the last ten (10) years:

	YES	NO
(a) directly or indirectly, had a business relationship with the City?	☐	☐
(b) directly or indirectly, received revenues from the City?	☐	☐
(c) directly or indirectly, received revenues from conducting business on City property or pursuant to any contract with the City?	☐	☐
8. Whether any employee, agent, or representative of Respondent who is or will be directly involved in the project has or had within the last ten (10) years a direct or indirect business relationship with any elected or appointed City official or with any City employee?	☐	☐
9. Whether Respondent has provided employment or compensation to any third party intermediary, agent, or lobbyist to directly or indirectly communicate with any City official or employee, or municipal official or employee in connection with any transaction or investment involving your firm and the City?	☐	☐
10. Whether Respondent, or any agent, officer, director, or employee of your organization has solicited or made a contribution to any City official or member, or to the political party or political action committee within the previous five (5) years?	☐	☐
11. Has the Respondent or any agent, officer, director, or employee been terminated, suspended, or debarred (for cause or otherwise) from any work being performed for the City or any other Federal, State or Local Government?	☐	☐
12. Has the Respondent, member of Respondent's team or officer of any of them (with respect to any matter involving the business practice or activities of his or her employer been notified within the five (5) years preceding the date of this offer that any of them are the target of a criminal investigation, grand jury investigation, or civil enforcement proceeding?	☐	☐

13. Please identify any Personal or Financial Relationships that may give rise to a conflict of interest as defined below *[Please be advised that you may be ineligible for award of contract if you have a personal or financial relationship that constitutes a conflict of interest that cannot be avoided]*:

	YES	NO
(a) Personal relationships: executives, board members and partners in firms submitting offers must disclose familial relationships with employees, officers and elected officials of the City of Atlanta. Familial relationships shall include spouse, domestic partner registered under section 94-133, mother, father, sister, brother, and natural or adopted children of an official or employee.	☐	☐
(b) Financial relationships: Respondent must disclose any interest held with a City employee or official, or family members of a City employee or official, which may yield, directly or indirectly, a monetary or other material benefit to the Respondent or the Respondent's family members. Please describe:	☐	☐

_____

_____

_____

D. REPRESENTATIONS

Anti-Lobbying Provision. All respondents, including agents, employees, representatives, lobbyists, attorneys and proposed partner(s), subcontractor(s) or joint venturer(s), will refrain, under penalty of the respondent's disqualification, from direct or indirect contact for the purpose of influencing the selection or creating bias in the selection process with any person who may play a part in the selection process.

Certification of Independent Price Determination/Non-Collusion. Collusion and other anticompetitive practices among offerors are prohibited by city, state and federal laws. All Respondents shall identify a person having authority to sign for the Respondent who shall certify, in writing, as follows:

> "I certify that this bid proposal is made without prior understanding, agreement, or connection with any corporation, firm, or person submitting an bid or offer for the same supplies, labor, services, construction, materials or equipment to be furnished or professional or consultant services, and is in all respects fair and without collusion or fraud. I understand collusive bidding is a violation of city, state and federal law and can result in fines, prison sentences, and civil damages awards. By signing this document, I agree to abide by all conditions of this solicitation and offer and certify that I am authorized to sign for this Respondent/Offeror."

Certify Satisfaction of all Underlying Obligations. (If Applicable) If a Contract is awarded through this solicitation, then such Contractor should know that before final payment is made to a Contractor by the City, the Contractor shall certify to the City in writing, in a form satisfactory to the City, that all subcontractors, materialmen suppliers and similar firms or persons involved in the City contract have been paid in full at the time of final payment to the Contractor by the City or will be paid in full utilizing the monies constituting final payment to the Contractor.

Confidentiality . Details of the proposals will not be discussed with other respondents during the selection process. Respondent should be aware, however, that all proposals and information submitted therein may become subject to public inspection following award of the contract. Each respondent should consider this possibility and, where trade secrets or other proprietary information may be involved, may choose to provide in lieu of such proprietary information, an explanation as to why such information is not provided in its proposal. However, the respondent may be required to submit such required information before further consideration.

Equal Employment Opportunity (EEO) Provision. All bidders or offerors will be required to comply with sections 2-1200 and 2-1414 of the City of Atlanta Code of Ordinances, as follows: During the performance of the agreement, the Contractor agrees as follows:

a. The Contractor shall not discriminate against any employee, or applicant for employment, because of race, color, creed, religion, sex, domestic relationship status, parental status, familial status, sexual orientation, national origin, gender identity, age, disability, or political affiliation. As used here, the words "shall not discriminate" shall mean and include without limitation the following:

Recruited, whether by advertising or other means; compensated, whether in the form of rates of pay, or other forms of compensation; selected for training, including apprenticeship; promoted; upgraded; demoted; downgraded; transferred; laid off; and terminated.

The Contractor agrees to and shall post in conspicuous places, available to employees and applicants for employment, notices to be provided by the contracting officers setting forth the provisions of the EEO clause.

b. The Contractor shall, in all solicitations or advertisements for employees, placed by or on behalf of the Contractor, state that all qualified applicants will receive consideration for employment without regard to race, color, creed, religion, sex, domestic relationship status, parental status, familial status, sexual orientation, national origin, gender identity, age, disability, or political affiliation.

c. The Contractor shall send to each labor union or representative of workers with which the Contractor may have a collective bargaining agreement or other contract or understanding a notice advising the labor union or workers' representative of the Contractor's commitments under the equal employment opportunity program of the City of Atlanta and under the Code of Ordinances and shall post copies of the notice in conspicuous places available to employees and applicants for employment. The Contractor shall register all workers in the skilled trades who are below the journeyman level with the U.S. Bureau of Apprenticeship and Training.

d. The Contractor shall furnish all information and reports required by the contract compliance officer pursuant to the Code of Ordinances, and shall permit access to the books, records, and accounts of the Contractor during normal business hours by the contract compliance officer for the purpose of investigation so as to ascertain compliance with the program.

e. The Contractor shall take such action with respect to any subcontractor as the city may direct as a means of enforcing the provisions of paragraphs (a) through (h) herein, including penalties and sanctions for noncompliance; provided, however, that in the event the Contractor becomes involved in or is threatened with litigation as a result of such direction by the city, the city will enter into such litigation as is necessary to protect the interest of the city and to effectuate the equal employment opportunity program of the city; and, in the case of contracts receiving federal assistance, the Contractor or the city may request the United States to enter into such litigation to protect the interests of the United States.

f. The Contractor and its subcontractors, if any, shall file compliance reports at reasonable times and intervals with the city in the form and to the extent prescribed by the contract compliance officer. Compliance reports filed at such times directed shall contain information as to employment practices, policies, programs and statistics of the Contractor and its subcontractors.

g. The Contractor shall include the provisions of paragraphs (a) through (h) of this equal employment opportunity clause in every subcontract or purchase order so that such provisions will be binding upon each subcontractor or vendor.

h. A finding, as hereinafter provided, that a refusal by the Contractor or subcontractor to comply with any portion of this program, as herein provided and described, may subject the offending party to any or all of the following penalties:

(1) Withholding from the Contractor in violation all future payments under the involved contract until it is determined that the Contractor or subcontractor is in compliance with the provisions of the contract;

(2) Refusal of all future bids for any contract with the City of Atlanta or any of its departments or divisions until such time as the Contractor or subcontractor demonstrates that there has been established and there shall be carried out all of the provisions of the program as provided in the Code of Ordinances;

(3) Cancellation of the public contract;

(4) In a case in which there is substantial or material violation of the compliance procedure herein set forth or as may be provided for by the contract, appropriate proceedings may be brought to enforce those provisions, including the enjoining, within applicable law, of Contractors, subcontractors or other organizations, individuals or groups who prevent or seek to prevent directly or indirectly compliance with the policy as herein provided.

Prohibition on Kickbacks or Gratuities/Non-Gratuity. The undersigned acknowledges the following prohibitions on kickbacks and gratuities:

a. It is unethical for any person to offer, give or agree to give any employee or former employee a gratuity or an offer of employment in connection with any decision, approval, disapproval, recommendation, preparation or any part of a program requirement or a purchase request, influencing the content of any specification or procurement standard, rendering of advice, investigation, auditing or in any other advisory capacity in any proceeding or application, request for ruling, determination, claim or controversy or other particular matter pertaining to any program requirement or a contract or subcontract or to any solicitation or proposal therefor.

b. It is unethical for any employee or former employee to solicit, demand, accept or agree to accept from another person a gratuity or an offer of employment in connection with any decision, approval, disapproval, recommendation, preparation or any part of a program requirement or a purchase request, influencing the content of any specification or procurement standard, rendering of advice, investigation, auditing or in any other advisory capacity in any proceeding or application, request for ruling, determination, claim or controversy or other particular matter pertaining to any program requirement or a contract or subcontract or to any solicitation or proposal therefor.

c. It is also unethical for any payment, gratuity or offer of employment to be made by or on behalf of a subcontractor under a contract to the prime Contractor or higher tier subcontractor or any person associated therewith as an inducement for the award of a subcontract or order.

Declaration

Under penalty of perjury, I declare that I have examined this Disclosure Form and Questionnaire and all attachments to it, if applicable, and, to the best of my knowledge and belief all statements contained herein and in any attachments, if applicable, are true, correct and complete.

I certify that this offer is made without prior understanding, agreement, or connection with any corporation, firm, or person submitting an offer for the same supplies, services, construction, or professional or consultant services, and is in all respects fair and without collusion or fraud. I understand collusive bidding is a violation of city, state and federal law and can result in fines, prison sentences, and civil damages awards. I agree to abide by all conditions of this solicitation and offer and certify that I am authorized to sign for this Respondent.

Sign here if you are an individual:

Printed Name:

Signature: _____

Date: _____

Subscribed and sworn to or affirmed by _____ (name) this ___day of _____ _, 20__.

_____

Notary Public of _____(state)

My commission expires: _____

Sign here if you are an authorized representative of a responding entity or partnership:

Printed Name of Entity or Partnership: _____

Signature of authorized representative: _____

Title: _____

Date: _____, 20___

Subscribed and sworn to or affirmed by _____(name), as the _____(title) of _____(entity or partnership name) this _____day of _____, 20___.

_____

Notary Public of _____(state)

My commission expires: _____

Required Submittal (FORM 3)

Proponent Financial Disclosure (Page 1 of 5)

Instructions: It is necessary for the City to evaluate, verify, and understand the Proponent's financial capability and stability to undertake and perform the Services contemplated in this Solicitation. To accomplish this task, the Proponent must provide accurate and legible financial disclosures to the City as requested below.

A "Proponent" is an individual, entity or partnership submitting a proposal or Proposal in response to a Solicitation.

1. If the Proponent is an individual, financial disclosures for that individual must be provided.

2. If the Proponent is an entity or partnership, financial disclosures for that entity or partnership must be provided.

3. If the Proponent is a newly formed entity or partnership (formed within the last three years), financial disclosures for that entity or partnership must be provided together with full financial disclosure from the entity's or partnership's owners. Financial Disclosure includes a full response to all questions and requests for documentation listed in this Form.

For example, if the Proponent is a newly formed entity (formed within the last three years) made up of two separate entities (e.g., a majority interest owner and a minority interest owner), then financial disclosure is required from the Proponent entity, and financial disclosure is also required from each of the two owners (majority entity owner and minority entity owner) as well.

The Proponent (and its owners, if applicable) must submit hard copies of all financial disclosures in response to this Form.

Required Submittal (FORM 3)

Proponent Financial Disclosure (Page 2 of 5)

Part A - General Information:

Name of the Proponent: _____

Name of individual, entity or partnership completing this Form: _____

Relationship of individual, entity or partnership completing this Form to the Proponent: _____

Contact information of individual, entity or partnership completing this Form: _____

Address _____

Phone Number(s) _____

Email: _____

Required Submittal (FORM 3)

Proponent Financial Disclosure (Page 3 of 5)

Part B: Financial Information:

1. The Proponent, and its owners, if applicable, should demonstrate its financial capability and stability by selecting and providing documentation from one of the following three groups of requests (see below). Please circle which group, (a), (b), or (c), is selected and provide the supporting documentation with the proposal/Proposal.

(a) Financial statements for the three (3) most recent consecutive fiscal years, audited by a Certified Public Accountant ("CPA"), including:

(i) Income Statement;
(ii) Balance Sheet; and
(iii) Statement of Cash Flows.

(b) Financial statements for the three (3) most recent consecutive fiscal years, either reviewed or compiled by a Certified Public Accountant ("CPA"), including:

(i) Income Statement;
(ii) Balance Sheet; and
(iii) Satisfactory proof of Proponent's ability to obtain a Performance Bond for the amount described in Appendix B, if applicable.

(c) Unaudited, self-prepared financial statements for the three (3) most recent consecutive fiscal years, including:

(i) Income Statement;
(ii) Balance Sheet;
(iii) Satisfactory proof of Proponent's ability to obtain a Performance Bond for the amount described in Appendix B, if applicable;
(iv) Two (2) banks or other institutional lenders' references; and
(v) Dunn and Bradstreet report for the last two (2) years.

Required Submittal (FORM 3)

Proponent Financial Disclosure (Page 4 of 5)

2. Fill in the blanks below to provide a summary of all of the Proponent's assets and liabilities for the three (3) most recent years (calculated from the date of the end of the fiscal year).

ALL FIGURES BELOW MUST BE REPRESENTED IN U.S. CURRENCY ($).

Standard currency of Proponent's Financial Statements: _____

The exchange rate used: _____ = US $_____

Most recent three (3) years

	Year: 2012 (Thousands)	**Year: 2013** (Thousands)	**Year: 2014** (Thousands)
Current Assets	$.....	$.....	$.....
Current Liabilities	$.....	$.....	$.....
Property & Equip.	$.....	$.....	$.....
Working Capital	$.....	$.....	$.....
Sales/ Revenue	$.....	$.....	$ .....
Total Assets	$.....	$.....	$.....
Total Liabilities	$.....	$.....	$.....
Interest Charges	$.....	$.....	$.....
Net Income	$.....	$.....	$.....
Net-Worth	$.....	$.....	$.....

3. Do you plan to use or require an open line of credit for the project? Yes or No.

If yes, the Proponent must provide the source of the line of credit on bank letterhead for the bank providing the line of credit. The bank contact information must include: contact name, title, address, telephone, fax and e-mail address.

Required Submittal (FORM 3)

Proponent Financial Disclosure (Page 5 of 5)

Declaration

Under penalty of perjury, I declare that I have examined this Affidavit Disclosure form and all attachments to it, if applicable, and, to the best of my knowledge and belief, and all statements contained in it and all attachments, if applicable, are true, correct and complete.

Whether you are an individual executing this form or you are an authorized representative of an entity executing this form, the person signing below must sign or affirm in the presence of a Notary Public. The Notary Public's signature and seal must be provided, together with the date of the notarial act.

Sign here if you are an individual:

Printed Name: _____
Signature: _____
Date: _____, 20___.

Subscribed and sworn to or affirmed by _____ (name) this _____ day of _____, 20___.

_____
Notary Public of _____(state)
My commission expires: _____

Sign here if you are an authorized representative of a responding entity:

Printed Name of Entity: _____
Signature of authorized representative: _____
Title: _____
Date: _____, 20___.

Subscribed and sworn to or affirmed by _____ (name), as the _____ (title) of _____ (entity name) this _____ day of _____, 20___.

_____
Notary Public of _____(state)
My commission expires: _____

Required Submittal (FORM 4.1)

Certification of Insurance Ability Instructions:

Offerors **MUST** submit **a completed copy of this form executed by their insurance company**. Failure to submit completed form will result in the Offeror being deemed non-responsive.

I, _____ [*insert an individual's name*], on behalf of _____ [*insert insurance company full name*], a _____ [*insert type of entity LLC, LLP, corporation, etc.*](“**Insurer**”), hereby represent and certify each of the following to the City of Atlanta, a municipal corporation of the State of Georgia (“**City**”) on this _____ day of _____, 20____ [*insert date*]:

(a) Insurer is licensed by the Insurance and Safety Fire Commissioner of the State of Georgia to transact insurance business in the State of Georgia;

(b) Insurer has reviewed the Agreement attached to the solicitation for Project Number FC-8412, Annual Contract for Sanitary Sewer Repair Services (**“Project”**) and its corresponding **Appendix for Insurance Requirements;**

(c) Insurer certifies that if, as of the date written above, (“**Offeror**”) was selected as the successful Offeror for the Project, Insurer would provide insurance to Offeror for this Project in accordance with the terms set forth in the corresponding **Appendix for Insurance Requirements**; and

PLEASE NOTE: If this Form 4.1 is executed by an Attorney-in-Fact, then Insurer must attach a copy of a duly executed Power-of-Attorney evidencing such authority in addition to correctly completing this Form 4.1. If Offeror is unable to provide City with insurance that comply with the terms of the corresponding Appendix for Insurance Requirements within ten (10) days of receiving notice of intent to award the Project from the City, the City may, in its sole discretion, retain Offeror's security submitted with its offer and/or disqualify Offeror from further consideration for the award of the Agreement.

By executing this certification, Insurer represents that all of the information provided by Insurer herein is true and correct as of the date set forth above.

Insurer: [*insert company name on line provided below*]

_____

By:_____

Print Name:_____

Title:_____

_____
Corporate Secretary/Assistant Secretary
(Seal)

Required Submittal (FORM 4.2)

Certification of Bonding Ability Instructions:

Offerors **MUST** submit **a completed copy of this form executed by their surety.** Failure to submit completed form from will result in the Offeror being deemed non-responsive.

I, _____ [*insert an individual's name*], on behalf of _____ [*insert surety company full name*], a _____ [*insert type of entity LLC, LLP, corporation, etc.*](“**Surety**”), hereby represent and certify each of the following to the City of Atlanta, a municipal corporation of the State of Georgia (“**City**”) on this _____ day of _____, 20____ [*insert date*]:

(a) Surety is licensed by the Insurance and Safety Fire Commissioner of the State of Georgia to transact surety business in the State of Georgia;

(b) Surety has reviewed the Agreement attached to the solicitation for Project Number: FC-8412, Annual Contract for Sanitary Sewer Repair Services (**“Project”**) and its corresponding **Appendix for Insurance Requirements;**

(c) Surety certifies that if, as of the date written above, _____(“**Offeror**”) was selected as the successful Offeror for the Project, Surety would provide bonding to Offeror for this Project in accordance with the corresponding **Appendix for Insurance Requirements**; and

(d) **Surety only**: The Surety states that Offeror's uncommitted bonding capacity (not taking into account this Project) is approximately $ _____ (U.S.). Surety's statement set forth in this Section (d) does not represent a limitation of the bonding capacity of Offeror or that Offeror will have the bonding capacity noted above at the time of contract execution for this Project.

PLEASE NOTE: If this Form 4.2 is executed by an Attorney-in-Fact, then Surety must attach a copy of a duly executed Power-of-Attorney evidencing such authority in addition to correctly completing this Form 4.2. If Offeror is unable to provide City with bonds that comply with the terms of the corresponding Appendix for Insurance Requirements within ten (10) days of receiving notice of intent to award the Project from the City, the City may, in its sole discretion, retain Offeror's security submitted with its offer and/or disqualify Offeror from further consideration for the award of the Agreement.

By executing this certification, Surety represents that all of the information provided by Surety herein is true and correct as of the date set forth above.

Surety: [*insert company name on line provided below*]

_____

By:_____

Print Name:_____

Title:_____

_____
Corporate Secretary/Assistant Secretary
(Seal)

Required Submittal (FORM 5)

Acknowledgment of Addenda

Proponents should sign below and return this form with their Proposal(s) to the Department of Procurement, 55 Trinity Avenue, City Hall South, Suite 1900, Atlanta, Georgia 30303, as acknowledgment of receipt of certain Addenda.

This is to acknowledge receipt of the following **Addenda** for **FC-8412, Annual Contract for Sanitary Sewer Repair Services:**

1. _____;
2. _____;
3. _____; and
4. _____.

Dated the _____day of _____, 20__.

Corporate Proponent: [Insert Corporate Name]	Non-Corporate Proponent: [Insert Proponent Name]
_____	_____
By:_____	By:_____
Print Name:_____	Print Name:_____
Title:_____	Title:_____
_____ Corporate Secretary/Assistant Secretary (Seal)	_____ Notary Public (Seal) My Commission Expires:_____

Required Submittal (FORM 6)

Proponent Contact Directory[1]

NAME	POSITION/TITLE	MAILING ADDRESS	OFFICE PHONE	CELL PHONE	EMAIL ADDRESS AND FAX NUMBER

[1] The purpose of the Proponent Contact Directory is to provide the City with a centralized, easily identified source of important contacts and other information regarding each of the business entities constituting a Proponent. This Proponent Contact Directory should include the names, positions/titles, firms, mailing addresses, phone and fax numbers and e-mail addresses for each of the following as it pertains to each of the firms in a Proponent's team:

1. At least two individuals, one primary the other(s) secondary, authorized to represent the firm for purposes of this RFP; and
2. Proponent Service Provider Key Personnel (as appropriate) listed in the Services Agreement included in this RFP at Part 2.

Required Submittal (FORM 7)

Reference List

Each Proponent must provide a list of at least three (3) references using the below-referenced format. The City is interested in reviewing references that are able to attest to a Proponent's performance ability and credibility in a particular industry or trade.

Reference: Name
Address
City, State, Zip
Phone
Fax

Project Title: _____

Contact Person: _____
Direct Telephone: _____
Email Address: _____

Date(s) of Project: _____

Description of Services:

Total Amount of Contract Including Change Orders:

Proponent's Role and Responsibilities:

Current Completion Status:

_____

(Use the Same Format to Provide the Additional References)

Required Submittal *"Unless a Proponent Elects to Submit an Alternative Form of Payment"* (FORM 8)

Proposal Bond (Page 1 of 2)

N/A

KNOW ALL MEN BY THESE PRESENTS, THAT WE_____

_____

hereinafter called the PRINCIPAL, and _____

_____

hereinafter called the SURETY, a corporation chartered and existing under the laws of the State of _____, and duly authorized to transact Surety business in the State of Georgia, are held and firmly bound unto the City of Atlanta, Georgia, in the penal sum of either: [i] _____ Dollars and Cents ($_____); or [ii] 5% of PRINCIPAL'S Proposal amount for **PROJECT NUMBER FC-8412, Annual Contract for Sanitary Sewer Repair Services**, good and lawful money of the United States of America, to be paid upon demand of the City of Atlanta, Georgia, to which payment well and truly to be made we bind ourselves, our heirs, executors, administrators and assigns, jointly and severally and firmly by these presents.

WHEREAS the PRINCIPAL has submitted to the City of Atlanta, Georgia, for **PROJECT NUMBER FC-8412, Annual Contract for Sanitary Sewer Repair Services**, a Proposal;

WHEREAS the PRINCIPAL desires to file this Bond in accordance with law, in lieu of a certified Proponent's check otherwise required to accompany this Proposal;

NOW THEREFORE: The conditions of this obligation are such that if the Proposal be accepted, the PRINCIPAL shall within ten (10) calendar days after receipt of written notification from the CITY of the award of the Contract execute a Contract in accordance with the Proposal and upon the terms, conditions and prices set forth therein, in the form and manner required by the City of Atlanta, Georgia, and execute sufficient and satisfactory Performance and Payment Bonds payable to the City of Atlanta, Georgia, each in the amount of one hundred percent (100%) of the total Contract price in form and with security satisfactory to said City of Atlanta, Georgia, then this obligation to be void; otherwise, to be and remain in full force and virtue in law; and the SURETY shall upon failure of the PRINCIPAL to comply with any or all of the foregoing requirements within the time specified above immediately pay to the City of Atlanta, Georgia, upon demand the amount hereof in good and lawful money of the United States of America, not as a penalty but as liquidated damages.

In the event suit is brought upon this Bond by the CITY and judgment is recovered, the SURETY shall pay all costs incurred by the CITY in such suit, including attorney's fees to be fixed by the Court.

Required Submittal *"Unless a Proponent Elects to Submit an Alternative Form of Payment"* (FORM 8)

Proposal Bond (Page 2 of 2)

N/A

Enclosed is a Proposal Bond in the approved form, in the amount of either:

[i] _____ Dollars and Cents ($_____), being in the amount of 5% of the CONTRACT Sum; or [ii] 5% of PRINCIPAL'S Proposal amount for **PROJECT NUMBER FC-8412, Annual Contract for Sanitary Sewer Repair Services**. The money payable on this bond shall be paid to the City of Atlanta, Georgia, for the failure of the Proponent to execute a CONTRACT within ten (10) days after receipt of the Contract form and at the same time furnish a Payment Bond and Performance Bond.

IN TESTIMONY THEREOF, the PRINCIPAL and SURETY have caused these presents to be duly signed and sealed this _____day of _____20__.

Corporate Proponent:
[Insert Corporate Name]

_____
By:_____
Name:_____
Title:_____

_____
Corporate Secretary/Assistant Secretary (Seal)

Non-Corporate Proponent:
[Insert Proponent Name]

_____
By:_____
Name:_____
Title:_____

_____
Notary Public (Seal)

My Commission Expires:_____

Surety:
Name:_____
By:_____
Name:_____
Title:_____

Required Submittal (FORM 9)

Required Submittal Checklist

The following submittals shall be completed and submitted with each Proposal see table below "Required Proposal Submittal Check Sheet." Please verify that these submittals are in the envelope before it is sealed. *Disclaimer:* **It is each Proponents sole responsibility to ensure that their proposal to the City is inclusive of all required submittal documents outlined on the below-referenced checklist; as well as within other parts of the solicitation document.**

Submit one (1) Original Proposal, signed and dated, and seven (7) complete copies of the Original Proposal including all required attachments.

In addition to the hard copy submissions, each Proponent shall submit two (2) digital versions of its Proposal Submission in Adobe Portable Document Format ("PDF") on compact disk (CDs). CD One (1) version should be a duplicate of the hard copy of the Proposal with no deviations in order or layout of the hard copy proposal. CD Two (2) version should be a redacted version of the hard copy Proposal Submission. Please refer to the Georgia Open Records Acts (O.C.G.A. § 50-18-72) for information not subject to public disclosure.

The City assumes no liability for differences in information contained in the Proponent's printed Proposal Submission and that contained on the CDs. In the event of a discrepancy, the City will rely upon the information contained in the Proponent's printed material (Hard Copy). Each CD should be labeled with the Project Number, Project Name, and the CD Number.

Item Number	**Required Proposal Submittal Check Sheet**	**Check (√)**
1	**Part I** – Instruction to Proponents (Proposal Guarantee Included)	( )
2	**Appendix A -** Office of Contract Compliance (Required Submittals Included)	( )
3	**Part I, Section 2** – All Required Submittal Forms (**if any of the required submittal documents are not submitted or incomplete within your Proposal submittal package, your firm may be deemed non-responsive**). Required Submittals include but are not limited to: • Form 1; Illegal Immigration Reform and Enforcement Act • Form 2; Contractor Disclosure Form • Form 3; Proponent Financial Disclosure • Form 4.1; Certification of Insurance • Form 4.2; Certification of Bonding Ability • Form 5; Acknowledgment of Addenda • Form 6; Proponent Contact Directory • Form 7; Reference List • Form 8; N/A • Form 9; Required Submittal Checklist	( )
4	**Proponent's Official Company Name:** **Company Physical Address:**	
5	**President/Vice President/Owner Name:** **Title:**_____ **Office Telephone Number:**_____ **Direct Cell Telephone Number:**_____ **Email Address:**_____	
6	**Primary Point-of-Contact Concerning RFP:**_____ **Title:**_____ **Office Telephone Number:**_____ **Direct Cell Telephone Number:**_____ **Email Address:**_____	

PART V

Draft Construction Services Agreement

ANNUAL CONSTRUCTION SERVICES AGREEMENT

THIS CONSTRUCTION SERVICES AGREEMENT ("Agreement") is entered into effective this _____ day of _____, 2015, (the "Effective Date") by and between THE CITY OF ATLANTA ("Owner" or the "City"), and _____ ("Contractor").

The City and Contractor agree as follows:

1. DEFINITIONS

The following terms have the meaning assigned:

"**Agreement Documents**" means this Agreement and its Exhibits, Appendices, Work Orders, Change Orders, Documentation, Drawings, and Specifications, including

Construction Services Agreement
Exhibit A- General Scope of Services
Exhibit A.1- Compensation and Fee Schedule
Exhibit A.2- Work Orders
Exhibit B- Legislation
Exhibit C- Supplemental Conditions and Technical Specifications
Exhibit D- Additional Contract Documents
Appendix A- Office of Contract Compliance
Appendix B- Insurance and Bonding Requirements

"**Agreement Term**" has the meaning set forth in Article 2, unless otherwise expressly amended or changed, pursuant to the City's authorized approval in conformance with the City of Atlanta Code of Ordinances and applicable law.

"**Changes**" has the meaning set forth in Article 8.

"**Change Order**" has the meaning set forth in Article 8.

"**City Representative**" has the meaning set forth in Article 6.

"**Claim**" means any demand, contention, or assertion seeking additional time or money under the terms of this Agreement. Claims by the Contractor must be made in writing and contain all of the following or such Claims are released: (a) a narrative statement describing the amount and bases of the Claim; (b) the precise number of days claimed as a result of any delay; and (c) a detailed calculation of the precise amount of additional compensation claimed with all required supporting Documentation.

"**Documentation**" has the meaning set forth in Article 4.

"**Drawings**" include, without limitation: all renderings, technical and design drawings, specifications, plans, layouts, diagrams, illustrations, descriptions, calculations, schedules, graphs, performance charts, shop drawings; as-built drawings; all graphic or pictorial material needed to show locations, dimensions, elevations, sections, and details; all documents necessary to fix and describe the size, quality and composition of the Project (or parts thereof); supplier operating and maintenance manuals, recommended spare parts lists, documents required to support permitting and licensing, and any other data pertinent to operation of the Project.

"Emergency Work" has the meaning set forth in Article 2.

DRAFT

"**Final Completion**" means that point in time where the City has confirmed to the Contractor in writing that the Services required by a Work Order have achieved Substantial Completion, Contractor has completed all punch-list items associated with a Work Order, and Contractor has provided all Documentation required by the Agreement Documents and Work Orders for Final Completion.

"**Final Payment**" means the final amount of compensation due under a Work Order or this Agreement (as applicable) and shall not become due until Contractor satisfies all of the requirements of Article 9.

"**Minimum Quantity**" means one dollar ($1.00) in United States Currency, which is the minimum amount of Services that shall be ordered by the City pursuant to this Agreement.

"**Project**" means or refers to the Project(s) specifically identified in Work Orders issued pursuant to this Agreement.

"**Services**" means the specific tasks and activities to be performed by Contractor as identified in a Work Order issued pursuant to this Agreement, as well as all ancillary and incidental tasks and activities not expressly identified in a Work Order but which are reasonably necessary to be performed in order to complete the tasks and activities expressly identified in a Work Order.

"**Standard**" has the meaning set forth in Article 6.

"**Substantial Completion**" as applicable to a Work Order, means that point in time in which the Services that are the subject of a Work Order are capable of being used for their intended purpose and comply with all of the requirements of Article 9, the Specifications, and the other Agreement Documents.

"**Total Sum**" means the total maximum amount of compensation for which all Work Orders may potentially be issued pursuant to this Agreement. Contractor's entitlement to payment under this Agreement shall not exceed the Total Sum.

"**Work**" means all the Services specified, indicated, shown, or contemplated by the Agreement Documents and applicable Work Orders, as well as the furnishing by Contractor of all materials, equipment, labor, methods, processes, construction, manufacturing, tools, plants, design, supplies, power, water, transportation and any other things necessary or incidental to complete such Services in accordance with the Agreement Documents and applicable Work Orders that will ensure a functional and complete Project(s).

"Work Order" means an order executed by the City, substantially in the form and substance provided in **Exhibit A** to this Agreement that specifies the Services to be provided by Contractor to the City, the agreed amount of payment for such Services, and the time limitations for completing the Services.

"**Work Order Commencement Date**" means the date identified in a notice to proceed and/or a Work Order issued by the City, which instructs the Contractor to start the performance of Services required by a Work Order. The times for Substantial Completion and Final Completion will be measured from the Work Order Commencement Date.

"**Work Product**" has the meaning set forth in Article 6.

2. SERVICES.

2.1 In General. The City desires to obtain from Contractor the Services described generally on **Exhibit A** attached and as further described on Work Orders (individually, a "Work Order" and,

DRAFT

collectively, the "Work Orders") that may be executed from time to time between the Parties, pursuant to this Agreement.

The Services to be provided by Contractor are those ordered by the City that are reflected in a Work Order executed by the City. The City agrees that it shall order the Minimum Quantity of Work from the Contractor pursuant to this Agreement. Contractor agrees to provide to City the Services per the Agreement Documents and each Work Order issued by the City. Each Work Order will include at least the following:

a reference to this Agreement;
the Work Order Commencement Date;
the required dates of Substantial and/or Final Completion of the Services, as applicable;
the Services to be provided by the Contractor;
required deliverables and submittals;
the amounts payable and payment schedule for the Services; and
any additional provisions applicable to the Services.

Except as provided for Emergency Work, no Work Order will become effective until it has been executed by an authorized representative of the City. A Work Order issued pursuant to this Agreement will be substantially in the form of **Exhibit A.2** hereto. All approved Work Orders shall be incorporated by reference into this Agreement.

2.1.1 Emergency Work. In some cases, the City may require emergency Services to be performed by the Contractor, which pose an imminent threat to the public health, safety, general welfare or the City's water or wastewater system ("Emergency Work"). In such cases, the City's Authorized Representative shall notify the Contractor by email or other written communication the type and scope of work needed under the circumstances. Once notified, Contractor shall immediately mobilize and begin Services, as is necessary to remediate the emergency conditions. Payment for such Services shall be in accordance with Option 1, pursuant to Section 4.1.1.

2.1.2 Authorization. If applicable, this Agreement is authorized by legislation adopted by the City, which is attached as **Exhibit B**.

2.2. The Total Sum of payments by City under this Agreement shall not exceed **$_____** during the first year in which this Agreement is effective. For each subsequent year that this Agreement is effective, City shall provide written notice to Contractor of the amount of funding allocated to this Agreement for such calendar year (each annual maximum amount, including the funding for the first year, shall be the "Annual Maximum Payment Amount"). In addition, each Work Order shall specify a maximum payment amount (the "Work Order Maximum Payment Amount") applicable to the Services to be performed under such Work Order.

2.3 Work Orders under this Agreement may be issued by City without further legislative approval under Code section 2-1111, if the legislation authorizing this Agreement provides for such issuance. In such circumstances, the Work Order may be executed by the City's Chief Procurement Officer, head of the affected using agency or other appropriate designee on behalf of City. City, at its sole discretion, may unilaterally issue Work Orders for Services for which charges are established in this Agreement. Contractor shall promptly proceed with the Services set forth in any such Work Order. If City solicits a proposal from Contractor for a Work Order, Contractor shall submit its proposal with a Work Order containing all the necessary terms and executed by Contractor. Work Orders may be issued or executed during the term of this Agreement that contain a service performance period that extends beyond the term; provided, however, that no Work Order may be issued or executed under this Agreement subsequent to the expiration or termination of the term.

DRAFT

2.4 City makes no representations or warranties about the quantity of services that will be requested or charges that will be paid under this Agreement. Any quantity of Services or amount of charges set forth in this Agreement are estimates only.

2.5 Initial Term. The initial term of this Agreement will be one 1 year. This Agreement shall commence on the Effective Date and end on [_____]. The initial term of the Agreement and any renewal term(s) are collectively referred to as the "Term".

2.6 Renewal Terms. City shall have the right in its sole discretion to renew this Agreement for two (2) additional one-year terms. If City desires to exercise an option to renew, it will submit legislation authorizing such renewal for consideration by City's Council and Mayor prior to the expiration of the prior term. The legislation will establish that the date of such renewal will be the day immediately following the expiration day of the prior term.

If such legislation is enacted, City will notify service provider of such renewal, at which time service provider shall be bound to provide Services during such renewal term, without the need for the parties to execute any further documents evidencing such renewal, it being acknowledged by service provider that its initial execution of this Agreement is deemed its agreement to continue to provide Services during any renewal term.

3. COMPENSATION

3.1 Compensation for Services will be based upon agreed unit prices as set forth in the fee schedule attached as **Exhibit A.1**. No payment to Contractor shall exceed Annual Maximum Payment Amount; Work Order Maximum Payment Amount; the Total Sum; or the hourly rates, materials, reimbursable expenses and other payment terms identified in Exhibit A.1. All costs of items associated with the Work and incidentals necessary for the proper and timely completion of the Work shall be considered as included in the unit prices attached as **Exhibit A.1**. Payment for all Work in accordance with the unit prices identified in **Exhibit A.1** shall be full compensation for all labor, materials, equipment, methods, processes, construction manufacturing, tools, plants, designs, supplies, power, water transportation and any other things necessary or incidental to furnish, install, construct, and test the Work covered under the applicable unit price. The unit prices set forth in Exhibit A.1 are inclusive of all taxes, levies, duties and assessments of every nature in connection with the Services ("Taxes"). Services for which there is no price schedule set forth in **Exhibit A.1** shall be considered incidental to the Work and no compensation shall be allowed.

3.2 Contractor acknowledges and agrees that if the quantities originally contemplated under the Agreement Documents are materially changed so that application of such unit prices to quantities of the Work performed will cause substantial inequity to the City, the applicable unit prices shall be equitably adjusted pursuant to Article 8. For purposes of this Article 3.2, a change in quantities may be considered material if such change is greater than or equal to forty percent (40%) more than the quantities set forth in the Agreement Documents.

3.3 No money shall be paid by the City upon any claim, debt, demand or account whatsoever, to any person, firm, or corporation who is in arrears to the City for taxes, or any other debt or claim, and the City shall be entitled to counterclaim and/or offset any such debt, claim, demand or account in the amount of taxes so in arrears or other debts or claims of the City, and no assignment or transfer of such debt, claim, demand, or account after the said taxes are due or after any such debt or claim is asserted by the City, shall affect the right of the City to so offset the said taxes, debts, or other obligations against the same. Contractor agrees that the City shall be allowed to setoff and recoup any claim or demand that it may have against Contractor (or any of its constituent members if Contractor is a joint venture) whether such claim or demand is liquidated or unliquidated. Contractor further agrees that in the event it assigns or sells any amounts due or to become due under this Agreement, notice to the City of such assignment or

DRAFT

sale shall not affect the City's rights of setoff or recoupment against Contractor for claims subsequently arising from this Agreement or any other contract with the City. Any assignee or purchaser of any amounts due Contractor under this Agreement shall be bound to these provisions and shall assume the risk of subsequently arising claims of setoff or recoupment.

4. TERMS OF PAYMENT

4.1 Payment to the Contractor will be made according to one of the following methods identified in this Article 4. Work Orders issued pursuant to this Agreement will identify the method of payment selected by the City. Selection of the applicable payment options identified in Articles 4.1.1 and 4.1.2 is in the City's sole discretion. In the event that a Work Order does not expressly state the procedure for payment selected by the City, then Contractor will be entitled to payment in accordance with Article 4.1.1. Contractor shall prepare and submit to City invoices for payment for all Services in accordance with the Work Order, which shall include such detail and format as the City may reasonably require.

Payment Methods

4.1.1 Option 1, Payment Upon Final Completion: Subject to the City's right to offset payment and its rights to withhold payment set forth in Article 4.4, Contractor shall be entitled to full payment for a Work Order sixty (60) days after achieving Final Completion of the Services required by a Work Order based upon a lump sum, based upon time and materials and calculated from the labor and materials categories set forth in **Exhibit A**. Contractor agrees to execute such payment application forms and release of claim forms as the City may require as a condition precedent to the City's obligation to make any payment to Contractor.

4.1.2 Option 2, Progress Payments: If the City elects to pay Contractor in accord with this Article 4.1.2, then upon issuance of a Work Order, Contractor shall submit to the City monthly invoices for Services performed. Each invoice shall be accompanied by a payment application identifying the applicable Work Order, such time sheets, daily reports, receipted invoices, invoices with check vouchers attached, Contractor's interim and final releases of lien and bond rights (as applicable), Contractor's sub-tier contractor interim and final releases of lien and bond rights (as applicable), Contractor's verification of quantities delivered pursuant to Work Order(s), all Drawings required by a Work Order, all documents, work product, and information required by the Specifications, and such other records as the City may reasonably request for the purpose of verifying the accuracy of the invoice (collectively "Documentation"). Subject to the City's right to offset payment and its rights to withhold payment set forth in Article 4.4, payment to Contractor will be made less applicable retention within thirty (30) days of receipt of all supporting Documentation required by the Agreement Documents. Contractor agrees to execute such payment application forms and release of claim forms as the City may require as a condition precedent to the City's obligation to make any payment.

4.2 This Article 4 completely supersedes the Georgia Prompt Pay Act as it relates to Owner payments and any modifications or successors to the Georgia Prompt Pay Act to the fullest extent allowed by law. Contractor acknowledges and agrees that payment shall be in accordance with the provisions of this Agreement and expressly waives its right to assert entitlement under O.C.G.A. § 13-1-11, *et. seq.* to the full extent permitted by law. Should the City fail to issue payment for undisputed amounts within ninety (90) days of approval, annual interest on the payment amount may accrue at the Prime Rate, plus one percent (1%). The Prime Rate shall be based on that published in the *Wall Street Journal* on the first business day of January or June, whichever has most recently passed, of the current year.

4.3 The City may decline to approve payment and may withhold any payment, in whole or in part because of: (a) defective work not remedied; (b) third party claims filed or reasonable evidence indicating probable filing of such claims; (c) failure of the contractor to promptly make payments to sub-tier contractors; (d) reasonable evidence that the Work cannot be completed for the Total Sum; (e) reasonable

DRAFT

evidence that the Services will not be completed within the time required by a Work Order; (f) failure to carry out the Services in accordance with the requirements of the Agreement documents; (g) failure to comply with the insurance and bonding requirements of the Agreement Documents; (h) Contractor's insolvency or reasonable evidence that contractor fails to pay its debts as they come due; (i) liquidated damages due in accordance with article 9; or (j) a material failure of the contractor to comply with any of the requirements of the agreement documents. No full or partial payment of any invoice or any use of Services constitutes acceptance of any Services.

4.4 Any Disputes concerning payment shall be resolved in accordance with Article16.

5. CONTRACTOR'S ACCOUNTING RECORDS AND THE CITY'S RIGHT OF AUDIT

Contractor shall keep full and detailed accounts and exercise such controls as may be necessary for proper financial management under this Agreement. The City shall be afforded reasonable access to Contractor's records, books, correspondence, instructions, drawings, receipts, subcontracts, purchase orders, memoranda, records of delivered quantities, daily reports, job cost reports, and such other data relating to this Agreement during normal business hours at the location where such documents are stored by Contractor. The Contractor shall preserve all such related documentation for a period of two (2) years after the expiration of the Agreement Term. The City shall have the right to audit the books and records related to this Agreement at any time. Contractor shall provide access to its books and records associated with this Agreement within seventy-two (72) hours of the City's provision of written notice to Contractor.

6. OBLIGATIONS OF THE CONTRACTOR

6.1 Contractor will perform all Services in a timely and professional manner, consistent with the Standard. Contractor shall not be deemed to be an agent of the City for any purpose but shall in all events be an independent contractor exercising control over its Services and the manner in which they are performed

6.2 Contractor will not perform any Services until the City directs Contractor in writing to proceed. Unless otherwise specified in a Work Order, the execution of a Work Order by the City shall constitute notice and authorization to Contractor to proceed in strict accordance with the Agreement Documents.

6.3 Contractor will perform Services under this Agreement with the highest degree of skill and diligence normally practiced by contractors performing the same or similar services as are being performed by Contractor under this Agreement and under any Work Order in accordance with all applicable federal, state, local laws, ordinances, rules, regulations, and lawful orders ("Standard"). Contractor shall be solely responsible for all construction means, methods, techniques, sequences, and procedures and shall coordinate all portions of the Work under the Agreement Documents.

6.4 Contractor shall enforce strict discipline, professionalism, and good order among Contractor's employees and sub-tier contractors. The City may, after provision of written notice to Contractor, require Contractor to remove from the Work any employee the City deems incompetent, unprofessional, or otherwise objectionable, including any employee of Contractor's sub-tier contractors.

6.5 Unless otherwise provided in the Agreement Documents, Contractor shall secure and will provide all permits, licenses, and other applicable legal documents required for Contractor's performance of the Work required by the Agreement Documents. In no event will Contractor's failure to timely secure permits, licenses, and/or other applicable legal documents serve as a basis for a Claim under this Agreement.

6.6 Key Personnel and Key Subcontractors. The following persons are identified by the Contractor as its key personnel that will provide the Work and Services required by the Agreement Documents:

DRAFT

6.6.1 Key Personnel:

a) _____; and

(b) _____

6.6.2 Key Subcontractors:

(a) _____; and

(b) _____

6.6.3 Contractor shall not transfer, reassign or replace Key Personnel and/or Key Subcontractors identified in Articles 6.6.1 and 6.6.2, except as the result of retirement, voluntary resignation, involuntary termination for cause in Contractor's sole discretion, illness, disability, or death, during the term of this Agreement without the prior written approval from the City.

6.7 Suspension of the Work. The City may, by written notice to Contractor, suspend at any time the performance of any or all of the Work to be performed under this Agreement. Contractor shall be entitled to request an extension of time pursuant to Article 8 in the event the City issues a suspension notice per this Article 6.7. Unless the suspension notice directs otherwise, upon receipt of a suspension notice Contractor must:

6.7.1 immediately discontinue suspended Work on the date and to the extent specified in the notice;

6.7.2 place no further orders or subcontracts for materials, services or facilities with respect to suspended Work, other than to the extent required in the notice; and

6.7.3 take any other reasonable steps to minimize costs associated with the suspension.

6.8 The City shall designate to the Contractor in writing a representative(s) (the "City Representative") who shall serve as primary interface and the single-point of communication for the provision of Services; have day-to-day interaction with Contractor to address issues relating to this Agreement; and to the extent provided under applicable laws and the City's Code of Ordinances, have the authority to execute any additional documents or Change Orders on behalf of City. Any Work, document, or item to be submitted or prepared by Contractor hereunder shall be subject to the review of the City Representative. The City Representative may disapprove, if in the City Representative's sole opinion the Service, Documentation, Drawing or item is not in accordance with the requirements of the Agreement Documents or sound professional principles, or is impractical, uneconomical or unsuited for the purposes for which the Service, document or item is intended. If any of the said items or any portion thereof are so disapproved, Contractor shall revise and/or correct the Work so that it meets the approval of the City Representative at no additional cost to the City. The "City Representative" may also be referred to as the "City Engineer."

6.9 Contractor shall diligently perform the Services required by a Work Order within the time required by the Work Order notwithstanding any disputes or disagreements with City. No Work shall be delayed or postponed pending resolution of any disputes or disagreements, except as City may otherwise direct pursuant to this Agreement. Contractor's failure or refusal to work through disputes in accordance

DRAFT

with this Article 6.9 shall be deemed a material default under this Agreement, which will entitle the City to immediately rely upon Contractor's sureties to cure said default.

6.10 Except as otherwise expressly provided in this Agreement, all Drawings, Documentation, reports, information, data, specifications, computer programs, technical reports, operating manuals and similar work or other documents, all deliverables, and other work product prepared or authored by Contractor or any of its sub-tier contractors exclusively for the City under this Agreement, and all intellectual property rights associated with the foregoing items (collectively, the "Work Product") shall be and remain the sole and exclusive property of the City. Any of Contractor's or its sub-tier contractors' works of authorship comprised within the Work Product (whether created alone or in concert with City or a third party) shall be deemed to be "works made for hire" and made in the course of Services rendered and, whether pursuant to the provisions of Section 101 of the U.S. Copyright Act or other applicable law, such Work Product shall belong exclusively to City. Contractor and its sub-tier contractors grant the City a non-exclusive, irrevocable, global, perpetual, transferable, fully paid up, royalty free license to all Work Product not exclusively developed for City under this Agreement.

6.10.1 If any of the Work Product is determined not to be a work made for hire, Contractor hereby assigns to the City, worldwide and in perpetuity, all rights, including proprietary rights, copyrights, and related rights, and all extensions and renewals of those rights, in the Work Product. If Contractor has any rights to the Work Product that cannot be assigned to City, Contractor unconditionally and irrevocably waives the enforcement of such rights and irrevocably grants to City during the term of such rights an exclusive, irrevocable, perpetual, transferable, global, fully paid and royalty-free license, with rights to sublicense through multiple levels of sub-licensees, to reproduce, make, have made, create derivate works of, distribute, publicly perform and publicly display by all means, now known or later developed, such rights.

6.10.2 The City shall have the sole and exclusive right to apply for, obtain, register, hold and renew, in its own name or for its own benefit, all patents, copyrights, applications and registrations, renewals and continuations and all other appropriate protection.

6.10.3 To the extent exclusive title or complete and exclusive ownership rights in any Work Product created by Contractor may not originally vest in City by operation of applicable law, Contractor shall immediately upon request, unconditionally and irrevocably assign, transfer and convey to the City all rights, title and interest in the Work Product.

6.10.4 Without any additional cost to the City, Contractor and its personnel shall promptly give City all reasonable assistance and execute all documents the City may reasonably request to enable the City to perfect, preserve, enforce, register and record its rights in all Work Product. Contractor irrevocably designates City as Contractor's agent and attorney-in-fact to execute, deliver and file, if necessary, any documents necessary to give effect to the provisions of this Article 6.10 and to take all actions necessary, in Contractor's name, with the same force and effect as if performed by Contractor.

6.11 Contractor shall take all reasonable precautions for the safety of, and shall provide all reasonable protection to prevent damage, injury, or loss to: (a) all employees on the Work and all other persons who may be affected thereby; (b) all the Work and materials to be incorporated therein, whether in storage or not, under the care, custody, or control of Contractor or any of Contractor's sub-tier contractors; (c) other property at the site where the Work is being performed or adjacent thereto, including trees, shrubs, lawns, walks, pavements, roadways, structures and utilities not designated for removal, relocation or replacement in the course of construction; and (d) the Work of the City or other separate contractors.

6.11.1 Contractor shall give all notices and comply with all applicable laws, ordinances, rules, regulations, and lawful orders of any public authority bearing on the safety of persons or property or their protection from damage, injury, or loss.

DRAFT

6.11.2 Contractor shall erect and maintain, as required by existing conditions and the progress of the Work, all reasonable safeguards for safety and protection, including posting danger signs and other warnings against hazards, promulgating safety regulations and notifying owners and users of adjacent utilities.

6.11.3 When the use or storage of explosives or other hazardous materials or equipment is necessary for the execution of the Work, Contractor shall exercise the utmost care and shall carry on such activities under the supervision of properly qualified personnel.

6.11.4 Contractor shall promptly remedy all damage or loss to any property caused in whole or in part by Contractor, any subcontractor, any sub-tier contractor or anyone directly or indirectly employed by any of them, or by anyone for whose acts any of them may be liable, except damage or loss attributable solely to the acts or omissions of the City and not attributable to the fault or negligence of Contractor. The foregoing obligations of Contractor are in addition to Contractor's obligations under Article 7 and **Exhibit A** or other provisions of the Agreement Documents.

6.11.5 Contractor shall not load or permit any part of the Work to be loaded so as to endanger its safety.

6.11.6 In any emergency affecting the safety of persons or property, Contractor shall act, at Contractor's discretion, to prevent threatened damage, injury or loss.

6.11.7 Contractor acknowledges that it is fully aware of appropriate and safe procedures regarding blasting, including the contents and requirements of Official Code of Georgia Annotated § 25-9-1 through § 25-9-12, Blasting or Excavating Near Underground Gas Pipes and Facilities, any amendments thereto and rules and regulations issued pursuant thereto, and Contractor shall fully comply therewith. Contractor agrees and acknowledges that any failure on its part to adhere to appropriate procedures and said laws, rules and regulations shall not only be a violation of law but shall also be a breach of Agreement.

6.11.8 Contractor acknowledges that it is fully aware of appropriate and safe procedures regarding high voltage lines, including the contents and requirements of Official Code of Georgia Annotated § 46-3-30 through § 46-3-39, Safeguards Against Contact with High Voltage Lines, any amendments thereto and rules and regulations issued pursuant thereto, and Contractor shall fully comply therewith. Contractor agrees that any failure on its part to adhere to appropriate procedures and said laws, rules and regulations shall not only be a violation of the law but shall also be a breach of Agreement.

6.11.9 Contractor acknowledges and agrees that it is the entity responsible under the law and that it is the entity employing or directing others to perform labor within the meaning of Official Code of Georgia Annotated § 34-1-1, Labor and Industrial Relations. It acknowledges and agrees likewise that it will comply with said law.

6.11.10 Contractor shall protect all Work, including but not limited to, excavations and trenches, from rain water, surface water, and backup of drains and sewers. Contractor shall furnish all labor, pumps, shoring, enclosures, and equipment necessary to protect and keep the Work free of water.

6.11.11 The provisions, terms and conditions of this Article 6 are in no way intended to limit the general requirements or the applicability of laws relating to Work conditions, safety or accident prevention and no specific provision or combination of specific provisions in any provision of Article 6 or in any other parts of the Agreement Documents shall be deemed to limit the obligations or responsibility of Contractor contained in general provisions with respect thereto or in laws, statutes, acts, rules or regulations which are applicable to Contractor but which are not specifically referred to in any part of the Agreement Documents.

DRAFT

7. INSURANCE AND BONDING

The Contractor shall procure and maintain, at its own cost, during the term of this Agreement the Insurance and Bonds Required by **Appendix B**.

8. CHANGES AND CLAIMS

8.1 Owner shall have the right at any time during the progress of the Work to increase or decrease the Services required by a Work Order or the time required for delivery of the Services (a "Change") pursuant to this Agreement. Any modification to a Work Order or this Agreement shall be set forth in a Change Form executed by the City and the Contractor, which documents the parties' mutual agreement as to the effect of the Change, the modification of the scope of the Work Order, and/or the amount of time required by a Work Order. It is expressly agreed that, except in an emergency endangering life or property, no additions or changes to the Work shall be made except upon written order of Owner, and Owner shall not be liable to Contractor for any extra labor, materials, or equipment furnished without such written order. No officer, employee, or agent of Owner is authorized to direct any extra or changed work by verbal order nor is Contractor authorized to proceed with any Work upon verbal order that results in a modification to the time or price of a Work Order.

8.2 The unit prices set forth in **Exhibit A.1** shall not be subject to modification pursuant to this Article. Except as provided by applicable law, in no event will a Change Order exceed the Total Sum authorized by the City pursuant to this Agreement.

8.3 Subject to the limitations set forth in Article 17, Contractor shall provide written notice to the City of any Claim within seven (7) calendar days of the occurrence of the event giving rise to the Claim, as well as (a) a narrative statement describing the amount and bases of the Claim; (b) the precise number of days claimed as a result of any delay or impact to the Work; and (c) a detailed calculation of the precise amount of additional compensation claimed with all required supporting Documentation. The failure of the Contractor to file any Claim within the time limits prescribed herein or in the form or manner as required hereby shall be deemed a material prejudice to the interests of the City and shall constitute a waiver and release of the Claim and the right to file or thereafter prosecute the same.

9. TIME

9.1 The Parties acknowledge that TIME IS OF THE ESSENCE for performance of the obligations required by this Agreement.

9.2 Contractor shall commence Work and proceed diligently with the Services, in accordance with the time specified by a Work Order. Contractor shall achieve Substantial Completion and Final Completion of the Services required by a Work Order within the times set forth in a Work Order.

9.2.1 When Contractor believes that the Services that are the subject of a Work Order are substantially complete, Contractor shall prepare a list of items and deliverables to be completed or corrected. The City may review the list of items and deliverables to be completed or corrected prepared by the Contractor and review the Services within a reasonable time after receipt of written notice from the Contractor and modify this list to include additional items. After Contractor has completed or corrected items necessary for achieving Substantial Completion it shall notify the City in writing. Thereafter, the City will review the Services and notify the Contractor in writing whether the Services have achieved Substantial Completion, as applicable.

9.2.2 If applicable, upon achieving Substantial Completion of the Services, as required by a Work Order, the Contractor will identify all punch-list items necessary for achieving Final Completion of the Work and provide this information to the City. After completion of all punch-list items and delivery

DRAFT

of all Documentation necessary for Final Completion of a Work Order, the Contractor shall forward written notice to the City that the Services are ready for final review and acceptance and shall also forward a final application for payment. When the City finds that the Services are acceptable and fully completed in accordance with the Agreement Documents, the City will issue a certificate for Final Payment that will approve the Final Payment due the Contractor under an applicable Work Order.

9.2.3 Neither Final Payment nor retention shall become due until the Contractor submits to the City the following: (a) an affidavit that all payrolls and other indebtedness connected with the Work have been paid or otherwise satisfied; (b) consent of Contractor's surety to Final Payment; and (c) any Drawings and Documentation required by a Work Order.

9.2.4 The acceptance of Final Payment by Contractor shall constitute a complete waiver and release of all claims against the City by Contractor.

9.3 In the event Contractor fails to achieve either Substantial Completion or Final Completion within the time required by a Work Order, then Contractor or its sureties shall pay to the City the following amounts upon demand:

Applicable Range of Estimated Work Order Amount	Substantial Completion Liquidated Damages	Final Completion Liquidated Damages
0 to $50,000	$100/day	$100/day
$50,000.01 - $100,000	$200/day	$200/day
$100,000.01 - $250,000	$300/day	$300/day
$250,000.01 - $500,000	$400/day	$400/day
$500,000.01 - $1,000,000	$500/day	$500/day
Over $1,000,000.01	$1,000/day	$1,000/day

9.3.3 The amounts set forth in Articles 9.3.1 and 9.3.2 shall be referred to herein as "Liquidated Damages." The amount of such charges is hereby agreed upon as a reasonable estimate of the probable loss of the City in the event Contractor fails to achieve the Substantial Completion and/or the Final Completion requirements of Work Orders. The Liquidated Damages are fixed per this Article 9 because of the difficulty of ascertaining the exact amount of losses the City will actually incur as a result of Contractor's delayed completion of a Work Order.

9.4 No payment(s) made, payment application(s) approved, partial use of the Services, or complete use of the Work by the City shall be deemed an acceptance of Services that do not conform to the requirements of the Agreement Documents.

10. FAILURE TO PERFORM AND TERMINATION FOR DEFAULT.

10.1 If Contractor (a) fails or refuses to proceed with or to perform its Work in accordance with the Agreement Documents, (b) fails or refuses to perform properly or abide by any terms, covenants, conditions or provisions contained in this Agreement or (c) fails or refuses to obey laws, ordinances,

DRAFT

regulations or other codes of conduct, Owner shall have the right to terminate Contractor's right to proceed under this Agreement. If Owner determines that Contractor has not remedied and cured the default or defaults in its performance within seven (7) calendar days following receipt by Contractor of written notice of said default or defaults or such shorter period as the circumstances may justify, in which case such shorter period shall be identified in Owner's written notice, then Owner may, at its option, without releasing or waiving its rights and remedies against the Contractor's sureties and without prejudice to any other right it may be entitled to hereunder or by law, terminate Contractor's right to proceed under a Work Order or this Agreement and take possession of the Work and all materials, tools, equipment and appliances of Contractor, take assignment of all of Contractor's subcontracts and purchase orders, and complete Contractor's Work by whatever means, methods or agency which Owner may, in its sole discretion, choose. In the event that Contractor's right to proceed has been terminated, Contractor agrees that it shall not be entitled to receive any further payment until after the Work has been completed. Moreover, all monies expended and all of the costs, losses, damages and extra expenses, including all management, administrative and other direct and indirect expenses (including attorneys' fees, arbitrator's fees, filing fees, expert fees, and all other costs and expenses associated with the default) incurred by Owner incident to such completion, shall be deducted from any amounts otherwise due or to become due the Contractor, and if such expenditures, together with said costs, losses, damages and extra expenses, exceed the unpaid balance of the Work Order Maximum Payment Amount, Contractor and its surety agree to pay promptly to Owner, on demand, the full amount of such excess, including costs of collection, attorneys' fees and interest thereon at the maximum legal rate of interest until paid.

10.2 Owner's determination of Contractor's default or defaults and Owner's decision as to Contractor's failure to remedy and cure said default or defaults upon notification of their existence, made by Owner under the belief that a default or defaults existed under the terms hereof and that Contractor failed to remedy and cure said default or defaults, shall be conclusive (a) as to Owner's right to proceed as herein provided, and (b) as to Contractor's surety's obligation to perform the obligations assumed under Contractor's performance and/or payment bond. The liability of Contractor hereunder shall extend to and include the full amount of any and all sums paid, expenses and losses incurred, damages sustained and obligations assumed by Owner under the belief that such payments or assumptions were necessary or required (a) in completion of the Work and in providing labor, materials, equipment, supplies and other items therefor or re-letting the Agreement and (b) in settlement, discharge or compromise of any claims, demands, suits and judgments pertaining to or arising out of the Work hereunder. A sworn itemized statement thereof or the checks or other evidence of payment shall be *prima facie* evidence of the fact and extent of Contractor's liability.

10.3 In the event Contractor is in default, Owner shall have the right to supplement Contractor's forces without terminating this Agreement for default and deduct the cost of the same from any amounts otherwise due Contractor.

10.4 In the event any termination for default is found to be wrongful or improper, Contractor agrees that its sole and exclusive remedy is to have the termination treated as a termination for convenience in accordance with Article 11, Termination for Convenience.

10.5 In addition to the bases for termination of this Agreement under Articles 10.1 and 10.2, the City may, at its option, terminate this Agreement for cause immediately by providing written notice to Contractor if Contractor engages in behavior that is dishonest, fraudulent, or constitutes a conflict of interest with Contractor's obligations under this Agreement or is in violation of any of the City's Ethics Ordinances. Contractor shall immediately notify the City in writing, specifically disclosing any and all potential or actual conflicts of interest, which arise or may arise during the Term of this Agreement. City shall make a written determination as to whether a conflict of interest actually exists and the actions to be taken to resolve the conflict of interest.

DRAFT

11. Termination For Convenience; Termination For Lack Of Appropriations.

11.1 Termination For Convenience. The City shall have the right to terminate this agreement or a Work Order without cause upon seven (7) calendar days' written notice to Contractor. In the event of such termination for convenience, Contractor's recovery against Owner shall be limited to Services performed through the date of termination, calculated on a percent complete basis, together with any retainage withheld, if applicable, plus reasonable close-out and termination costs approved by the Owner, less the amount of prior payments to the Contractor, and Contractor shall not be entitled to any other and further recovery against Owner, including, but not limited to, anticipated profit on work not performed. In no event shall Contractor be entitled to a "cost-plus" recovery from Owner.

11.2 TERMINATION For Lack Of Appropriations. If, during any year of this Agreement, legislation establishing a Total Sum for the following year is not enacted, this Agreement will terminate in its entirety on the last day of the Agreement term for which a total sum has been legislatively authorized; provided, however, that Work Orders funded out of a previously legislatively authorized total sum amount may continue beyond such termination date. Furthermore, at any time during the term of this Agreement, City shall be entitled to terminate the Agreement for lack of appropriations or sufficient funding under the agreement upon providing thirty (30) days written notice to Contractor that the sufficient funding is not present to perform the Services under this Agreement. If the City terminates the Agreement pursuant to this provision, Contractor's recovery against Owner shall be in accordance with Section 11.1, above.

12. FORCE MAJEURE

Any delay in performance caused by terrorist attacks, insurrections, storms, fires, hurricanes, tornadoes, earth quakes, or other acts of God ("Force Majeure Event") shall excuse the performance of both parties for the duration the Force Majeure Event is in effect. If the Contractor is delayed at any time in the progress of the Work by a Force Majeure Event, then Contractor will be entitled to seek a Change Order in accordance with the requirements of Article 8. Any extension of Contract Time on account of a Force Majeure Event shall be net of any delays caused by or due to the fault or negligence of Contractor. The Contractor shall cooperate in good faith with the City to minimize the impact of any such occurrence. No extension of time shall be granted unless the Force Majeure Event causes a delay to a Substantial Completion Date, and such delay is proven by an independent critical path analysis of the effected work activities. Contractor shall not be entitled to any compensation for a Force Majeure Event delay. Contractor's sole remedy for Force Majeure Event delay shall be a time extension.

13. WARRANTY

Contractor warrants to the City that all materials and equipment furnished under this Agreement will be new and of workmanlike quality unless otherwise specified, and that all Work will be of good quality, free from faults and defects and in conformance with the Agreement Documents. All Work not conforming to these requirements, including substitutions not properly approved and authorized, may be considered defective. If required by City, Contractor shall furnish satisfactory evidence as to the kind and quality of materials and equipment. This warranty is not limited by any other provision of the Agreement Documents. The Warranties set forth in this Article and elsewhere in the Agreement Documents shall survive Final Completion of any Work done and the Agreement Term. All warranties are in addition to the rights, remedies, and redress that the City has at law or in equity, and none of Contractor's warranties shall be deemed a sole or exclusive remedy to the City.

13.2 If within one (1) year from the expiration of the Agreement Term or Final Completion of a Work Order (whichever timeframe is longer), or within such longer period of time as may be prescribed by law or by the term of any applicable special warranty required by the Agreement Documents ("Warranty

DRAFT

Period"), any of the Work is found to be defective or not in accordance with the Agreement Documents, Contractor shall correct it promptly after receipt of a written notice from the City to do so. This obligation shall survive both Final Payment for the Work or designated portion thereof and termination of the Agreement. Contractor acknowledges that the Warranty Period provides a period during which Contractor has a duty to repair and does not in any way limit Contractor's liability for Work that is not in accordance with the Agreement Documents, including any that may be discovered more than one (1) year after the date of Final Completion of a Work Order or expiration of the Agreement Term.

13.3 Without limiting the responsibility or liability of Contractor under the Agreement, all warranties given by manufacturers on materials or equipment incorporated in the Work are hereby assigned by Contractor to the City at no additional cost to the City. If requested, Contractor shall execute enforceable formal assignments of said manufacturer's warranties to the City at no additional cost to the City. Contractor shall not obtain any materials or equipment under warranties, which do not run directly to the benefit of the City, and all such warranties shall be directly enforceable by the City.

13.4 The foregoing warranties, and those contained elsewhere in the Agreement Documents or implied by law, shall be deemed cumulative and not alternative or exclusive. No one or more of them shall be deemed to alter or limit any other.

14. CORRECTION OF THE WORK

The Contractor shall promptly correct Work rejected by the City or Work failing to conform to the requirements of the Agreement Documents, whether discovered before or after Substantial Completion of a Work Order and whether or not fabricated, installed or completed. Costs of correcting such rejected Work, including additional testing and inspections, the cost of uncovering and replacement, and compensation for the Owner's, Owner's consultants, or a design professionals' services and expenses made necessary thereby, shall be at the Contractor's expense. If the Contractor fails to correct defective or non-conforming Work within seventy-two (72) hours from receipt of the City's written notice, then the City shall have the right to correct the defective or non-conforming work at Contractor's expense.

15. INDEMNIFICATION

15.1 To the fullest extent permitted by law, the Contractor shall indemnify, defend, and hold harmless the Owner and from and against any and all claims, damages, losses, demands, judgments and costs of suit or defense, including attorneys' fees, and reimburse Owner for any expense, damage or liability incurred by Owner whether for personal injury, property damage, direct or consequential damage, or economic loss arising or alleged to have arisen from the acts or omissions of Contractor, a subcontractor, anyone directly or indirectly employed by them or anyone for whose acts they may be liable, regardless of whether or not such claim, damage, loss or expense is caused in part by a party indemnified hereunder. Such obligation shall not be construed to negate, abridge, or reduce other rights or obligations of indemnity that would otherwise exist as to any party or person. This indemnity obligation shall include, but not be limited to, claims made or lawsuits filed by employees of Contractor or employees of anyone for whose acts Contractor may be liable, and claims made or lawsuits filed by employees of Owner. The foregoing indemnification does not apply to claims arising out of the sole negligence of Owner. Contractor further agrees to reimburse Owner for all costs and expenses, including attorneys' fees, expert witness fees, and/or consultant fees incurred to enforce these indemnity obligations.

15.2 Contractor will save and keep all Projects related to this Agreement free from all mechanics' liens and all other liens by reason of its Work or of any materials or other things used by it therein. If Contractor fails to remove any lien by bonding it, or otherwise, Owner, among other remedies, may retain sufficient funds out of any money due or thereafter to become due by Owner to Contractor to pay the same and all costs incurred by reason thereof, and may pay said lien or liens and Owner's costs associated with the lien or liens including reasonable attorneys' fees out of any funds at any time in the hands of

DRAFT

Owner owing to Contractor. Contractor agrees that it shall be obliged to bond off any claim of lien of any of its subcontractors or suppliers notwithstanding any claim or argument as to non-payment or an alleged prior breach by Owner as an alleged result of non-payment. Contractor's obligation to bond off all liens of its subcontractors and suppliers is absolute and unconditional, and Contractor's failure to bond off any lien shall be deemed a material breach and default of this Agreement. Contractor's performance and/or payment bond sureties shall be obliged to bond all liens filed by subcontractors and suppliers of Contractor in the event that Contractor fails for any reason whatsoever to bond any such lien filed after ten (10) days written notice from Owner to Contractor demanding the bonding of such lien(s). Contractor understands and agrees that it shall ensure that its own subcontractors and suppliers have the same obligations as Contractor under this Article.

15.3 Contractor shall indemnify and hold City, harmless from and against any losses, liabilities, damages, demands and claims, and all related costs (including reasonable attorneys' fees and costs of investigation, litigation, settlement, judgment, interest and penalties) arising from claims or actions based upon any of the Work, Services, materials or methodologies used by Contractor (or any Contractor agent, subcontractor, sub-tier contractor or representative), or the City's use thereof (or access or other rights thereto) in connection with the Work, infringes or misappropriates the intellectual property rights of a third party. If any Work, Services, materials, or methodologies provided by Contractor hereunder is held to constitute, or in the City's reasonable judgment is likely to constitute, an infringement or misappropriation, the City may direct that Contractor: (i) procure the right for the City to continue using such Work, Services, or methodologies; (ii) replace such Work, Services, materials or methodologies with a non-infringing equivalent, provided that such replacement does not result in a degradation of the functionality, performance or quality of the Work; (iii) modify such Work, Services, materials or methodologies, or have such Work, Services, materials or methodologies modified, to make them non-infringing, provided that such modification does not result in a degradation of the functionality, performance or quality of the Work, Services, materials or methodologies; or (iv) create a feasible workaround that would not have any adverse impact on City.

16. DISPUTE RESOLUTION

16.1 At the City's sole election, any Claim arising out of or related to the Agreement shall be subject either to binding arbitration or litigation at the City's option. Prior to arbitration or litigation, the parties shall endeavor to resolve Claims or disputes in accordance with the terms of this Agreement.

16.2 If Claims are not resolved by negotiation, mediation, or otherwise, and the Owner elects arbitration, the arbitration shall be held in Atlanta, Georgia and shall be in accordance with the Construction Industry Arbitration Rules of the American Arbitration Association currently then in effect or such other similar rules and organization as the Owner may elect. The demand for arbitration shall be in writing and filed with the appropriate organization selected by the Owner and shall be served on the Contractor. The agreement to arbitrate shall be specifically enforceable under applicable law in any court having jurisdiction thereof. In any arbitration or litigation, the arbitrators or the Court shall have the jurisdiction to award the City costs, arbitrator fees, expert fees, and attorneys' fees, and the arbitrators or the Court shall award all such fees to the City if it is the prevailing party.

16.3 Except at Owner's sole discretion and with its consent, no arbitration arising out of or relating to the Agreement shall include, by consolidation or joinder or in any other manner, any other person or entity, including but not limited to any of Contractor's subcontractors and suppliers, and any other separate contractors or suppliers. The Owner's consent or election to allow consolidation or joinder shall not constitute consent to arbitration of any Claim not subject to arbitration pursuant to this Contract.

16.4 Any award rendered by an arbitrator or arbitrators shall be final, and judgment may be entered upon it in accordance with applicable law in any court having jurisdiction thereof.

DRAFT

16.5 If the Owner does not elect arbitration, any Claims shall be resolved in Fulton County, Georgia Superior Court. Contractor hereby submits to jurisdiction and venue in Fulton County, Georgia, and waives all defenses based on a lack of jurisdiction and/or venue. Contractor acknowledges that this Agreement was negotiated, at least in part, in Fulton County, Georgia. In any arbitration or litigation, the arbitrators or the Court shall have the jurisdiction to award the City costs, arbitrator fees, expert fees, and attorneys' fees, and the arbitrators or the Court shall award all such fees to the City if it is the prevailing party.

17. EXTENSIONS OF TIME AND DELAY

Contractor shall not be entitled to payment or compensation of any kind from the City for indirect, impact, or delay damages, including but not limited to costs of delay, disruption, interference, ripple effect, unforeseen site conditions, loss of anticipated profits, impact or hindrance from any cause whatsoever (collectively "Delay Damages"), whether such delay, disruption, interference, ripple effect, unforeseen site conditions, impact or hindrance be reasonable or unreasonable, foreseeable or unforeseeable, or avoidable or unavoidable. Contractor expressly waives and releases any Claim for Delay Damages and agrees that Contractor's sole and exclusive remedy for any delay shall be an extension of time to perform the Work and Services required the Agreement Documents, which shall be administered in accordance with the requirements of Article 8.

18. MISCELLANEOUS

18.1 The law of the state of Georgia will govern the validity of this Agreement, its interpretation and performance, and any other claims related to it.

18.2 If any of the provisions contained in the Agreement Documents are held for any reason to be invalid, illegal, or unenforceable in any respect, such invalidity, illegality, or unenforceability will not affect any other provision, and the Agreement Documents will be construed as if such invalid, illegal, or unenforceable provision had never been contained herein.

18.3 Contractor shall not sell, transferor, or assign any or all of its respective rights and obligations under this Agreement to a third party without the City's written consent. Any attempted sale, transfer, or assignment of the rights or obligations of this Agreement shall be void and of no effect.

18.4 Articles 1, 4, 5, 7, 8, 9, 10, 11, 15, 16, 17, 18, 19, and 20 shall survive termination of this Agreement.

18.5 The Drawings or other Instruments of Service prepared by Contractor or its sub-tier contractors shall be owned by the City and may be used by the City on projects other than the Project(s) performed in connection with a Work Order issued per this Agreement.

18.6 Except as otherwise provided herein, all notices and other communications required or permitted to be given under this Agreement, including its Exhibits and Work Orders, shall be in writing, addressed to the parties at their respective addresses as provided below, and may be delivered in person, sent by overnight express mail or courier service, or by facsimile, or by certified mail postage prepaid, return receipt requested. The addresses of each party are as follows:

City of Atlanta: Department of Watershed Management	**Contractor:**
72 Marietta Street	_____
3rd Floor	_____
Atlanta GA, 30303	_____
	_____

DRAFT

Each party may from time to time change its address for receipt of notices by sending notice thereof in the manner provided herein to the other Party.

18.7 The failure of the City to insist upon or enforce strict performance of any provision of this Agreement or to exercise any right under the Agreement Documents shall not be construed as a waiver or relinquishment of the City's right to assert or rely upon any such provision or right and/or any other requirement of the Agreement Documents.

18.8 The Agreement Documents constitute the entire agreement and supersede all prior written or oral understandings, and may only be changed by a written amendment to the Agreement executed by both the City and the Contractor.

18.9 Contractor acknowledges and agrees that it may be adequately compensated in money damages for any Claims arising from performance of the Agreement Documents. Accordingly, Contractor waives and releases any right to assert a claim for *quantum meruit*, unjust enrichment, and any other equitable or quasi-contractual claim for relief that may be available under applicable law.

18.10 During the performance of this Agreement, Contractor agrees to comply with all provisions of Part 2, Chapter 2, Article X, Division 11, including Section 2-1441 through 2-1460 of the Code of Ordinances of the City of Atlanta, the Equal Business Opportunity ("EBO") Program as may be hereafter amended.

18.11 No presumption of any applicable law relating to the interpretation of contracts against the drafter shall apply to this Agreement.

18.12 Contractor is an independent contractor of the City and nothing in this Agreement shall be deemed to constitute Contractor and the City as partners, joint venturers, or be construed as requiring or permitting the sharing of profits or losses. Except as expressly provided in Article 6.10, nothing in this Agreement shall be deemed to constitute Contractor and the City as principal and agent and neither party has the authority to represent or bind or create any legal obligations for or on behalf of the other party.

18.13 Contractor acknowledges that this Agreement and any changes to it by amendment, modification, Change Order or other similar document may have required or may require the legislative authorization of the City's Council and approval of the Mayor. Under Georgia law, Contractor is deemed to possess knowledge concerning the City's ability to assume contractual obligations and the consequences of Contractor's provision of goods or Services to the City under an unauthorized contract, amendment, modification, Change Order or other similar document, including the possibility that the Contractor may be precluded from recovering payment for such unauthorized goods or Services. Accordingly, Contractor agrees that if it provides goods or Services to the City under a contract that has not received proper legislative authorization or if Contractor provides goods or Services to the City in excess of the any contractually authorized goods or Services, as required by the City's Charter and Code, the City may withhold payment for any unauthorized goods or Services provided by Contractor. Contractor assumes all risk of non-payment for the provision of any unauthorized goods or Services to the City, and it waives and releases all claims to payment or to other remedies for the provision of any unauthorized goods or Services to the City, however characterized, including, without limitation, all remedies at law or equity.

19. CONFIDENTIAL INFORMATION

Contractor agrees to preserve as strictly confidential all Confidential Information for two (2) years following the expiration or termination of this Agreement; provided, however, that Contractor's obligation for Confidential Information that constitutes trade secrets pursuant to applicable law will

DRAFT

continue for so long as such Confidential Information continues to constitute a trade secret under applicable law. Any Confidential Information that may be deemed Sensitive Security Information by the Department of Homeland Security or any other similar Confidential Information related to security will be considered trade secrets. Upon request by City, Contractor will return any trade secrets to City. Contractor agrees to hold the Confidential Information of the City in trust and confidence and will not disclose it to any person, or use it (directly or indirectly) for its own benefit or the benefit of any other person other than in the performance of its obligations under this Agreement. Contractor will be entitled to disclose any Confidential Information if compelled to do so pursuant to: (i) a subpoena; (ii) judicial or administrative order; or (iii) any other requirement imposed upon it by applicable law. Prior to making such a disclosure, to the extent allowed pursuant to applicable law, the Contractor shall provide the City with thirty six (36) hours prior notice by facsimile of its intent to disclose, describing the content of the information to be disclosed and providing a copy of the pleading, instrument, document, communication or other written item compelling disclosure or, if not in writing, a detailed description of the nature of the communication compelling disclosure with the name, address, phone number and facsimile number of the person requesting disclosure.

20. ETHICS IN CONTRACTS

20.1 Gratuities and Kickbacks. In accordance with the City of Atlanta's Code of Ordinances, Section 2-1484, as may be amended, it shall be unethical for any person to offer, give or agree to give any employee or former employee or for any employee or former employee to solicit, demand, accept or agree to accept from another person a gratuity or an offer of employment in connection with any decision, approval, disapproval, recommendation, preparation or any part of a program requirement or a purchase request, influencing the content of any specification or procurement standard, rendering of advice, investigation, auditing or in any other advisory capacity in any proceeding or application, request for ruling, determination, claim or controversy or other particular matter pertaining to any program requirement or a contract or subcontract or to any solicitation or proposal therefor. Additionally, it shall be unethical for any payment, gratuity or offer of employment to be made by or on behalf of a subcontractor under a contract to the prime contractor or higher tier subcontractor or any person associated therewith as an inducement for the award of a subcontract or order.

20.2 Fraud and misrepresentations. Any written or oral information provided by Contractor directly or indirectly related to the performance of the Work required by this Agreement constitutes material representations upon which the City relies for the requirements of the Agreement and compliance with local, state and federal rules and regulations. Contractor agrees to immediately notify the City of any information provided to the City that it knows and/or believes to be false and/or erroneous and immediately provide correct information to the City and take corrective action. Contactor further agrees to immediately notify the City of any actions or information that it believes would constitute fraud or intentional misrepresentations to the City in the performance of this Agreement, whether or not such information actually constitutes fraud and/or intentional misrepresentations, by contacting the Integrity Line 1-800-884-0911. Contractor agrees to place signage provided by the City regarding the Integrity Line at the location to which Contractor's employees report to perform the Work required by this Agreement. Contractor acknowledges and agrees that a finding of fraud or other impropriety on the part of the Contractor or any of its subcontractors may result in suspension or debarment; and the City may pursue any other actions or remedies that the City may deem appropriate. Contractor agrees to include this clause in its subcontracts and take appropriate measures to ensure compliance with this provision.

[Signatures on the following pages.]

DRAFT

The parties hereto by authorized representatives have executed this Agreement as of the Effective Date.

The City of Atlanta **[Contractor]**

_____

Mayor

Attest:

_____

Municipal Clerk (Seal)

Recommended:

_____

Chief Procurement Officer:

_____

Commissioner; Department of Watershed Management

Approved as to form:

_____

City Attorney

DRAFT

Signature Block Options for Contractor:

Corporate signature:

[Insert Corporate Name]

By: _____

Name: _____

Title: _____

Corporate Secretary/Assistant

Secretary (Seal)

Limited Liability Company:

[Insert LLC Name]

By: _____

Name: _____

Title: _____

Notary Public (Seal)

My Commission Expires:

DRAFT

EXHIBIT A

SCOPE OF SERVICES

EXHIBIT A

ANNUAL CONSTRUCTION SERVICES AGREEMENT

GENERAL SCOPE OF SERVICES

This Contract comprises the emergency repair of sanitary and storm sewers in various portions of the City of Atlanta's separate and combined sewer collection system, as designated by the Engineer throughout the course of the work. The objective is to remedy detrimental defects to sewers and sewer overflow conditions to renovate the structural integrity of the sewer, while maximizing sewer and manhole accommodation efficiency and effectiveness.

Work will consist of completing necessary repairs to linear sewer and storm infrastructure utilizing a menu of repair methods such as: Open-cut/Replacement, Cured-in-Place Lining (CIPP), Pipe-bursting, Point Repairs (internal and external), Slip lining, Jack-and-Bore, manhole rehabilitation, lateral replacement, rehabilitation, and any other methods deemed necessary. Various pipe materials and appurtenances will be utilized as required per respective technical specifications.

Work will be comprised of necessary cleaning, which involves removal of silt, which is defined as any and all solid or semi-solid materials, including fine and granular material, such as sand, grit, gravel, and rock as well as debris, grease, oil, sludge, slime, or any other loose material or encrustation lodged in the manhole or sewer. It also involves removal of invading roots, corroded concrete, corroded manhole rungs, corroded ladders, intruding laterals and any other extraneous debris.

Meanwhile, the work will consist of the assessment of sewers, including the survey of sewer assets, while utilizing CCTV, sonar or a combination of sonar and CCTV technologies to document the internal structural and service condition of sewers for planned future maintenance.

The qualified applicant, or team of applicants, will be selected based on their effectiveness and efficiency in providing the following services to be provided under this contract. The services shall include but are not limited to the following scope of work items:

1. Mobilization and demobilization of sufficient cleaning units and associated equipment necessary to complete the scope of work within the contract period.

2. Cleaning and inspection to be conducted on sewers ranging from 8 inches to 60 inches in diameter or larger. Selection of cleaning equipment and method based on the condition of sewer segments at the time work begins shall be indicated by the Contractor.

3. Sewer cleaning equipment shall be capable of removing sand, grit, gravel, grease other materials or obstructions from sewer pipes and manholes. The intent of the cleaning is to remove foreign materials and restore the sewer to a minimum of 95 percent of the original carrying capacity.

4. Removing soil, sand, rocks, bricks, grease, and other solid or semi-solid material resulting from cleaning operations at the downstream access point to the pipe. Removal of solids and semi-solids resulting from cleaning operations shall be disposed lawfully at the end of each work day at a licensed landfill.

5. Acceptance of sewer cleaning work is subject to DWM COA review. The Contractor shall verify that the cleaning has restored the capacity of each segment to 95 percent by means of inspection acceptable to DWM COA.

6. Closed circuit television (CCTV) and/or sonar TISCIT inspection to utilized to discern internal pipe surface conditions and pipeline defects.

7. Clearing, disposal, and grading for access route when deemed necessary to facilitate completion of work and to approved by the Engineer and pursuant to requirements detailed in Section 02112 Route Clearing.

8. Right-of-way clearing of existing access routes to maintain access to sewer assets for maintenances.

9. Manhole frame replacement and height adjustment to be approved by the City.

10. Manhole rehabilitation.

11. Bypass pumping.

12. Open-cut/Replacement.

13. Pipe-burst.

14. Cured-in-place pipe.

15. Jack-and-Bore.

16. Perform point repairs (Internal or External) when deemed necessary to facilitate completion of work and to be approved by the Engineer and pursuant to requirements detailed in Section 02757 Point Repairs of Sanitary Sewers.

17. Perform service lateral replacement/rehabilitation and reconnects when deemed necessary and to be approved by the Engineer and pursuant to requirements detailed in Section 02730 Sewers and Accessories.

18. Implementation of necessary Erosion Control measures pursuant to local, state, and federal requirements

19. Implementation of necessary Traffic Control measure pursuant to local, state, and federal requirements.

20. Removal and replacement of pavement, hardscape, & landscaping features.

21. Debris/Deposits removal and disposal pursuant to local, state, and federal requirements and provide disposal tickets/manifests.

22. Provide, operate, maintain and subsequently remove on completion, adequate ventilation apparatus in the form of blowers and/or fans

23. Perform all work in accordance with OSHA confined space entry regulations and the project specific Site Safety Plan.

24. Coordinate their work with all local fire, police and emergency response authorities.

25. Provide Daily Reports on work completed.

EXHIBIT A.1

COST PROPOSAL

EXHIBIT A.1

COMPENSATION TERMS AND FEE SCHEDULE

Payment for all Work will be in accordance with the unit prices stated in the Cost Proposal Form. The payment method for this contract will be in accordance with Article 4.1.2, Option 2, which states the following:

4.1.2 Option 2, Progress Payments: If the City elects to pay Contractor in accord with this Article 4.1.2, then upon issuance of a Work Order, Contractor shall submit to the City monthly invoices for Services performed. Each invoice shall be accompanied by a payment application identifying the applicable Work Order, such time sheets, daily reports, receipted invoices, invoices with check vouchers attached, Contractor's interim and final releases of lien and bond rights (as applicable), Contractor's sub-tier contractor interim and final releases of lien and bond rights (as applicable), Contractor's verification of quantities delivered pursuant to Work Order(s), all Drawings required by a Work Order, all documents, work product, and information required by the Specifications, and such other records as the City may reasonably request for the purpose of verifying the accuracy of the invoice (collectively "Documentation"). Subject to the City's right to offset payment and its rights to withhold payment set forth in Article 4.4, payment to Contractor will be made less applicable retention within thirty (30) days of receipt of all supporting Documentation required by the Agreement Documents. Contractor agrees to execute such payment application forms and release of claim forms as the City may require as a condition precedent to the City's obligation to make any payment.

CITY OF ATLANTA

DEPARTMENT OF WATERSHED MANAGEMENT

OFFICE OF LINEAR INFRASTRUCTURE OPERATIONS
FC-8412, ANNUAL CONTRACT FOR SANITARY SEWER REPAIR SERVICES
COST PROPOSAL FORM

ALL ITEMS LISTED BELOW SHALL INCLUDE FURNISHING ALL PRODUCTS, MATERIALS & EQUIPMENT AND PERFORMING ALL LABOR NECESSARY TO COMPLETE AND PUT INTO OPERATION THE SANITARY SEWER REPAIR ANNUAL CONTRACT WITH THE CITY OF ATLANTA DRAWINGS, SPECIFICATIONS, AND STANDARDS. A UNIT PRICE MUST BE PROVIDED FOR EACH BID ITEM UNLESS OTHERWISE NOTED. **FAILURE TO PROVIDE A COMPLETE BID FORM AND BID DATA MAY DEEM THE BID NON-RESPONSIVE.**

SEE SECTION 01200, Measurement and Payment, FOR DETAILED DESCRIPTION OF BID ITEMS.

Item No.	Apprx. Quan.	Unit	Description	Unit Price	Total Price Figures
1			**GENERAL CONDITIONS**		
A			***Mobilization***		
1-A-1000	1	LS	Mobilization/Project Management/ Demobilization		
D			***Traffic Control (for Work in Commercial Streets)***		
1-D-1405	1	LS	Work Zone Staging and Traffic Control; All Streets		
1-D-1415	20	EA	Warning Signs (per Day)		
F			***Administrative Requirements***		
1-F-1305	20	EA	Qualified Safety Officer		
L			***Public Relations***		
1-L-1700	20	EA	Public Information Representative		

Item No.	Apprx. Quan.	Unit	Description	Unit Price	Total Price Figures
2			**SITEWORK - GENERAL**		
H			***Earthwork***		
2-H-2910	1000	LF	Clearing, Disposal & Grading for Access Route		
2-H-3020	200	CY	Unsuitable Soil Haul Off & Replace		
2-H-3025	200	CY	Additional Pipe Bedding Material		
2-H-3900	200	TON	Surface Stone, In-Place for Access Route		
2-H-3910	100	LF	Surface Stone and Filter Fabric, Removal from Access Route		
2-H-7410	100	CY	Rock Excavation (additional over conventional excavation)		
M			***Fences & Gates***		
2-M-3010	500	LF	Tree Protection Fence		
S			***Erosion Control Items***		
2-S-1225	500	LF	Sediment Barrier (Silt Fence - Type C)		
2-S-1240	20	EA	Inlet Sediment Trap (Sd2)		
X			***Concrete Products***		
2-X-1410	75	CY	Flowable Fill		
2-X-5410	10	EA	Pavement Patch – Manhole Adjustment/Raising		
4			**SEWER COLLECTIONS**		

Item No.	Apprx. Quan.	Unit	Description	Unit Price	Total Price Figures
A			***Pipe – Gravity Pipe***		
4-A-2108	500	LF	Sewer Collections, PVC, Gravity Pipe (Replace), 8" Diameter, 0'-8' Cut		
4-A-2208	300	LF	Sewer Collections, PVC, Gravity Pipe (Replace), 8" Diameter, 8'-12' Cut		
4-A-2308	300	LF	Sewer Collections, PVC, Gravity Pipe (Replace), 8" Diameter, 12'-16' Cut		
4-A-2408	300	LF	Sewer Collections, PVC, Gravity Pipe (Replace), 8" Diameter, 16'-20' Cut		
4-A-2110	500	LF	Sewer Collections, PVC, Gravity Pipe (Replace), 10" Diameter, 0'-8' Cut		
4-A-2210	300	LF	Sewer Collections, PVC, Gravity Pipe (Replace), 10" Diameter, 8'-12' Cut		
4-A-2310	300	LF	Sewer Collections, PVC, Gravity Pipe (Replace), 10" Diameter, 12'-16' Cut		
4-A-2410	300	LF	Sewer Collections, DIP, Gravity Pipe (Replace), 10" Diameter, 16'-20' Cut		
4-A-2312	200	LF	Sewer Collections, PVC, Gravity Pipe (Replace), 12" Diameter, 12'-16' Cut		
4-A-2412	200	LF	Sewer Collections, PVC, Gravity Pipe (Replace), 12" Diameter, 16'-20' Cut		
4-A-2114	200	LF	Sewer Collections, PVC, Gravity Pipe (Replace), 15" Diameter, 0'-8' Cut		
4-A-2214	200	LF	Sewer Collections, PVC, Gravity Pipe (Replace), 15" Diameter, 8'-12' Cut		
4-A-5120	100	LF	Sewer Collections, PVC, Gravity Pipe (Replace), 18" Diameter, 0'-8' Cut		
4-A-5220	100	LF	Sewer Collections, PVC, Gravity Pipe (Replace), 18" Diameter, 8'-12' Cut		

Item No.	Apprx. Quan.	Unit	Description	Unit Price	Total Price Figures
4-A-5124	100	LF	Sewer Collections, PVC, Gravity Pipe (Replace), 24" Diameter, 0'-8' Cut		
4-A-5224	100	LF	Sewer Collections, PVC, Gravity Pipe (Replace), 24" Diameter, 8'-12' Cut		
4-A-5324	100	LF	Sewer Collections, PVC, Gravity Pipe (Replace), 24" Diameter, 12'-16' Cut		
4-A-5424	100	LF	Sewer Collections, PVC, Gravity Pipe (Replace), 24" Diameter, 16'-20' Cut		
4-A-2116	1000	LF	Add/Deduct cost for providing 8” DIP in lieu of PVC pipe		
4-A-2216	800	LF	Add/Deduct cost for providing 10” DIP in lieu of PVC pipe		
4-A-2316	200	LF	Add/Deduct cost for providing 12” DIP in lieu of PVC pipe		
4-A-2416	200	LF	Add/Deduct cost for providing 16” DIP in lieu of PVC pipe		
4-A-5166	100	LF	Add/Deduct cost for providing 18” DIP in lieu of RCP		
4-A-5366	100	LF	Add/Deduct cost for providing 24” DIP in lieu of RCP		
B			***Manholes, Drops & Other***		
4- B-1510	20	EA	Sewer Manhole, Frame and Cover (Replace), 24" Dia., Standard Load		
4-B-1540	10	EA	Sewer Manhole, Frame and Cover (Replace), 24" Dia., Traffic Load		
4-B-1710	5	EA	Sewer Manhole, Height Adjustment, 12" or Less		
4-B-1720	5	EA	Sewer Manhole, Manhole Raising to Grade, > 12”		

Item No.	Apprx. Quan.	Unit	Description	Unit Price	Total Price Figures
4-B-1340	50	VF	Cementitious Manhole Lining, 48” Diamter		
4-B-1048	10	EA	Sewer Manholes, 48" Diameter, 0' to 10' Depth (Pre-Cast Concrete or HDPE)		
4-B-1148	25	VF	Sewer Manholes, 48" Diameter, >10' Depth (Pre-Cast Concrete or HDPE)		
4-B-1060	5	EA	Sewer Manholes, 60" Diameter, 0' to 10' Depth (Pre-Cast Concrete or HDPE)		
4-B-1160	25	VF	Sewer Manholes, 60" Diameter, >10' Depth (Pre-Cast Concrete or HDPE)		
4-B-1072	5	EA	Sewer Manholes, 72" Diameter, 0' to 10' Depth (Pre-Cast Concrete or HDPE)		
4-B-1172	25	VF	Sewer Manholes, 72" Diameter, >10' Depth (Pre-Cast Concrete or HDPE)		
4-B-1650	3	EA	Sewer Manhole, Inside Drop Connection, 0' to 5' Drop		
4-B-1660	25	VF	Sewer Manhole, Inside Drop Connection, Additional VF		
C			***Laterals & Cleanouts***		
4-C-1010	8	EA	Service Lateral Reconnect 4"-6" Diameter - 0-8' Depth, up to 16 LF		
4-C-1012	10	EA	Service Lateral Reconnect 4"-6" Diameter - 8-12' Depth, up to 16 LF		
4-C-1020	50	LF	Service Lateral Reconnect Additional LF (Over 12/16’ Length), Any Depth		
4-C-1022	3	EA	Service Lateral Replacement 4"-6" Diameter - 0-8' Depth, up to 12 LF		

Item No.	Apprx. Quan.	Unit	Description	Unit Price	Total Price Figures
4-C-1024	3	EA	Service Lateral Replacement 4"-6" Diameter - 8-12' Depth, up to 12 LF		
4-C-1026	3	EA	Service Lateral Replacement 4"-6" Diameter – 12-16' Depth, up to 16 LF		
4-C-1030	3	EA	Service Lateral Replacement 4"-6" Diameter >20' Depth, up to 16 LF		
4-C-3010	10	EA	Sewer, Cleanout, Install at ROW on Private Service		
I			***Internal Pipe Inspection***		
4-I-1005	15000	LF	Sewer, Internal Pipe Inspection, 6" to 24" Diameter		
4-I-6010	500	LF	Sewer, Internal Pipe Inspection, Service Lateral, 4" to 6" Diameter		
J			***Manhole Inspection***		
4-J-1010	10	EA	Locate & Expose Manhole, Street		
K			***SSES Testing & Other Items***		
4-K-1030	1000	LF	Sewer, SSES, Smoke Testing		
4-K-2030	200	EA	Sewer, SSES, Dye Testing & Observation		
4-K-2040	25	EA	Sewer, SSES, Dye Testing, CCTV & Observation		
L			***Internal Cleaning***		
4-L-1002	8000	LF	Sewer, Internal Cleaning 6" to 10" Diameter		
4-L-1004	6000	LF	Sewer, Internal Cleaning 12" to 15" Diameter		

Item No.	Apprx. Quan.	Unit	Description	Unit Price	Total Price Figures
4-L-1006	3000	LF	Sewer, Internal Cleaning 18" to 30" Diameter		
4-L-1205	10	TON	Sewer, Debris Removal and Disposal from Cleaning		
M			***Point Repairs***		
4-M-1008	10	EA	Sewer, External Point Repair, 6" to 15" PVC, 0' to 8' Depth		
4-M-1115	100	LF	Sewer, External Point Repair, 6" to 15" PVC, 0' to 8' Depth, Additional LF		
4-M-1028	10	EA	Sewer, External Point Repair, 6" to 15" PVC, >8' to ≤ 12' Depth		
4-M-1125	100	LF	Sewer, External Point Repair, 6" to 15" PVC, >8' to ≤ 12' Depth, Additional LF		
4-M-1048	5	EA	Sewer, External Point Repair, 6" to 15" PVC, >12' to ≤ 16' Depth		
4-M-1135	50	LF	Sewer, External Point Repair, 6" to 15" PVC, >12' to ≤ 16' Depth, Additional LF		
4-M-1088	5	EA	Sewer, External Point Repair, 6" to 16" DIP, >20' Depth		
4-M-1155	50	LF	Sewer, External Point Repair, 6" to 16" DIP, >20' Depth, Additional LF		
4-M-1018	10	EA	Sewer, External Point Repair, 18" to 24" RCP, 0' to 8' Depth		
4-M-1120	100	LF	Sewer, External Point Repair, 18" to 24" RCP, 0' to 8' Depth, Additional LF		
4-M-1038	10	EA	Sewer, External Point Repair, 18" to 24" RCP, >8' to ≤ 12' DEpthDepth		

Item No.	Apprx. Quan.	Unit	Description	Unit Price	Total Price Figures
4-M-1130	100	LF	Sewer, External Point Repair, 18" to 24" RCP, >8' to ≤ 12' Depth, Additional LF		
N			***Sewer Rehabilitation Cured-In-Place Pipe***		
4-N-1008	500	LF	Cured-In-Place Pipe 8" Dia.- 6 mm Thk		
4-N-1010	250	LF	Cured-In-Place Pipe 10" Dia.-6 mm Thk		
4-N-1012	250	LF	Cured-In-Place Pipe 12" Dia.- 7.5 mm Thk		
4-N-1115	100	LF	Cured-In-Place Pipe 15" Dia.-9 mm Thk		
4-N-1218	100	LF	Cured-In-Place Pipe 18" Dia.- 12 mm Thk		
4-N-1021	100	LF	Cured-In-Place Pipe 21" Dia.-15 mm Thk		
4-N-1024	100	LF	Cured-In-Place Pipe 24" Dia.-15 mm Thk		
4-N-1310	200	EA	Robotic Reconnection of Existing Service Laterals		
S			***Pipe-Bursting***		
4-S-1210	500	LF	Sewer, Replacement with HDPE Using Pneumatic or Static Pipe-bursting Methods, 8" & 10" to 10" Diameter, All Depths		
4-S-1310	200	LF	Sewer, Replacement with HDPE Using Pneumatic or Static Pipe-bursting Methods, 8" to 12" Diameter, All Depths		

Item No.	Apprx. Quan.	Unit	Description	Unit Price	Total Price Figures
4-S-1510	500	LF	Sewer, Replacement with HDPE Using Pneumatic or Static Pipe-bursting Methods, 10" & 12" to 12" Diameter, All Depths		
4-S-1610	200	LF	Sewer, Replacement with HDPE Using Pneumatic or Static Pipe-bursting Methods, 10" to 15" Diameter, All Depths		
4-S-1810	200	LF	Sewer, Replacement with HDPE Using Pneumatic or Static Pipe-bursting Methods, 12" & 15" to 15" Diameter, All Depths		
4-S-2010	200	LF	Sewer, Replacement with HDPE Using Pneumatic or Static Pipe-bursting Methods, 15" & 18" to 18" Diameter, All Depths		
4-S-2110	200	LF	Sewer, Replacement with HDPE Using Pneumatic or Static Pipe-bursting Methods, 15" & 21" to 21" Diameter, All Depths		
4-S-2210	200	LF	Sewer, Replacement with HDPE Using Pneumatic or Static Pipe-bursting Methods, 18" & 21" to 21" Diameter, All Depths		
4-S-2310	200	LF	Sewer, Replacement with HDPE Using Pneumatic or Static Pipe-bursting Methods, 18" & 24" to 24" Diameter, All Depths		
4-S-2410	200	LF	Sewer, Replacement with HDPE Using Pneumatic or Static Pipe-bursting Methods, 21" & 24" to 24" Diameter, All Depths		
4-S-5005	50	VF	Pipeburst Launch Pits, 0-10' Depth		

Item No.	Apprx. Quan.	Unit	Description	Unit Price	Total Price Figures
4-S-5010	50	VF	Pipeburst Launch Pits, 10-20' Depth		
4-S-5015	50	VF	Pipeburst Launch Pits, > 20' Depth		
4-S-5020	50	VF	Pipeburst Receiving Pits, 0-10' Depth		
4-S-5025	50	VF	Pipeburst Receiving Pits, 10-20' Depth		
4-S-5030	50	VF	Pipeburst Receiving Pits, > 20' Depth		
4-S-5035	25	EA	Additional Cost For Pre-Splitting Equipment (6”-24” Diameter, Any Depth)		
T			***Jack-and-Bore***		
2-I-8410	50	LF	Jack-N-Bore, 18" Casing, 8" Carrier Pipe		
2-I-8415	50	LF	Jack-N-Bore, 18" Casing, 10" Carrier Pipe		
2-I-8420	50	LF	Jack-N-Bore, 22" Casing, 12" Carrier Pipe		
2-I-8430	50	LF	Jack-N-Bore, 24" Casing, 15" Carrier Pipe		
2-I-9605	5	EA	Bore and Receiving Pit - 0-10' Depth		
2-I-9615	5	EA	Bore and Receiving Pit - 10-15' Depth		
2-I-9630	15	VF	Extra Depth for Bore and Receiving Pit: Greater than 15' in Depth, All Pipe		
6			**RESTORATION**		

Item No.	Apprx. Quan.	Unit	Description	Unit Price	Total Price Figures
A			***Asphalt Pavement***		
6-A-1410	1000	SY	Asphalt Pavement Patch - Sewer Trench Section		
6-A-1412	500	SY	Asphalt Pavement Patch - GDOT Standard 1401		
6-A-3410	2000	SY	Asphalt Pavement Milling and Resurfacing, Less than or Equal to 2500 SY per site – GDOT Roads (Only)		
B			***Concrete Pavement***		
6-B-5410	300	SY	Concrete Pavement Patch - Open Cut Work in GA DOT Roads, GA DOT Standard 1401		
E			***Curb & Gutter***		
6-E-2410	50	LF	Concrete and Granite, Curb and Gutter		
F			***Sidewalks/Ramps/Driveways***		
6-F-3410	100	SY	Concrete Sidewalk		
6-F-3440	100	SY	Asphalt or Cementitious Concrete Driveway Replacement		
T			***Trees & Shrubs***		
6-T-1015	30	EA	Tree Restoration – All Except Pine		
6-T-5110	20	EA	Native Bush Restoration on Private Property - up to 36” Diameter		
6-T-5210	50	SY	Ivy Restoration		
U			***Seeding & Sodding***		

Item No.	Apprx. Quan.	Unit	Description	Unit Price	Total Price Figures
6-U-2450	200	SY	Seeding		
6-U-3410	100	SY	Sodding		
			Subtotal (Bid Item Sections 1,2,4 and 6)		
9			**ALLOWANCES**		
Z			***General Allowances***		
9-Z-2410	1	LS	Miscellaneous Modifications	$54,313.70	$54,313.70
9-Z-2420	1	LS	Hazardous Material Disposal	$13,578.43	$13,578.43
9-Z-2440	1	LS	Additional Noise Control, Traffic Control, Erosion Control, Public Relations, and Customer Service	$13,578.43	$13,578.43
9-Z-2460	1	LS	Tree Removal/Replacement and Arborist Support	$27,156.85	$27,156.85
9-Z-2470	1	LS	Land Acquisition Services	$27,156.85	$27,156.85
9-Z-2480	1	LS	Material Testing	$67,892.13	$67,892.13
9-Z-4420	1	LS	Replacement and Repair of Traffic Control Devices	$13,578.43	$13,578.43
9-Z-4450	1	LS	City Directed Site Restoration (Private Property)	$13,578.43	$13,578.43
9-Z-4460	1	LS	City Directed Additional Work	$27,156.85	$27,156.85
9-Z-4465	1	LS	City Directed Site Restoration (City Property)	$13,578.43	$13,578.43

Item No.	Apprx. Quan.	Unit	Description	Unit Price	Total Price Figures

Subtotal (Bid Item - Section 9 Only) $271,568.52

BID TOTAL, ITEMS 1, 2, 4, 6 AND 9, INCLUSIVE, THE AMOUNT OF (WRITTEN)_____

_____

_____DOLLARS($_____).(FIGURE)

The undersigned declares that he understands that the quantities shown are approximate only and are subject to either increase or decrease and that should the quantities of any of the items of work be increased, the undersigned agrees to do the additional work at the unit prices set forth herein, and should the quantities be decreased, he also understands that payment will be made on the actual quantities installed at the unit bid price, and the undersigned will make no claims for anticipated profits for any decrease in the quantities. Actual quantities will be determined upon completion of the job.

The undersigned also agrees that extra work, if any, will be paid in accordance with Option 2, pursuant to Section 4.1.2. and in accordance with the provisions of those Articles.

Amounts shall be shown in figures, where indicated. In case of discrepancies between the figures shown in the unit prices and the totals, the unit prices shall apply and the totals shall be corrected to agree with the unit prices. The sum of all Bid extensions (of unit prices) plus lump sum items shall take precedence over BID TOTAL.

The bid prices shall include all costs of completion of the work except as otherwise specified in the Contract Documents.

The names and residence addresses of all persons and parties interested in the foregoing bid as principals are as follows:

_____

_____

_____

_____

_____

_____

_____

_____

(Give first and last names in full. In the case of a corporation, give name of president, treasurer, and manager, and in the case of a partnership, give names and addresses of members.)
The undersigned hereby certifies that he is able to furnish labor that can work in harmony with all other elements of labor employed or to be employed on the work.

Notice of acceptance should be mailed, telegraphed, or delivered to the undersigned bidder at the following address:

(Name of Bidder)_____

(Signature of Authorized Representative)_____

(Title)_____

(Business Address)_____

(City and State)_____

(Telephone Number)_____

(Fax Number)_____

Please include any other category /cost criteria and associated cost that will impact the total cost of service

_____

EXHIBIT A.2

<u>WORK ORDERS</u>

EXHIBIT A.2

WORK ORDER FORM

WORK ORDER NO. ____ FOR PROJECT _____

Contractor will complete the Services described below in accordance with the terms and conditions in the Construction Services Agreement.

PROJECT: FC-8412; Annual Contract for Sanitary Sewer Repair Services

SERVICES UNDER WORK ORDER NO. _____:

Contractor shall perform the Services for the purpose of [insert general description of Services to be performed], as more particularly described in the scope of work and accepted proposal from Contractor attached and incorporated herein as **Exhibit 1** to this Work Order No. ___, including the attached schedule of unit prices for performing the required Services.

NOTICE TO PROCEED:

[Check one of the following provisions]

____ Contractor shall commence Work within ___ days of the date of this Work Order.

____ Contractor shall commence Work within ___ days of receipt of a Notice to Proceed Work issued by the City.

TIME FOR COMPLETION: [identify with specificity all dates for Services from Contractor]

a. Substantial Completion:

b. Final Completion:

c. Milestones:

PAYMENT METHOD:

____ Option 1: (Section 4.1.1); or

____ Option 2: (Section 4.1.2)

WORK ORDER MAXIMUM PAYMENT AMOUNT:

[Insert total amount of payment for this Work Order based on unit prices in **Exhibit A.1**]

REQUIRED SUBMITTALS AND DOCUMENTATION:

[INSERT ANY AND ALL DOCUMENTATION REQUIRED FOR SERVICES, INCLUDING ALL SHOP DRAWINGS, AS-BUILTS REQUIRED FOR FINAL ACCEPTANCE]

LIST OF APPROVED MATERIALS AND EQUIPMENT: (IF REQUIRED FOR A WORK ORDER, LIST ALL APPROVED MANUFACTURERS AND EQUIPMENT PROVIDERS APPROVED IN CONTRACTOR'S PROPOSAL)

FINAL ACCEPTANCE OF WORK REQUIREMENTS:

[INSERT SPECIAL TERMS FOR FINAL ACCEPTANCE OF WORK, INCLUDING ANY SIGN OFFS, DELIVERABLES]

CONFIRMATION THAT SERVICES AS LISTED ARE REQUESTED BY THE CITY

By: _____
Name:
Title:

Dated this _____ day of _____, 20__

CONFIRMATION OF SERVICE ASSIGNMENT ACCEPTED BY CONTRACTOR

By: _____
Name:
Title:

Dated this _____ day of _____, 20__

ATTACHMENT TO

EXHIBIT A.2 WORK ORDER FORM

SCOPE OF WORK/ACCEPTED CONTRACTOR PROPOSAL

SCHEDULE OF UNIT PRICES FOR CONSTRUCTION SERVICES FOR EXHIBIT A TO WORK ORDER FORM

PERSONNEL:

[LABOR CATEGORY] $_____ PER _____

[LABOR CATEGORY] $_____ PER _____

[List the labor categories and labor rates required to perform the Services per Exhibit A.1]

MATERIALS:

[List the unit prices for materials required to perform the Services per Exhibit A.1]

OTHER REIMBURSABLE EXPENSES:

[List the other reimbursable expenses required to perform the Services per Exhibit A.1]

EXHIBIT B

LEGISLATION

EXHIBIT C

SUPPLEMENTAL CONDITIONS and TECHNICAL SPECIFICATION

SECTION 01010

Summary of Work

PART 1 – GENERAL

1.01 SCOPE

A. The Work to be performed under this Contract shall consist of furnishing all plants, tools, equipment, materials, supplies, and manufactured articles and furnishing all labor, transportation, and services, including fuel, power, water, and essential communications, and performing all work, or other operations required for the fulfillment of the Contract in strict accordance with the Contract Documents. The Work shall be complete, and all work, materials, and services not expressly indicated or called for in the Contract Documents, which may be necessary for the complete and proper construction of the Work in good faith, shall be provided by the Contractor as though originally so indicated, at no increase in cost to the City.

B. The quantities shown on the bid form are estimates for work to be performed within the contract duration and are not intended to be a guarantee for a minimum amount of work. As such, a unit price contract type has been selected to execute the work, which includes the intended scope of work based upon the available information. The assigned means, methods and quantities described herein are subject to revision by the City for various reasons including but not limited to, unforeseen utility conflicts, discovery of subsurface rock strata, unforeseen pipeline encasement, contaminated or hazardous soils, etc.

C. The work will be presented to the Contractor by assignment issuance, in a grouping known as a “Work Order.” Each Work Order shall have a unique Work Order number and contain a list of the Project(s) contained therein. Each Project will have a map, description of the Work required, and/or construction Drawings therein. A Work Order may contain up to any number of Projects.

D. The “Work Order” will include a location map and/or construction Drawings and available asset data for each Project assigned. The “Work Order” will indicate specific locations and scopes of work developed by the City based on survey and inspection data received through the Sewer System Evaluation Survey (SSES) Program.

E. The Contractor must conduct an initial site visit within 8 hours of issuance of a Work Order.

F. A Cost Proposal, Schedule of Work, and Work Plan will be generated by

the Contractor and submitted to the City's Project Team within 24 hours after issuance of the "Work Order" for review and approval by the City for each individual Work Order. Contractor shall cooperate with the City to assist with developing a Scope of Work, Schedule, Work Plan, or providing needed information for a particular Work Order, as may be requested by the City. The Contractor will acknowledge receipt of a Work Order issued by the City and their intent to complete the prescribed work by executing a Work Authorization document provided by the City.

G. The Contractor shall commence work on a Work Order issued by the City within 48 hours of the date of the Work Order issuance. All documents must be approved prior to commencement of work for the Work Order. If the Contractor is unable to commence work within the specified time, the City must be notified within a 24 hour period including a written justification.

H. Failure to complete the work within the duration of the approved schedule may prevent the Contractor from being assigned any additional work until all work is completed.

I. Each individual Work Order shall be considered complete upon final acceptance of work by the City of Atlanta. All deliverables documenting completion of the work must be submitted and approved by the City before final acceptance of the work. Deliverables are due to the City within 30 days after completion of the Work Order.

J. Any work reassigned to the Contractor by the City to correct measures due to defective materials or improper installation shall be completed at the Contractor's own expense. The Contractor shall report to the City's Project Manager (or his/her designee) within three (3) working days upon receipt of the notice for such work. The City reserves the right to employ additional personnel, contractors, etc., as deemed necessary to obtain correct installation should the contractors fail to correct defective materials or improper installation measures within three (3) working days of receipt of the notice of such work. Actual cost by other Contractors at the City's directive will be charged to the Contractor on the following monthly payment request.

K. The Contractor must provide a 24-hour Point of Contact for each Work Order.

1.02 PROJECT LOCATION

Multiple work locations will be provided by Work Order issuance or assignment. Probable work assignments include sewers within separated sanitary areas and

combined sewer areas and may also include inter-jurisdictional sewer sections immediately outside the City of Atlanta boundary.

1.03 WORK COVERED BY THE CONTRACT DOCUMENTS

A. The Contract comprises the cleaning and assessment of selected portions of the sewer collection system in the City of Atlanta, as designated by the Engineer throughout the course of the work. The Work includes but is not limited to the below items:

1. Open-cut/Replacement
2. Pipe-burst Method
3. Cured-in-Place Lining (CIPP)
4. Jack and Bore Method
5. Sliplining
6. Rock excavation
7. Debris removal and disposal
8. Manhole frame replacement and height adjustment.
9. Manhole inspection.
10. Manhole Rehabilitation
11. Lateral Replacement and reconnects.
12. Bypass pumping.
13. Preconditioning and cleaning of manholes and sewers.
14. CCTV and sonar pipeline inspection which may include remote operated platform vehicle.
15. Clearing, disposal, and grading of access routes.
16. Right-of-way clearing.
17. Erosion control.

18. Traffic control.

19. Smoke Testing

20. Dye Testing

21. Flow Monitoring

22. Grouting and abandonment

23. Removal and replacement of pavement, hardscape, & landscaping features.

B. Other associated or incidental work not specifically identified herein may be required with the above work items. In any case, all work shall be performed according to the requirements of the Contract Documents and a Work Plan should be developed and coordinated with the City for that purpose.

1.04 WORK COORDINATION

A. The Contractor shall coordinate the Work with third parties (such as public utilities and telephone company) in areas where such parties may have rights to underground property or facilities; and request maps or other descriptive information as to the nature and location of such underground facilities or property.

B. The Contractor shall also coordinate the Work with owners of private and public property where access is required for the performance of the work. Legal access will be acquired by the Contractor in accordance with Section 01351.

C. The City will work with the Contractor to assign and schedule the work in a logical and efficient format. However, all items in this contract shall be priced such that each item can be assigned independently or combined with other items at the City's sole discretion in regard to both quantity and scope. There shall be no consideration of any claim for extra payment arising from a decision by the City to assign potential work items under this contract in any combination or in combination with another contract utilizing alternate technologies. The Contractor shall perform only those work items directed by the Department of Watershed Management at the prices specified herein. (For example, if the City determines that a line segment shall be cleaned but not televised or lined, the same unit price for cleaning shall apply.)

1.05 CONDITIONS AT THE SITES

A. The Contractor shall make all necessary investigations to determine the existence and location of underground utilities.

B. The Contractor will be held responsible for any damage to and for maintenance and protection of existing utilities, structures, and personal property.

C. Nothing in these Contract Documents or associated mapping and/or Drawings provided shall be construed as a guarantee that such utilities are in the location indicated or that they actually exist, or that other utilities are not within the area of the operations.

D. The City is not responsible for unforeseen conditions encountered.

END OF SECTION 01010

[This page intentionally left blank]

SECTION 01040

Project Coordination

PART 1 – GENERAL

1.01 SCOPE

A. Management of the Project shall be with a logical method of construction planning, inspection, scheduling and cost value documentation.

B. The work under this Section includes all surface and subsurface condition inspections and coordination by the Contractor necessary for the proper and complete performance of the Work.

C. This Section applies to the work of every division and every section of these Specifications.

D. The Contractor shall become thoroughly familiar with the requirements of the Contract Documents, as well as jobsite conditions and the work of separate contractors (if any), and shall make any adjustments necessary to maintain the Project schedule.

E. Close coordination will be required by the Contractor with the City, Engineer, other authorities having jurisdiction, separate contractors (if any), and others having an interest in the Project. Through close coordination, the Contractor will ensure that all work on the site, access to and from the site, and the general conduct of the operations is maintained in a safe and efficient manner, and that disruption and inconvenience to existing streets and property are minimized.

1.02 SITE CONDITIONS

A. Inspection:

1. Prior to performing any work under a section, the Contractor shall carefully inspect the installed work of other trades and verify that all such work is complete to the point where the work under that section may properly commence.

2. The Contractor shall verify that all materials, equipment, and products to be installed under a section may be installed in strict accordance with the original design and pertinent reviewed shop drawings.

3. Observation of the Work by the Engineer or others shall not be interpreted as relieving the Contractor of its responsibility for the coordination of all Work, superintendence of the Work, or scheduling and direction of the Work.

B. Discrepancies:

1. In the event of discrepancy, immediately notify the Engineer.

1.03 EXISTING FACILITIES

A. The existing services shall remain in FULL operation while new construction is in progress.

B. The Contractor shall coordinate the work with the City so that the construction will not restrain or hinder the operation of the existing wastewater facilities. If, at any time, any portion of the wastewater facilities is out of service, the Contractor must obtain prior approval from the City as to the date, time, and length of time that portion of the wastewater facilities is out of service.

C. Connections to the existing facilities or alteration of existing facilities will be made at times when the piping or facility involved is not in use, or at times, established by the City, when the use of piping of facility can be conveniently interrupted for the period needed to make the connection or alteration.

D. After having coordinated the work with the City, the Contractor shall notify the Engineer of the time, time limits, and methods of each connection or alteration and have the approval of the Engineer before any work is undertaken on the connections or alterations.

E. Before any roadway or facilities are blocked off, the City's approval shall be obtained to coordinate operations for these facilities, and any signage, plating, bypass pumping, sinking of bypass conduits, ramping, or any other temporary accommodation work shall be implemented by the contractor as directed by the City.

1.04 COORDINATION

A. Carefully coordinate work with all other trades and subcontractors to insure proper and adequate interface of the work of other trades and subcontractors with the work of every section of these Specifications.

B. The Contractor shall coordinate operations with all utility companies in or adjacent to the area of Contractor's work. The Contractor shall require said utility companies to identify/ field verify location of each of their respective utility and provide drawings as necessary to locate them.

C. The Contractor shall so schedule the Contractor's Work that the Contractor does not interrupt the operation of any existing facility, including water mains and sewers. In the event certain tie-ins or other operations make it necessary to interrupt the operation of existing facilities, the City will be notified and such work will be done at a time and in a manner acceptable to the City /Engineer.

END OF SECTION

[This page intentionally left blank]

SECTION 01055

CONSTRUCTION STAKING

PART 1 GENERAL

1.01 SCOPE

A. Construction staking shall include all of the surveying work required to layout the Work and control the location of the finished Project. The Contractor shall have the full responsibility for constructing the Project to the correct horizontal and vertical alignment, as shown on the Drawings, as specified, or as ordered by the Engineer.

B. The Contractor shall assume all costs associated with rectifying work constructed in the wrong location.

1.02 QUALITY ASSURANCE

A. The Contractor shall hire, at the Contractor's own expense, a Surveyor with current registration in the State of Georgia, acceptable to the Owner, to provide project construction staking and confirmation of the vertical and horizontal alignment.

B. Any deviations from the Drawings shall be confirmed by the Engineer prior to construction of that portion of the Project.

1.03 SUBMITTALS

A. Submit name and address of Registered Surveyor to Engineer.

B. On request of Engineer, submit documentation to verify accuracy of construction staking.

C. Submit record drawings in accordance with PART 3 of the Section.

PART 2 PRODUCTS

(NOT USED)

PART 3 EXECUTION

3.01 PROJECT CONDITIONS

A. The Drawings provide the location of principal components of the Project. The

Engineer may order changes to the location of some of the components of the Project or provide clarification to questions regarding the correct alignment.

B. The Engineer will provide the following:

1. One vertical control point on the Project site with its elevation shown on the Drawings.

2. A minimum of two horizontal control points on the Project site with their coordinates shown on the Drawings.

3.02 GENERAL

A. From the information shown on the Drawings and the information to be provided as indicated in paragraph 3.01 above, the Contractor shall:

1. Be responsible for establishing GPS control coordinate control system, setting reference points and/or offsets, establishment of baselines, and all other layout, staking, and all other surveying required for the construction of the Project.

   a. The horizontal position of all points shall be referenced to the North American datum of 1983 (1986 adjustment) in the Georgia State Plane West 1002 Coordinate System.
   b. The vertical position of all points shall be referenced to the North American Vertical datum of 1988.
   c. All coordinate values shall be delivered as grid coordinates in US Survey Feet.
   d. The minimum data accuracy required for all record drawings shall be +/- 0.10 USFT (one tenth of one foot).

2. Safeguard all reference points, stakes, grade marks, horizontal and vertical control points, and shall bear the cost of re-establishing same if disturbed.

3. Stake out the limits of construction to ensure that the Work does not deviate from the indicated limits.

4. Stake out the pipeline horizontal and vertical alignment.

5. Be responsible for all damage done to reference points, baselines, center lines and temporary bench marks, and shall be responsible for the cost of re-establishment of reference points, baselines, center lines and

temporary bench marks as a result of the operations.

6. Maintain a complete, accurate log of all control and survey work as it progresses.

B. Baselines shall be defined as the line to which the location of the Work is referenced, i.e., edge of pavement, road centerline, property line, right-of-way or survey line.

3.03 STAKING PRECISION

A. The precision of construction staking shall match the precision of components location xxxxxx. Staking of utilities shall be done in accordance with standard accepted practice for the type of utility.

B. The precision of construction staking required shall be such that the location of the sanitary and/or storm sewers can be established for construction and verified by the Engineer. Where the location of components/appurtenances of the sanitary or storm sewer (i.e. manholes, drain inlets, etc.) are not dimensioned, the establishment of the location of these components shall be based upon scaling these locations if drawings are not provided with relation to readily identifiable land marks, i.e. survey reference points, power poles, manholes etc.

C. Paved Surfaces: The Contractor shall establish a reference point for establishing and verifying the paving subgrade and finished grade elevations. Any variance with grades shall be identified by the Contractor and confirmed by the Engineer prior to constructing the base.

D. The Contractor’s attention is directed to Section 01040, Paragraph 3.06.

3.04 RECORD DRAWINGS

A. Sanitary and Storm Sewers

1. The Contractor shall submit record drawings which show the final installed location of the sewer and storm drain and survey data for all installed sanitary and storm sewer pipe and service connections. Survey data shall consist of final coordinates for all manholes, catch basins, tunnel and casing limits, CIP/pipe bursting delineations,service connections and invert elevations for all manholes, catch basins and other structures.

B. The record drawings shall also indicate the horizontal and vertical location, dimensions and materials of all utilities encountered during excavation.

C. 2 full size hard copies of record drawings shall be furnished to the Engineer for review. Each record drawing shall be stamped with the name of the Contractor, signed and dated by the Contractor's Project Manager and signed, sealed and dated by the Surveyor. Also provide 2 compact disks containing signed and sealed PDFs of the final record drawings.

D. The Contractor's attention is directed to GC-28.4 and GC-38.5 relative to maintenance and submittal of Record Drawings.

+ + + END OF SECTION 01055 + + +

SECTION 01060

REGULATORY REQUIREMENTS

PART 1 GENERAL

1.01 SCOPE

A. Permits and Responsibilities: The Contractor shall be responsible for complying with all applicable federal, state, county and municipal laws, codes and regulations, in connection with the prosecution of the Work and for obtaining any and all permits including but not limited to NPDES permits for storm water discharges from the Work site.

B. Permits and applications for this project are identified in Part 3 of this Section.

C. The Contractor shall take proper safety and health precautions to protect the Work, the workers, the public and the property of others. Contractor shall comply with all requirements of the permitting authority, whether permits were obtained by the Contractor or not.

PART 2 PRODUCTS

(NOT USED)

PART 3 EXECUTION

3.01 NPDES PERMITS FOR STORM WATER DISCHARGES

A. The Contractor shall comply with the provisions of the Authorization to Discharge under the National Pollutant Discharge Elimination System, Storm Water Discharges Associated with Construction Activity for Infrastructure Construction Projects, Georgia Environmental Protection Division General Permit No. GAR 100002, including but not limited to filing permit applications, filing Notice of Intent (NOI), filing Notice of Termination (NOT), performing inspections and monitoring and performing record keeping as required.

3.02 GDOT ENCROACHMENT PERMITS

A. Portions of this project may be constructed within right of ways under the jurisdiction of Georgia Department of Transportation (GDOT).

B. The Contractor will submit permit applications to GDOT for Right of Way Encroachment for installation of pipelines and appurtenances and connections to existing pipelines for the above areas.

3.03 CITY LANE CLOSURE PERMITS

A. The City/Engineer, in conjunction with the Contractor, will submit permit applications to the City's Department of Public Works, Office of Transportation for all lane/road closures required for completion of the project. Refer to Section 01550, Traffic Regulation.

3.04 OTHER PERMITS

A. The Contractor shall submit applications for and obtain all other permits required in conjunction with completion of the Work of the Contact.

3.05 GENERAL

A. The Contractor shall pay for all remaining permits, fees and licenses required for construction of the project. Payment for all permits, fees and licenses required for construction shall be reimbursed to the Contractor under Allowance Item entitled Special Permit Requirements.

B. The Contractor shall examine all permits and agreements and conform to the requirements contained therein, including the purchase of additional bonds or insurance as specified therein, and such requirements are hereby made a part of these Contract Documents as though the same were set forth herein. Failure to examine the permit and agreement applications will not relieve the Contractor from compliance with the requirements stated therein.

+ + + END OF SECTION 01060 + + +

SECTION 01091

CODES AND STANDARDS

PART 1 GENERAL

1.01 DESCRIPTION

A. Whenever reference is made to conforming to the standards of any technical society, organization, body, code or standard, it shall be construed to mean the latest standard, code, specification or tentative specification adopted and published at the time of advertisement for Bids. This shall include the furnishing of materials, testing of materials, fabrication and installation practices. In those cases where the Contractor's quality standards establish more stringent quality requirements, the more stringent requirement shall prevail. Such standards are made a part hereof to the extent which is indicated or intended.

B. The inclusion of an organization under one category does not preclude that organization’s standards from applying to another category.

C. In addition, all work shall comply with the applicable requirements of local codes, utilities and other authorities having jurisdiction.

D. All material and equipment, for which a UL Standard, an AGA or NSF approval or an ASME requirement is established, shall be so approved and labeled or stamped. The label or stamp shall be conspicuous and not covered, painted, or otherwise obscured from visual inspection.

E. The standards which apply to this Project are not necessarily restricted to those organizations which are listed in Article 1.02.

1.02 STANDARD ORGANIZATIONS

A. Piping and Valves:

ACPA	American Concrete Pipe Association
ANSI	American National Standards Institute
API	American Petroleum Institute
ASME	American Society of Mechanical Engineers
AWWA	American Water Works Association
CISPI	Cast Iron Soil Pipe Institute
DIPRA	Ductile Iron Pipe Research Association
FCI	Fluid Controls Institute
MSS	Manufacturers Standardization Society

NCPI	National Clay Pipe Institute
NSF	National Sanitation Foundation
PPI	Plastic Pipe Institute
	Uni-Bell PVC Pipe Association

B. Materials:

AASHTO	American Association of State Highway and Transportation Officials
ANSI	American National Standards Institute
ASTM	American Society for Testing and Materials

C. Painting and Surface Preparation:

NACE	National Association of Corrosion Engineers
SSPC	Steel Structures Painting Council

D. Aluminum:

AA	Aluminum Association
AAMA	American Architectural Manufacturers Association

E. Steel and Concrete:

ACI	American Concrete Institute
AISC	American Institute of Steel Construction, Inc.
AISI	American Iron and Steel Institute
CRSI	Concrete Reinforcing Steel Institute
NRMA	National Ready-Mix Association
PCA	Portland Cement Association
PCI	Pre-stressed Concrete Institute

F. Welding:

ASME	American Society of Mechanical Engineers
AWS	American Welding Society

G. Government and Technical Organizations:

APHA	American Public Health Association
APWA	American Public Works Association
ASA	American Standards Association
ASAE	American Society of Agricultural Engineers
ASCE	American Society of Civil Engineers
ASQC	American Society of Quality Control
ASSE	American Society of Sanitary Engineers

CFR	Code of Federal Regulations
CSI	Construction Specifications Institute
EPA	Environmental Protection Agency
FS	Federal Specifications
IAI	International Association of Identification
ISEA	Industrial Safety Equipment Association
ISO	International Organization for Standardization
ITE	Institute of Traffic Engineers
MUTCD	Manual of Uniform Traffic Control Devices
NBFU	National Board of Fire Underwriters
NFPA	National Fluid Power Association
NBS	National Bureau of Standards
NISO	National Information Standards Organization
OSHA	Occupational Safety and Health Administration
SPI	Society of the Plastics Industry, Inc.
USDC	United States Department of Commerce
WEF	Water Environment Federation

H. Roadways:

AREMA	American Railway Engineering and Maintenance–of-Way Association
GDOT	Georgia Department of Transportation

I. Plumbing:

AGA	American Gas Association
PDI	Plumbing Drainage Institute
SPC	SBCC Standard Plumbing Code

J. Equipment:

AFBMA	Anti-Friction Bearing Manufacturers Association, Inc.
AGMA	American Gear Manufacturers Association
CEMA	Conveyor Equipment Manufacturers Association
DEMA	Diesel Engine Manufacturers Association
OPEI	Outdoor Power Equipment Institute, Inc.
PTI	Power Tool Institute, Inc.
RIA	Robotic Industries Association
SAMA	Scientific Apparatus Makers Association

1.03 SYMBOLS

Symbols and material legends shall be as scheduled on the Drawings.

PART 2 PRODUCTS

(NOT USED)

PART 3 EXECUTION

(NOT USED)

+ + + END OF SECTION 01091 + + +

SECTION 01200

Measurement and Payment

PART 1 – GENERAL

1.01 SCOPE

A. Work includes furnishing all plant, labor, equipment, tools, materials, and performing all operations required to complete the Work satisfactorily, in-place, as specified by work order or assignment.

B. All costs of required items of work and incidentals necessary for the satisfactory completion of the Work shall be considered as included in the Total Bid. The cost of work not directly covered by the pay items shall be considered incidental to the contract and no additional compensation shall be allowed.

C. The Contractor shall take no advantage of any apparent error or omission on the Drawings or Specifications, and the Engineer shall be permitted to make corrections and interpretations as may be deemed necessary for fulfillment of the intent of the Contract Documents.

1.02 UNIT PRICE ITEMS

A. Payment for all work shall be in accordance with the unit price bid items in the Bid Schedule and shall be full compensation for all labor, materials, and equipment required to furnish, install, construct, and test the Work covered under the unit price bid item. Work for which there is no price schedule item will be considered incidental to the Work and no additional compensation shall be allowed.

B. Payment will be made only for the actual quantities of work performed in compliance with the Drawings and Specifications. The Contractor will be paid an amount equal to the approved quantity times applicable unit price. Any unused balance of the unit price work shall revert to the City upon completion of the project.

C. All unit price work shall be considered as part of the Work to be performed within the time limits specified elsewhere for Substantial Completion and Project Completion. No increase in contract time will be allowed for increases in quantities of unit price work performed beyond the quantities shown in the Bid Schedule, unless it can be demonstrated that the additional Work performed under the unit price item is on the critical path of the Project Schedule.

1.03 MEASUREMENT OF QUANTITIES

A. The basis of payment will be the unit prices and/or lump sum amounts included in the Contractor's bid. The distances stated for pipeline and manhole rehabilitation work are the City's best estimate of work to be performed by this contract. Payment for pipeline rehabilitation, pipe replacement or any other items of work for which payment will be made on a linear foot or vertical foot basis will be based on the Contractor's measurement, contingent on verification by City inspectors. Nothing in this Section shall be construed as providing for additional payment beyond the bid items. Prices will include, but not limited to all labor, equipment and materials necessary for a complete installation in accordance with the Contract Documents. All incidental work necessary for a complete and operable project shall be included in the price bid. No payment will be made for partially completed bid items.

B. Measurement Devices

1. Scales shall be inspected, tested, and certified by the applicable Weights and Measures Departments within the past year and shall be of sufficient size and capacity to accommodate the conveying vehicle.
2. Metering devices shall be inspected, tested, and certified by the applicable department within the past year.
3. Volume shall be determined by cubic dimension by multiplying mean length by mean width by mean height or thickness.
4. Area shall be determined by square dimension by multiplying mean length by mean width or height.
5. Linear measurement shall be measured by linear dimension, along the item centerline or mean chord.
6. Stipulated price measurement shall include items measured by number, weight, volume, area, length, or combination thereof as appropriate

Item	Description	Method of Measurement
AC	Acre	Field Measure
AL	Allowance	
CY	Cubic Yard	Field Measure within limits specified or shown, or measured in vehicle by volume, as specified
DAY	Calendar Day	
EA	Each	Field Count
GAL	Gallon	Field Measure
HR	Hour	
LB	Pound(s)	Weight Measure by Scale
LF	Linear Foot	Field Measure

Item	Description	Method of Measurement
LS	Lump Sum	Unit is one; no measurement will be made
SF	Square Foot	
SY	Square Yard	
TON	Ton	Weight Measure by Scale (2,000 lb)
VF	Vertical Foot	Field Measure

PART 2 – BID ITEMS

2.01 GENERAL CONDITIONS

A. Mobilization/Project Management/Demobilization – Bid Item 1-A-1000: Measurement for payment will be lump sum not to exceed 3% of the bid total. Payment will constitute full compensation for all costs associated with mobilization and demobilization of equipment and Contractor's field offices as directed by the Engineer for the project. Payment will also constitute payment for associated Project Management and Project Controls Tools tasks. Payment will be remitted for mobilization up to a maximum of 50% of the amount bid upon Engineer verification that the Contractor has fully provided all necessary labor, equipment, materials, field offices, parking areas, staging areas, fencing, signage, project signs (four each) per General Conditions and Special Conditions Section SC-14, magnetic vehicle signs and yard signs per Section 01580, administrative items, etc. necessary to commence the Work. The remainder of the amount bid will be remitted upon satisfactory demobilization and restoration of the various project areas upon completion of the Work, provision of all project record documentation and any other close-out type of documentation required at the end of the contract including any term renewal or extensions. No additional or separate payment will be made for mobilization or demobilization for the purposes of contract renewal or extension. No additional or separate payment will be made for installation or maintenance of the Contractor's field offices as required by Section 01590.

B. Work Zone Staging and Traffic Control (All Streets) – Bid Item 1-D-1405: The Measurement for payment will be Lump Sum. Payment will constitute full compensation for all costs for furnishing, installing, maintaining and removing work zone staging and temporary traffic control of roadway based upon the current functional classification of the affected roadway as defined by the Federal Highway Administration. The unit price bid shall include, but not be limited to furnishing, installation, maintenance and removing all traffic control devices, temporary signage, message boards, temporary pavement markings and shall include flagging, permits and other means necessary for safe guidance and protection of vehicular and pedestrian traffic through the Work Zone to complete the entire scope of work which is located within or requires traffic control of the designated roadway and site conditions. No

additional payment will be remitted for multiple work zone staging or traffic control setups. The unit price bid should take into consideration the possible use of uniformed traffic control officers in the event officers are required for permit purposes or requested by the City. All traffic control measures and plans shall conform to the requirements of the Manual on Uniform Traffic Control Devices (MUTCD), Part 6 (Temporary Traffic Control), latest edition, as published by the US DOT / FHWA.

The contractor shall submit proposed traffic control plans to the Engineer at least 48 hours before the work begins for authorization.

C. Warning Signs - Bid Item 1-D-1415: Warning signs shall be 48-inches by 48-inches (48" x 48"), minimum, with a black legend on an orange background. All signs used at night shall be retroreflective or illuminated. Signs shall be adequately stabilized to provide support that is not easily blown over or displaced. All costs for the signs, including positioning, installation, maintenance, and removal shall be included in the unit price. Payment shall be made at the unit price bid per each per day for signs suitably installed and maintained.

D. Qualified Safety Officer – Bid Item 1-F-1305: Measurement for payment will be per each work assignment. Payment will constitute full compensation for all costs for providing a dedicated, full time, qualified safety coordinator in accordance with GC-18 as approved by the Engineer. The price shall include all costs associated with the provision, including transportation. Payment will be made on the basis of the actual duration of time the safety officer is provided, not to exceed the contract term.

E. Public Information Representative – Bid Item 1-L-1700: Measurement for payment will be per each work assignment. Payment will constitute full compensation for all costs for providing a public information representative in accordance with Section 01351. The unit price shall also include all costs associated with labor, transportation, supplies, communications, and equipment to comply with Section 01351. Payment will be made on the basis of the actual duration of time the representative is provided, not to exceed the contract term.

2.02 SITEWORK - GENERAL

A. Clearing, Disposal & Grading for Access Route - Bid Item 2-H-2910: Measurement for payment will be per linear foot (LF). Payment will constitute full compensation for all costs associated with clearing, disposal, rough grading and geotextile underlayment for grading and preparation work necessary to install a 10 foot wide, 6 inch deep construction access route in accordance with Section 02112 – Route Clearing, when authorized by the Engineer. The payment shall be made per linear feet of access route measured along the centerline of site access route from the point of

commencement of construction to the furthest point of required access. Payment shall include, but not be limited to furnishing arborist tree survey, site plan, arborist tree removal permit, construction layout, clearing, grubbing, debris removal, grading, geotextile underlayment, labor, equipment and materials for the establishment of erosion control (except those erosion control items paid for elsewhere). Clearing shall also include removal of all interfering or objectionable material in the site access way, temporary drainage, and grading as necessary to facilitate equipment access to the work site. Payment will not be remitted for light clearing, disposal and grading of vegetative areas comprised of trees, brush or shrubs less than 6 inch caliper as this is considered light brush typically displaced with construction equipment.

B. Unsuitable Soil Haul Off & Replace - Bid Item 2-H-3020: All soil determined to be unsuitable for backfill shall be removed and replaced. Soil shall be determined to be unsuitable by the Engineer in accordance with Specification Section 02200 – Earthwork in non paved areas. All costs for removal, hauling and disposal of the unsuitable material, as well as the cost for hauling and placing imported fill material shall be included in the unit price. Payment will be made on the basis of cubic yards (CY) removed with replacement amount not to exceed the minimum backfill limits indicated on GC-2/ Detail 14, trench type I for flexible or rigid pipe installation. Payment will not be remitted for removal and replacement of unsuitable soil beyond the aforementioned trench limits regardless of the actual excavation/ trench dimension unless prior written authorization is provided by the Engineer.

C. Additional Pipe Bedding Material - Bid Item 2-H-3025: Measurement for payment will be per cubic yard (CY) installed. Payment will constitute full compensation for all costs associated with additional pipe bedding material. Additional pipe bedding material is classified as bedding material needed to stabilize the base of a trench in addition to the pipe bedding specified in the Section 02200 and Drawing Details, provided that the trench excavation is properly de-watered per Specification Section 02140. The cost to install additional bedding, including all labor, equipment and materials, shall be included in the unit cost bid.

D. Surface Stone, In-Place for Access Route - Bid Item 2-H-3900: Measurement for payment will be per ton of surge stone (4-inch to 6-inch size rip-rap) acceptably placed in accordance with Section 02112 – Route Clearing. Payment will constitute full compensation for all costs for all blading, finish grading, surge stone, and compaction work required to provide a stone surfaced route competent to support the weight of all vehicles and equipment required to perform the sewer rehabilitation work. Stone tonnage shall be measured by load delivery tickets containing a printout of the net stone weight from a certified scale. Each delivery ticket shall be initialed and dated by the City Inspector on the date of placement. A copy of all applicable delivery tickets shall accompany each request for

payment of this item. Payment under this item shall include full compensation

E. Surface Stone and Filter Fabric, Removal from Access Route – Bid Item 2-H-3910: Measurement for payment will be per linear foot (LF). Payment will constitute full compensation for all costs associated with removal of the surge stone and filter fabric installed to access sewer rehabilitation site(s). The unit price shall include all costs associated with the removal and disposal of stone and filter fabric, as well as backfill, compaction, grading and grassing to restore the site. The Contractor shall include all costs for transportation of stone and/or filter fabric, and/or disposal of debris resulting from the removal and site restoration. Surge stone and filter fabric shall only be removed by the Contractor when the road encroaches on private property outside of the sewer easement, or when directed by the Engineer.

F. Rock Excavation – Bid Item 2-H-7410: All costs for excavation, hauling and disposal of rock encountered in trenches shall be included in the unit price. The unit price bid shall only include the additional cost over the conventional excavation cost already included in the rehabilitation/replacement work items. Payment will be made on the basis of cubic yards (CY) excavated and removed in accordance with Section 02200. The rock shall be stripped and measured by the Engineer at five foot (5 ft.) intervals, and the quantity calculated as the actual length multiplied by the average depth multiplied by the average trench width. Trench width shall be a minimum of twenty-four inches (24”), and a maximum of three inches (3”) wider on each side of the pipe bell. Measurement of rock shall deduct percentage of earth in any one area of rock stripped and measured. Rock shall be excavated to a minimum depth of six inches (6”) below the pipe bell.

G. Tree Protection Fence - Bid Item 2-M-3010: Measurement for payment will be per linear foot (LF) for tree protection fence suitably installed and maintained per Section 02112. Payment will constitute full compensation for all costs associated with tree protection fencing, including installation, maintenance, repair, and removal.

H. Erosion Control Items: No payment will be made for any portion of the Project for which temporary erosion and sedimentation controls are not properly maintained. Quantities for payment shall be based upon actual quantity constructed and authorized by the Engineer. Erosion and sedimentation control measures shall comply with the requirements of Sections 02125 and 02270 of these Specifications; the Georgia Erosion and Sedimentation Act of 1975, as amended; the Manual for Erosion and Sediment Control of Georgia, latest edition; local soil erosion and sedimentation control ordinances; and the Contract Drawings.

1. Sediment Barrier (Silt Fence – Type C) - Bid Item 2-S-1225: Measurement for payment will be per linear foot (LF) for Type C silt fence suitably installed and maintained per the Manual for Erosion and Sediment Control of Georgia, latest edition. Payment will constitute full compensation for all costs associated with silt fence, including installation, maintenance, repair, and removal.

2. Inlet Sediment Trap (Sd2)- Bid Item 2-S-1240: Measurement for payment will be per each (EA) for inlet sediment traps suitably installed and maintained per the Manual for Erosion and Sediment Control of Georgia, latest edition. Payment will constitute full compensation for all costs associated with inlet sediment traps at existing storm water inlet structures, including installation, maintenance, repair, and removal. Contractor shall be responsible for installing the number of sedimentation traps to adequately capture silt, thus minimizing silt leaving construction sites.

I. Flowable Fill - Bid Item 2-X-1410: Measurement for payment will be per cubic yard (CY) complete in-place and accepted. Payment will constitute full compensation for furnishing and installing controlled low strength flowable fill concrete in accordance with Specification Section 03300 – Concrete Work, including labor, materials, equipment and any miscellaneous formwork (if required).

J. Pavement Patch - Manhole Adjustment/Raising – Bid Item 2-X-5410: Contractor will be paid for removal and disposal of existing pavement and placement of a new concrete patch, adjustment/ leveling the existing manhole frame to the pavement surface which is not performed in conjunction with other open cut type rehabilitation work such as replacement, pipe-bursting, new manhole installation, etc. Measurement will be per each reinforced concrete patch complete in-place and accepted. The unit price shall include, but not be limited to, labor, equipment, materials, transportation, and tools required to perform the work in accordance with the Drawings, Detail 20 on sheet GC-3, and Specification Section 03300 – Concrete Work. Traffic control measures for work in low-traffic/residential areas shall be included in the unit price. Additional traffic control measures required for work in high-traffic/commercial areas will be paid for separately when authorized by the Engineer (see Paragraph 2.01(D) above). Pavement patch includes backfill that matches in kind the existing material cross-section of the street or the applicable City of Atlanta standard street pavement section, whichever is more stringent. Regardless of material section used, City of Atlanta standards governing compaction and strengths of materials shall apply. Payment for soils and concrete testing shall be made separately by the City. No additional payment will be made for removing and replacing damaged pavement resulting from poor manhole construction techniques. Separate payment will be made for pavement

patches or pavement restoration in performance of for replacement of defective manhole frame & covers with the following Bid item.

2.03 SEWER COLLECTIONS

A. Sewer Collections, PVC, DIP or RCP Gravity Pipe (Replace), 8" to 24" Diameter, All Depth Categories; Open Cut - Bid Items 4-A-2108, 4-A-2208, 4-A-2308, 4-A-2408, 4-A-2110, 4-A-2210, 4-A-2310, 4-A-2410, 4-A-2312, 4-A-2412, 4-A-2114, 4-A-2214, 4-A-5120, 4-A-5220, 4-A-5124, 4-A-5224, 4-A-5324, AND 4-A-5424: Measurement for payment will be per linear foot (LF) of pipe for gravity sewer replacement open cut measured from inside face of manhole to inside face of manhole. Depth of cut shall be the average depth of the pipeline as measured from the pipe invert to the existing ground level at the upstream and downstream manhole. Payment will constitute full compensation for all costs including but not limited to all labor, equipment, transportation, tools, dewatering, bypass pumping, pavement saw-cutting, excavation, removal and disposal of excavated material if replaced with imported material per Section 02200, existing pipe removal and disposal (size and material may vary), pipe bedding and haunching, pipe to manhole connections, pipe cutting, rebuilding existing manhole inverts and pipe beveling as required for a complete installation of new piping in accordance with Section 02730. No additional payment will be made for replacement of defective materials. No separate payment will be made for cutting or beveling pipe. All associated costs for testing, post-installation cleaning (if required), and post-installation CCTV inspection for quality control shall be included under this item. Payment may be withheld due to failure to submit all post-installation CCTV video and other required quality control documentation for the work. No separate payment shall be made for survey work performed by or for the Contractor in the establishment of reference points, bench marks, cut sheets, limits of rights-of-way or easement, including their restoration, as well as centerline or baseline points. Traffic control measures for work in low-traffic/residential areas shall be included in the unit price. Traffic control measures required for work in high-traffic/commercial areas will be paid when authorized by the Engineer (see Paragraph 2.01(C) above).

B. Add/Deduct Cost for Providing 8" to 16" DIP in lieu of PVC Pipe - Bid Items 4-A-2116, 4-A-2216, 4-A-2316, 4-A-2416, 4-A-5166, and 4-A-5366: Measurement for payment will be per linear foot (LF). Payment will constitute full compensation for the additional/reduced (whichever applies) material and labor cost for furnishing and handling ductile iron pipe (DIP) instead of PVC pipe for open cut replacement, when directed to do so by the Engineer. All associated costs for pipe installation, equipment, air testing, material testing, post-installation cleaning (if required), post-installation CCTV inspection for quality control, post-installation infiltration testing, and related

procedures and materials necessary shall be included in Open Cut bid items and not included herein. No additional payment will be made for replacement of defective materials.

C. Standard Manhole Frame and Cover (Replace), 24" and Standard Load - Bid Item 4-B-1510: All costs for replacing manhole frames and covers will be included in the unit price, including, but not limited to, labor, equipment, transportation, tools, pavement removal/disposal/replacement, and all other related procedures and materials necessary to produce the results specified in Section 02491 – Rehabilitation of Sanitary Sewer Manholes. Contractor will advise the Engineer in writing in the daily report identifying each manhole with replaced frame and cover. Measurement will be per each as appropriate. Traffic control measures for work in low-traffic/residential areas shall be included in the unit price. Additional traffic control measures required for work in high-traffic/commercial areas will be paid for separately when authorized by the Engineer (see Paragraph 2.01(D) above).

D. Sewer Manhole, Manhole Frame and Cover (Replace), 24" and Traffic Load, All Types - Bid Items 4-B-1540: All costs for replacing manhole frames and covers will be included in the unit price, including, but not limited to, labor, equipment, transportation, tools, pavement removal/disposal/replacement, and all other related procedures and materials necessary to produce the results specified in Section 02491 – Rehabilitation of Sanitary Sewer Manholes. Contractor will advise the Engineer in writing in the daily report identifying each manhole with replaced frame and cover. Measurement will be per each as appropriate. Traffic control measures for work in low-traffic/residential areas shall be included in the unit price. Additional traffic control measures required for work in high-traffic/commercial areas will be paid for separately when authorized by the Engineer (see Paragraph 2.01(D) above).

E. Sewer Manhole, Height Adjustment, 12" or Less - Bid Item 4-B-1710: All costs for uncovering and/or adjusting each manhole to grade or higher will be included in the unit price, including, but not limited to, labor, equipment, transportation, tools, manhole vacuum testing and all other related procedures and materials necessary to produce the results specified in Section 02491 – Rehabilitation of Sanitary Sewer Manholes. Contractor will advise the Engineer in writing prior to proceeding Measurement shall be per each manhole for removing the casting frame and building up the chimney section of the manhole no more than 12 inches (reuse existing casting frame and cover). There shall be no distinctions made for diameter of the manhole or its material composition. No separate payment shall be made for re-setting existing manhole frames and covers. This work shall be considered an integral part of raising manholes. Traffic control measures for work in low-traffic/residential areas shall be included in the unit price. Additional traffic control measures required for work in high-traffic/commercial areas

will be paid for separately when authorized by the Engineer (see Paragraph 2.01(D) above). Payment for all soils and concrete testing shall be made separately by the City.

F. Sewer Manhole, Manhole Raising to Grade, >12" – Bid Item 4-B-1720: Measurement for payment will be per vertical foot (VF) of manhole replaced exclusive of the manhole frame height. No separate payment will be made for 12" or less height adjustment Bid Item 4-B-1710 above. Payment will constitute full compensation for all labor, materials, equipment, transportation, tools, manhole vacuum testing and all other related procedures and materials necessary to produce the results specified in Section 02491 – Rehabilitation of Sanitary Sewer Manholes. The Contractor will advise the Engineer in writing prior to proceeding. There shall be no distinctions made for diameter of the manhole or its material composition. This work shall be considered an integral part of raising manholes. Traffic control measures for work in low-traffic/residential areas shall be included in the unit price. Additional traffic control measures required for work in high-traffic/commercial areas will be paid for separately when authorized by the Engineer (see Paragraph 2.01(B) above). Payment for soils and concrete testing shall be made separately by the City.

G. Cementitious Manhole Lining – Bid Item 4-B-1340: Cementitious manhole lining shall be measured per vertical foot of manhole. It shall include all manhole surface preparation and cleaning, patching, sealing, lining, flow control/bypass pumping, clean up, inspection, quality assurance testing (manhole vacuum testing), and any other work or materials necessary to complete the work for up to thirty (30) vertical feet of depth. Depth (VF) for payment shall be measured from the downstream invert up to the bottom of the frame casting. Payment will include all costs associated with the liner in accordance Specification Section 02491 – Rehabilitation of Sanitary Sewer Manholes for cementitious based lining systems. Traffic control measures for work in low-traffic/residential areas shall be included in the unit price. Traffic control measures required for work in high-traffic/commercial areas will be paid when authorized by the Engineer (see Paragraph 2.01(D) above).

H. Sewer Manholes, 48" Diameter Size, 0' to 10' Depth - Bid Item 4-B-1048: Measurement for payment will be per each (EA). Payment will constitute full compensation for all costs for installing new pre-cast concrete manholes complete in accordance with Section 02491 and Section 02730. The unit price bid shall include but not be limited to excavation, manhole bedding, base, riser section(s), cone, anti-flotation measures (if required), chimney, frame, cover, steps, sealant, flexible piping connections, invert, bench(s), trough, connecting the pipes to the manhole, backfill and manhole vacuum testing. Traffic control measures for work in low-traffic/residential areas shall be included in the unit price. Traffic control measures required for work in

high-traffic/commercial areas will be paid when authorized by the Engineer (see Paragraph 2.01(C) above).

I. Sewer Manholes, 48" Diameter Size, Greater than 10' Depth - Bid Item 4-B-1148: Measurement for payment will be per vertical foot (VF) from the top of the manhole frame and cover to the invert at the outgoing pipe minus 12 feet. Payment will constitute full compensation for the additional VF beyond the lower 12 foot portion of manhole structure which shall include, but not be limited to additional excavation, backfill, and manhole riser installation costs for a complete installation. Payment under this item will NOT include furnishing of the manhole bedding, base, riser section(s), anti-flotation measures (if required), steps, invert, bench(s), trough, connecting the pipes to the manhole, manhole vacuum testing or traffic control costs which are included with Bid Item(s) 4-B-1048 and 4-B-1060 above.

J. Sewer Manholes, 60" Diameter Size, 0' to 10' Depth - Bid Item 4-B-1060: Measurement for payment will be per each (EA). Payment will constitute full compensation for all costs for installing new pre-cast concrete manholes complete in accordance with Section 02491 and Section 02730. The unit price bid shall include but not be limited to excavation, manhole bedding, base, riser section(s), cone, anti-flotation measures (if required), chimney, frame, cover, steps, sealant, flexible piping connections, invert, bench(s), trough, connecting the pipes to the manhole, backfill and manhole vacuum testing. Traffic control measures for work in low-traffic/residential areas shall be included in the unit price. Traffic control measures required for work in high-traffic/commercial areas will be paid when authorized by the Engineer (see Paragraph 2.01(C) above).

K. Sewer Manholes, 60" Diameter Size, Greater than 10' Depth - Bid Item 4-B-1072: Measurement for payment will be per vertical foot (VF) from the top of the manhole frame and cover to the invert at the outgoing pipe minus 12 feet. Payment will constitute full compensation for the additional VF beyond the lower 12 foot portion of manhole structure which shall include, but not be limited to additional excavation, backfill, and manhole riser installation costs for a complete installation. Payment under this item will NOT include furnishing of the manhole bedding, base, riser section(s), anti-flotation measures (if required), steps, invert, bench(s), trough, connecting the pipes to the manhole, manhole vacuum testing or traffic control costs which are included with Bid Item(s) 4-B-1048 and 4-B-1060 above.

L. Sewer Manholes, 72" Diameter Size, 0' to 10' Depth - Bid Item 4-B-1072: Measurement for payment will be per each (EA). Payment will constitute full compensation for all costs for installing new pre-cast concrete manholes complete in accordance with Section 02491 and Section 02730. The unit price bid shall include but not be limited to excavation, manhole bedding, base, riser section(s), cone, anti-flotation measures (if required), chimney, frame, cover, steps, sealant, flexible piping connections, invert, bench(s),

trough, connecting the pipes to the manhole, backfill and manhole vacuum testing. Traffic control measures for work in low-traffic/residential areas shall be included in the unit price. Traffic control measures required for work in high-traffic/commercial areas will be paid when authorized by the Engineer (see Paragraph 2.01(C) above).

M. Sewer Manholes, 72" Diameter Size, Greater than 10' Depth - Bid Item 4-B-1172: Measurement for payment will be per vertical foot (VF) from the top of the manhole frame and cover to the invert at the outgoing pipe minus 12 feet. Payment will constitute full compensation for the additional VF beyond the lower 12 foot portion of manhole structure which shall include, but not be limited to additional excavation, backfill, and manhole riser installation costs for a complete installation. Payment under this item will NOT include furnishing of the manhole bedding, base, riser section(s), anti-flotation measures (if required), steps, invert, bench(s), trough, connecting the pipes to the manhole, manhole vacuum testing or traffic control costs which are included with Bid Item(s) 4-B-1048 and 4-B-1060 above.

N. Sewer Manhole, Inside Drop Connection, 0' to 5' Drop – Bid Item 4-B-1650: During the course of the rehabilitation/replacement work, wherever a sewer enters an existing manhole at an elevation higher than 24-inches above the manhole invert, an inside drop connection shall be installed. All costs for installing an inside drop connection in an existing manhole in accordance with Section 02730 will be included in the unit price bid for each drop installed. The price for the inside drop connection shall include fittings, anchor bolts and straps attached to manhole wall, coring of manhole wall (if required), adapter couplings or boots (if required), and non-shrink grout or Class C concrete at wall penetration. Price will also include up to five (5) vertical feet (VF) of drop piping, measured from the flow line of the invert to the flow line of the drop at its entry point into the manhole. Traffic control measures for work in low-traffic/residential areas shall be included in the unit price. Additional traffic control measures required for work in high-traffic/commercial areas will be paid for separately when authorized by the Engineer (see Paragraph 2.01(D) above).

O. Sewer Manhole, Inside Drop Connection, Additional VF – Bid Item 4-B-1660: When it is necessary to install an inside drop connection deeper than 5 vertical feet (VF), the additional VF payment will include the additional piping and anchoring costs beyond the initial depth of 5 vertical feet (VF) included under Item 4-B-1650. Payment under this item will NOT include fittings, anchor bolts and straps attached to manhole wall, coring of manhole wall (if required), adapter couplings or boots (if required), non-shrink grout or Class C concrete at wall penetration, or traffic control costs, all of which are to be covered under Paragraph 2.03(H) above. Measurement for payment shall

be made from the flow line of the invert to the flow line of the drop at its entry point into the manhole.

2.04 SEWER COLLECTIONS – LATERALS AND CLEANOUTS

A. Service Lateral Reconnect 4”-6” Diameter, Any Depth, Up to 16 LF - Bid Items 4-C-1010, and 4-C-1012: Measurement for payment will be per each (EA). Payment will constitute full compensation to re-connect services which have been excavated & exposed in conjunction with open cut mainline replacement, pipe-bursting and external point repair work. Payment for each service re-connection will include tee or wye fitting, tee insert or saddle connection installed on the mainline, replacement of up to 16 linear feet LF of service lateral pipe to accommodate mainline upsize or change in horizontal/vertical alignment, including replacement service line fittings, any additional excavation or pavement saw-cutting, bedding, and backfilling in accordance with the requirements Sections 02200, 02725, 02730 and 02735. All associated costs for testing, post-installation cleaning (if required), and post-installation CCTV inspection for quality control shall be included under this item. Payment may be withheld due to failure to submit all post-installation CCTV video and other required quality control documentation for the work. No separate or additional payment will be provided in the event the City directs the contractor to install ductile iron piping or fittings for the service piping reconnection if the sewer main is designated for future liner installation or conditions warrant provision of ductile iron piping material.

B. Service Reconnection Additional LF (Over 16’ Length), Any Depth – Bid Item 4-C-1020: Measurement for payment will be per linear foot (LF). Payment will constitute full compensation to remove and replace the necessary length (LF) of existing service piping beyond the 16 linear feet section of new service lateral piping included with provision of a service reconnection (Bid Item 4-C-1010 above). Before each exposed service lateral is re-connected, it shall be inspected for defects with a CCTV push-camera manually inserted into the service lateral (CCTV inspection to be paid for separately under Bid Item 4-I-6010). When structural defects are observed during the inspection, the service lateral shall be replaced from the mainline to the right-of-way or easement boundary. The work includes, but is not limited to trench excavation, lateral replacement, connection to the existing lateral and backfill. The additional piping will be paid for at the unit price bid per linear foot with no additional compensation for additional flexible couplings or bends required. Additional piping to be installed in accordance with Sections 02730 and 02735. Separate payment will be made for surface restoration work.

C. Service Lateral Replacement 4”-6” Diameter, Various Depth Categories - Bid Items 4-C-1022, 4-C-1024, 4-C-1026, and 4-C-1030: Measurement for payment will be per each (EA) service lateral replaced. Payment will constitute full compensation to remove, replace and reconnect the existing sewer lateral piping from the sewer main to the right-of-way or easement property boundary in conjunction with sewer main lining, internal point repair OR independent of any sewer main rehabilitation. Each service lateral replacement shall include, but not be limited to excavation, shoring, dewatering, pavement saw-cutting, removal and disposal of excavated material if replaced with imported material per Section 02200, piping and piping products for a complete installation (i.e. sewer main coupling(s), sleeve(s), sewer main tee fitting, wye fitting or saddle the mainline, lateral piping, lateral pipe fittings and lateral connection coupling) at no additional cost. All related costs for testing, post-installation cleaning (if required), and post-installation CCTV inspection for quality control shall be included under this item. Payment may be withheld due to failure to submit all post-installation CCTV video and other required quality control documentation for the work. No separate or additional payment will be provided in the event the City directs the contractor to install ductile iron piping or fittings for the service pipe reconnection. The lateral replacement depth shall be considered the same as the average sewer main depth for measurement and payment purposes regardless of the actual excavation depth required. The average sewer main pipeline depth shall be as measured from the pipe invert to the existing ground level at the upstream and downstream manhole. Separate payment will be made for surface restoration and installation of a new clean-out in conjunction with each service lateral replacement.

D. Sewer, Cleanout, Install at ROW on Private Service - Bid Item 4-C-3010: Measurement for payment will be per each (EA). Payment will constitute full compensation to install a two-way cleanout at the edge of right-of-way or easement boundary complete (including riser piping, cleanout box and/or accessories, cleaning (if necessary), testing and restore the service laterals operation in accordance with Sections 02730, 02735 and Drawing Details. The cleanout shall incorporate all appropriate and necessary couplings to both the service connection and house connection. A cleanout shall be installed in conjunction with ALL service lateral replacements to edge of right-of-way.

2.05 SEWER COLLECTIONS – INTERNAL PIPE INSPECTION AND CLEANING

A. Sewer, Internal Pipe Inspection, 6” to 24” Diameter - Bid Item 4-I-1005: Measurement for payment will be per linear foot (LF) from center of manhole to center of manhole. Payment will constitute full compensation to perform an internal closed circuit television (CCTV) sewer pipe inspection on sewers to be rehabilitated or replaced. No defect coding is required; however, header data and coding of service lateral locations is required. There will be no separate payment made for data delivery. Costs shall include, but not be

limited to, labor, equipment, transportation, setup, tools, and all other related procedures and materials necessary to complete the inspections in accordance with Section 02752 – Internal Sewer Condition Assessment. This item DOES NOT include post CCTV quality control inspection for sewer rehabilitation and replacement work. The cost for post CCTV quality control inspection for sewer rehabilitation and replacement work is to be included in the price of the respective sewer rehabilitation or replacement bid item. Payment shall only be made for the footage of sewer that is inspected commencing with zero footage at the portal of the pipeline associated with the manhole. If a pipe must be repaired before inspection can continue, then that repair will be paid for under the appropriate point repair bid items. Traffic control measures for work in low-traffic/residential areas shall be included in the unit price. Traffic control measures required for work in high-traffic/commercial areas will be paid when authorized by the Engineer (see Paragraph 2.01(C) above).

B. Sewer, Internal Pipe Inspection, Service Lateral, 4" to 6" Diameter - Bid Item 4-I-6010: Measurement for payment will be per linear foot (LF). Payment will constitute full compensation for inspection of service laterals, including, but not limited to, hand held ("Push Camera") CCTV inspection, labor, other equipment, transportation setup, tools, and all other related procedures and materials necessary to complete the inspection in accordance with Section 02752 – Internal Sewer Condition Assessment. The Contractor shall perform service lateral television inspection on all service laterals exposed for open cut replacement, point repairs, HDD, or pipebursting/pushbursting, and/or when directed to do so by the Engineer. This item does not include post-construction CCTV quality control inspection for service lateral rehabilitation or repair work. The cost for post CCTV quality control inspection for service lateral rehabilitation and repair work is to be included in the price of the respective service lateral rehabilitation or replacement bid item and will not be paid for separately. Payment shall only be made for the footage of service lateral that is inspected (when directed by the Engineer) commencing with zero footage at the portal of the pipeline associated with the mainline or at the clean-out. If a defective service lateral must be repaired before inspection can continue, then that service lateral will be replaced from the mainline to the property line, to be paid for separately under lateral reconnection or replacement bid items.

C. Locate & Expose Manholes - Bid Items 4-J-1010: Contractor will be paid for locating and exposing buried manholes on a per each basis. Locating and exposing manholes in a non-street location under twelve (12) inches or less cover shall be considered incidental to the rehabilitation and replacement work, and will not be paid for separately under this item. There shall be no distinctions made for the diameter or invert depth of the manhole exposed. Manholes located beneath brick, cobbles, concrete or asphalt pavement sections will be considered "beneath street section". All other locations shall be considered "non-street section". Payment shall be made

at the bid price for each buried manhole that is acceptably located and exposed and will constitute full compensation for furnishing all labor, materials, tools, and equipment necessary to perform all work.

D. Sewer, SSES, Smoke Testing – Bid Item 4-K-1030: Measurement for payment will be per linear foot (LF) from center of manhole to center of manhole. Payment will constitute full compensation for smoke testing of sewers, including but not limited to labor, equipment, transportation, tools and all other related procedures and materials necessary to produce the results in the form, format and of the quality specified in Section 01532E – Smoke Testing. This item of Work shall be performed solely at the direction of the Engineer. Payment shall be made for the length (LF) of sewer smoked, measured.

E. Sewer, SSES, Dye Testing & Observation - Bid Item 4-K-2030: Contractor shall shall be paid for dye testing, including, but not limited to, labor, equipment, transportation, tools and all other related procedures and materials necessary to produce the results in the form, format and of the quality specified in Section 01532F – Dye Testing. The Contractor shall provide 2 laborers (minimum) for the required duration. This item of Work shall be performed solely at the direction of the Engineer. Payment shall be made for each connectivity verification performed.

F. Sewer, SSES, Dye Testing, CCTV & Observation - Bid Item 4-K-2040: Measurement for payment will be per each (EA). Payment will constitute full compensation for dye testing and CCTV “pull through” inspection, including, but not limited to, labor, equipment, transportation, tools and all other related procedures and materials necessary to provide the test data in the form, format and of the quality specified in Sections 01532F – Dye Testing and Section 02752 – Internal Sewer Condition Assessment. The Contractor shall provide 2 laborers (minimum) for the CCTV camera, as well as 1 additional laborer (minimum) for the required duration. This item of Work shall be performed solely at the direction of the Engineer. Payment shall be made for each connectivity verification performed.

G. Sewer, Internal Cleaning - Bid Items 4-L-1002, 4-L-1004, and 4-L-1006: Measurement for payment will be per linear foot (LF) for the size classification category of sewer acceptably cleaned. Payment will constitute full compensation for sewer cleaning, including but not limited to labor, equipment, transportation, tools, and all other related procedures and materials necessary to produce the results specified in Section 02511 – Preconditioning and Cleaning Manholes and Sewers. Sewers will be cleaned to remove debris or obstructions found in sewers that impede or prohibit the rehabilitation or upsize of sewers, or when directed by the Engineer. All sewer cleaning debris shall be collected and removed from the line through the manhole by bucket, suction, or other means. Sewer cleaning DOES NOT include any special or additional surface preparation

that may be required for certain rehabilitation methods (chemical wash, etc.). The cost for additional surface preparation is to be included in the price of the respective sewer rehabilitation bid item. Traffic control measures for work in low-traffic/residential areas shall be included in the unit price. Traffic control measures required for work in high-traffic/commercial areas will be paid when authorized by the Engineer (see Paragraph 2.01(C) above).

H. Sewer, Debris Removal and Disposal from Cleaning - Bid Item 4-L-1205: Measurement for payment will be per ton for actual tonnage disposed as documented on an official copy of the disposal manifest form or ticket receipt provided by the disposal site. Payment will constitute full compensation for removal, transportation and disposal of debris from manhole or sewer cleaning operations, including but not limited to labor, equipment, transportation, tools, and all other related procedures and materials necessary to produce the results specified in Section 02511 – Preconditioning and Cleaning of Manholes and Sewers. The official copy of the disposal manifest form or ticket receipt must clearly indicate the tonnage disposed, and must be submitted to the Engineer no later than three (3) days after the debris disposal was performed.

2.06 SEWER COLLECTIONS – POINT REPAIRS

A. External Point Repairs (All Diameters, All Pipe Materials, All Depth Categories) – Bid Items 4-M-1008, 4-M-1028, 4-M-1048, 4-M-1088, 4-M-1018, and 4-M-1038: Measurement for payment will be per each (EA) sewer main point repair up to sixteen (16) linear feet in length as measured from the centerline of each connection coupling along the longitudinal axis of the sewer main, rounded to the nearest foot. Payment will constitute full compensation for each external point repair, including, but not limited to labor, materials, equipment, dewatering, bypass pumping, pavement saw-cutting, excavation, removal and disposal of excavated material if replaced with imported material per Section 02200, shoring, disposal of all waste materials, transportation, safely maintaining open pit until repairs are made, installation of new piping, installing flexible repair couplings, post-construction CCTV quality control inspection, and backfill in accordance with Section 02757 – External Point Repair of Sanitary Sewers. Payment may be withheld due to failure to submit all post-installation CCTV video and other required quality control documentation for the work. No separate payment shall be made for concrete collars and couplings or rebuilding pipe penetrations and existing manhole inverts which are considered incidental to the Work. The point repair depth shall be considered the same as the average sewer main depth for measurement and payment purposes regardless of the actual excavation depth required. The average sewer main pipeline depth shall be as measured from the pipe invert to the existing ground level at the upstream and downstream manhole. Each point repair shall include replacing a section of sewer main pipe up to sixteen (16) linear feet in length, replacing up to one (1) service reconnection including

furnishing and installation of necessary service connection pipe, fittings and flexible couplings for a complete reinstatement of the sewer collection piping assembly. Payment will not be remitted to repair any damage to the surrounding areas caused by the Contractor in performance of the Work unless specifically authorized in writing by the Engineer. Traffic control measures for work in low-traffic/residential areas shall be included in the unit price. Traffic control measures required for work in high-traffic/commercial areas will be paid when authorized by the Engineer (see Paragraph 2.01(C) above).

B. External Point Repairs (All Diameters, All Pipe Materials, All Depths), Additional L.F. - Bid Items 4-M-1115, 4-M-1125, 4-M-1135, 4-M-1155, 4-M-1120, and 4-M-1130: Measurement for payment will be per linear foot (LF) of sewer pipe over the sixteen (16) linear feet included in the unit price for an External Point Repair. All length measurements shall be taken as field measurements along the longitudinal axis of the sewer. The depth category shall be the same average sewer main depth as measured for the aforementioned point repair. Payment will constitute full compensation for all costs for additional pipe including but not limited to, labor, equipment, dewatering, bypass pumping, pavement saw-cutting, excavation, removal and disposal of excavated material if replaced with imported material per Section 02200, shoring, disposal of all waste materials, transportation, safely maintaining open pit until repairs are made, installation of new piping and backfill in accordance with Section 02757 – External Point Repair of Sanitary Sewers.

2.07 SEWER COLLECTIONS – CURED-IN-PLACE PIPE

A Cured-In-Place-Pipe, All Diameters - Bid Items 4-N-1008, 4-N-1010, 4-N-1012, 4-N-1115, 4-N-1218, 4-N-1021, 4-N-1024 and 4-N-1310: Measurement for payment will be per linear foot (LF) of sewer acceptably lined based on the actual horizontal length of sewer lined as field measured from center of manhole to center of manhole along the axis of the sewer. The length occupied by the manhole itself shall not be deducted. Payment for the diameter (or dimensions) of the sewer being lined and the wall thickness of the liner will constitute full compensation for the labor, equipment and materials required to furnish and install the work complete. All costs for renewing gravity sewer pipe by cured-in-place pipe (CIPP) liner will be included in the unit prices including but not limited to type testing, wet-out, bypass pumping, pre-liner, insertion, curing, post-installation CCTV inspection for quality control, sealing of connections at manholes, sealing of cut edges in pipe and/or manholes and all other related procedures and materials necessary to complete the pipe lining. Payment may be withheld due to failure to submit all post-installation CCTV video and other required quality control documentation for the work. No payment shall be made for

any portion of CIPP lining attempts that fail and result in other methods used such as open cut. If a section of existing host pipe must be repaired or replaced prior to installation, then that section will be paid for only by the appropriate conventional pipe work / point repair bid item. An additional CCTV inspection shall be allowed for in the Contractor's unit price and work schedule, to be performed one year following the installation of a CIPP liner. Should any fault be found with the repair, the fault shall be rectified as specified by the City. Rectification may include complete removal and renewal of the previously installed liner and re-inspection one year later. Correction of failed CIPP or CIPP deemed defective from mid-warranty internal condition inspection or test reports for structural values, thickness, etc., shall be repaired or replaced at no extra cost to the City. Payment for quality assurance sampling and testing of installed liner will be included in the unit price. Traffic control measures for work in low-traffic/residential areas shall be included in the unit price. Traffic control measures required for work in high-traffic/commercial areas will be paid when authorized by the Engineer (see Paragraph 2.01(C) above).

B. Robotic Reconnection of Existing Services Laterals - Bid Item 4-N-1310: Measurement for payment will be per each (EA). Payment will constitute full compensation to re-connect active services complete and in operation to the lined sewer. Payment for each service re-connection associated with CIPP liners will include the opening of the service tap by robotically cutting the liner insitu and sealing cut edges when directed by the Engineer. This includes CCTV monitoring of the reconnection process, as well as CCTV zoom into each service lateral after reconnection is complete in accordance with Section 02520. There shall be no distinctions made for size of service connection or lateral. If in the course of the work, an existing service connection is omitted and the Contractor must return to that location to reconnect a service, the reconnection shall be made at the unit price bid and there shall be no additional compensation for remobilization or set-up.

2.08 SEWER COLLECTIONS – PIPE-BURSTING

A. Sewer, Replacement with HDPE Using Pneumatic or Static Pipe-bursting Methods, All Depths (All Diameters) – Bid Items 4-S-1210, 4-S-1310, 4-S-1510, 4-S-1610, 4-S-1810, 4-S-2010, 4-S-2110, 4-S-2210, 4-S-2310, and 4-S-2410: Measurement for payment will be per linear foot (LF) of sewer that is replaced by bursting. Payment will constitute full compensation for replacing existing gravity sewer mains with HDPE piping as indicated using pneumatic or static pipe-bursting methods. The unit price bid shall include but not be limited to furnishing of material, installation, equipment, stringing pipe, bypass pumping, lateral reconnection pit excavation, shoring, backfill, removal and disposal of excavated material if replaced with imported material per Section 02200, installing pipe, lubrication, connecting pipes, rebuilding existing manhole wall and invert, air testing, material testing, post-

installation cleaning (if required), post-installation CCTV inspection for quality control, and all other related procedures and materials necessary to complete pipe-bursting in accordance with Section 02725. Payment may be withheld due to failure to submit all post-installation CCTV video and other required quality control documentation for the work. No payment shall be made for any portion of pipe-bursting attempts which fail and result in use of other replacement methods such as open cut. If a section of existing pipe must be otherwise replaced, then that section will paid for only by the appropriate conventional pipe work/ point repair bid item. Traffic control measures for work in low-traffic/residential areas shall be included in the unit price. Traffic control measures required for work in high-traffic/commercial areas will be paid when authorized by the Engineer (see Paragraph 2.01(C) above).

B. Pipebursting Launch Pits (All Depths) - Bid Items 4-S-5005, 4-S-5010, and 4-S-5015: Measurement of payment will be per vertical foot (VF). Payment shall include dewatering, excavation and backfill of pits required for replacing gravity sewer by pipe bursting. Depth of cut (VF) for excavation of pit shall be measured from the installed pipe invert to existing ground level at pipe centerline of horizontal alignment. The unit price shall also include installation and removal of appropriate trench stabilization equipment.

C. Pipebursting Receiving Pits (All Depths) - Bid Items 4-S-5020, 4-S-5025, and 4-S-5030: Measurement of payment will be per vertical foot (VF). Payment shall include dewatering, excavation and backfill of pits required for replacing gravity sewer by pipe bursting. Depth of cut (VF) for excavation of pit shall be measured from the installed pipe invert to existing ground level at pipe centerline of horizontal alignment. The unit price shall also include installation and removal of appropriate trench stabilization equipment.

D. Additional Cost For Pre-Splitting Equipment (6”-24” Diameter, Any Depth) – Bid Item 4-S-5035: The contractor will be paid for the additional cost to furnish and install labor and additional or modified equipment required for pre-splitting of existing cast iron and/ or ductile iron pipelines in conjunction with pipe-bursting work in accordance with the equipment manufacturer recommendations. Payment shall be made for the actual lineal footage of pipeline replaced using the pre-splitting equipment.

2.09 SEWER COLLECTIONS – JACK & BORE

B Sewer, Replacement with HDPE or DIP Using Jack & Bore Method, All Depths (All Diameters) – Bid Items 2-I-8410, 2-I-8415, 2-I-8420, 2-I-8430: Measurement for payment for jack and bore or tunnel installations will be on a per linear foot basis for each location for boring and jacking a steel casing and installing the pipeline therein or constructing a tunnel and

installing the pipeline therein at the location and between the limits as shown and detailed on the Drawings and as specified herein and accepted by the Engineer.

C. Payment of the unit price established in the Bid Schedule for each jack and bore or tunnel installation will be full compensation for all labor, materials, equipment and incidentals required to complete the installation between the limits as shown and detailed on the Drawings.

D. Payment of the unit price established in the Bid Schedule shall include all costs to complete the installation by either method.

E. Payment of the unit price established in the Bid Schedule for each installation shall include furnishing and installing the steel casing pipe or excavation and tunnel construction and all additional work and materials required for the completion of the crossings including furnishing and installing carrier pipe inside the casing or tunnel, annular fill, casing or tunnel end plugs, surface settlement monitoring, all excavation (including rock excavation), sheeting and bracing, dewatering and drainage, cleaning and testing of the pipe, backfill, cleaning the site, sodding and seeding as applicable, and for all else incidental thereto for which separate payment is not provided under other items in the Bid Schedule.

F. Payment shall fully reimburse the Contractor for cooperating with and meeting all the requirements of the Georgia Department of Transportation and the affected railroads relative to construction as may be required or necessary to complete the crossings.

G. Payment shall also be full compensation for excavation, backfill and compaction of jacking and receiving shafts and all steel sheeting left in place for the installation as specified.

2.10 RESTORATION

A. Asphalt Pavement Patch – Sewer Trench Section - Bid Item 6-A-1410: Measurement for payment will be per square yard (SY) of pavement removed and replaced. Payment will constitute full compensation for removal and disposal of existing pavement and placement of new pavement including restoration of existing pavement markings as required for pipeline trench work, pits and service lateral excavations in streets not to exceed the paving limits indicated on Detail G-7 Type III Pavement Replacement in Section 02575. The unit price shall include, but not be limited to, labor, equipment, materials, transportation, and tools required to perform the work in accordance with the Drawings and Specifications. No additional payment will be made for removing and replacing adjacent pavement damaged in performance of the sewer rehabilitation and replacement work. Traffic control measures for work in low-traffic/residential areas shall be included in

the unit price. Traffic control measures required for work in high-traffic/commercial areas will be paid when authorized by the Engineer (see Paragraph 2.01(C) above). Payment for soils testing and concrete shall be made separately by the City.

B. Asphalt Pavement Patch – GDOT Standard 1401 - Bid Item 6-A-1412: Contractor will be paid for removal and disposal of existing asphalt pavement, excavation, backfill, concrete or soil cement base and placement of new asphalt pavement, as required for utility excavations in State roads. The unit price shall include, but not be limited to, labor, equipment, materials, transportation, and tools required to perform the work in accordance with the Georgia Department of Transportation (GDOT) Standard Pavement Patching Details (number 1401). [Note: A copy of the Standard Detail sheet is available online at http://www.dot.state.ga.us/dot/preconstruction/r-o-a-d-s/]. Measurement shall be made per square yard (SY) of pavement removed and replaced. Traffic control measures required for work in high-traffic/commercial areas will be paid for separately (see Paragraph 2.01(D) above). Payment for soils testing and concrete shall be made separately by the City. No additional payment will be made for removing and replacing adjacent pavement damaged in performance of the sewer rehabilitation and replacement work.

C. Asphalt Pavement Milling and Resurfacing, ≤ 2500 SY per site - GDOT Roads Only – Bid Item 6-A-3410: This item shall only be used for State roads when the City is directed the Georgia Department of Transportation to perform milling and resurfacing beyond the construction limits of the utility excavation. Contractor will be paid for removal and disposal of existing asphalt pavement, milling preparation of surface, tack coat and placement of new asphalt pavement (2" typical), in accordance with Specification Section 02575 – Removing and Replacing Pavement. The unit price shall include, but not be limited to, labor, equipment, materials, transportation, and tools required to perform the work where a contiguous area of 2500 square yards or less will be milled and resurfaced at a single location. Measurement shall be made per square yard (SY) of pavement removed and replaced. Traffic control measures required for work in high-traffic/commercial areas will be paid for separately (see Paragraph 2.01(D) above).

D. Concrete Pavement Patch –GDOT Standard 1401 – Bid Item 6-B-5410: Contractor will be paid for removal and disposal of existing concrete pavement, excavation, backfill, and placement of new Class "A" concrete pavement, as required for utility excavations in State roads. The unit price shall include, but not be limited to, labor, equipment, materials, transportation, and tools required to perform the work in accordance with the Georgia Department of Transportation (GDOT) Standard Pavement Patching Details (number 1401). [Note: A copy of the GDOT Standard Pavement Patching Details sheet is available online at http://www.dot.state.ga.us/dot/preconstruction/r-o-a-d-s/]. Measurement

shall be made per square yard (SY) of pavement removed and replaced. Traffic control measures required for work in high-traffic/commercial areas will be paid for separately (see Paragraph 2.01(D) above). Payment for soils testing and concrete shall be made separately by the City. No additional payment will be made for removing and replacing adjacent pavement damaged in performance of the sewer rehabilitation and replacement work.

E. Concrete or Granite Curb and Gutter - Bid Item 6-E-2410: Measurement for payment will be per linear foot (LF) of curb removed and replaced. Payment will constitute full compensation for removing and replacing existing curb and gutter as necessary to complete the sewer rehabilitation or replacement work. Replacement of granite curbs and gutters shall be installed in accordance with the Drawing Detail 15/GC-2 and Section 02532 for Concrete Curbs and Gutters. Traffic control measures for work in low-traffic/residential areas shall be included in the unit price. Traffic control measures required for work in high-traffic/commercial areas will be paid when authorized by the Engineer (see Paragraph 2.01(C) above).

F. Concrete Sidewalk - Bid Item 6-F-3410: Measurement for payment will be per square yard (SY) of concrete sidewalk removed and replaced. Payment will constitute full compensation for removing and replacing a public or private sidewalk in accordance with the Drawings and Section 02530 – Concrete Walks. Traffic control measures for work in low-traffic/residential areas shall be included in the unit price. Traffic control measures required for work in high-traffic/commercial areas will be paid when authorized by the Engineer (see Paragraph 2.01(C) above).

G. Asphalt or Cementitious Concrete Driveway Replacement - Bid Item 6-F-3440: Measurement for payment will be per square yard (SY) of asphalt or concrete driveway removed and replaced. Payment will constitute full compensation for removal and replacement of asphalt or concrete driveways. Replaced driveways shall be installed in accordance with the Drawings and Specifications. Traffic control measures for work in low-traffic/residential areas shall be included in the unit price. Additional traffic control measures required for work in high-traffic/commercial areas will be paid for separately when authorized by the Engineer (see Paragraph 2.01(C) above). Payment for all soils and concrete testing shall be made separately by the City.

H. Tree Restoration (All Diameters, Any Type except Pine) - Bid Item 6-T-1015: Measurement for payment will be per each (EA). Payment will constitute full compensation for removing and replacing trees conflicting with the replacement or rehabilitation work on the sewer, whether on public or private property. Replacement may include removal and replanting, or replacing with a new tree (as directed by the Engineer), provision of tree survey,

arborist support and arborist tree removal permit in accordance with Section 02112 –Route Clearing and Section 02900- Landscaping.

I. Native and Ornamental Bush Restoration on Private Property – up to 36" Diameter - Bid Item 6-T-5110: Measurement for payment will be per each (EA) bush removed and replaced for either native or ornamental types. Payment will constitute full compensation for removing and replacing bushes on private property. Replacement may include removal and replanting, or replacing with a new bush (as directed by the Engineer) in accordance with Section 02900 - Landscaping.

J. Ivy Restoration - Bid Item 6-T-5210: Measurement for payment will be per square yard (SY). Payment will constitute full compensation for removing and replacing ivy on public or private property in accordance with Section 02900 - Landscaping.

K. Seeding – Bid Item 6-U-2450: Measurement for payment will be per square yard (SY). Payment will constitute full compensation for fine grading, fertilizing and seeding previously landscaped areas on public or private property in accordance with Section 02900 – Landscaping. Grass seeding shall match in kind the existing adjacent grass of previously landscaped areas. Soil preparation and/or topsoil shall be included.

L. Sodding – Bid Item 6-U-3410: Measurement for payment will be per square yard (SY). Payment will constitute full compensation for fine grading, fertilizing and sodding previously landscaped areas on public or private property in accordance with Section 02900 – Landscaping. Disturbed areas shall be sodded only when directed to do so by the Engineer.

2.11 ALLOWANCES

A. Allowances specified in the Bid Schedule are to establish a fund to pay the cost of items for which the City could not establish accurate quantities and/or detailed scope of work. This work shall be completed only at the written direction of the Engineer, and the cost of such work shall be approved prior to performance of the work.

B. The Contractor shall be responsible for the payment for these services to the appropriate payee providing such service, and shall submit evidence of payments to the Engineer prior to its inclusion in the progress payments.

C. Payment will be made for invoices submitted by the Contractor subject to the Contract Documents. Contractor will not receive any additional compensation for bond or insurance costs for work executed using allowance funding.

D. Allowance allocations shall only be paid to the Contractor for completed work authorized by the Engineer. All allowance dollar amounts not expended shall revert to the City at the completion of the project. Should the final allowance costs be less than the specified amount of the allowance the Contract will be adjusted accordingly by change order The amount of change order will not recognize any changes in handling costs at the site, labor, overhead, profit and other expenses caused by the adjustment to the allowance item.

E. Allowances have been included in the contract in accordance with Section 01380 for the following:

1. Miscellaneous Modifications – Bid Item 9-Z-2410: An allowance has been established as the value of this item. This allowance shall be used to pay for miscellaneous work to be accomplished at the direction of the Engineer. It shall include items of work consistent with and related to the project which are not shown on the plans but which may be necessary to the successful completion of the Agreement. It is expected that work under this item will be accomplished utilizing construction items established under the other sections of these specifications. All work performed under this section shall comply with the various sections of these specifications which are appropriate to the specific items involved. No work will be allowed under this section without the prior written approval of the Engineer. . This work shall be further described, by the Engineer, in written form and/or on modifications to the drawings or on supplemental drawings. This allowance may be used to pay the costs, where the amounts are determined as specified in General Condition Article GC-42, and as directed by the Engineer.

2. Hazardous Material Disposal – Bid Item 9-Z-2420: An allowance has been established as the value of this item. This allowance is provided for cost associated with removal and disposal of hazardous materials, should any be encountered during the course of the work.

3. Additional Noise Control, Traffic Control, Erosion Control, Public Relations and Customer Service – Bid Item 9-Z-2440: An allowance has been established as the value of this item. This allowance is for provision for special noise abatement equipment or temporary structures for work that must be utilized in sensitive locations or must meet more stringent noise control requirements than those specified in the Contract Special Conditions, Paragraph SC-11. The Engineer will determine when special noise abatement equipment is necessary (e.g. overnight work, work near hospitals, etc.). This allowance may also be utilized to provide additional traffic control, erosion control, public relations or customer service work outside the

original scope of bid items which may be required in order to complete the work. This allowance may be used to pay the costs, where the amounts are determined as specified in General Condition Article GC-42, and as directed by the Engineer.

4. Tree Removal/ Replacement and Arborist Support – Bid Item 9-Z-2460: An allowance has been established as the value of this item. This allowance provides for supplemental arborist services which may be requested by the Engineer to comply with the City of Atlanta tree protection ordinance. This allowance item will not be used for arborist support included in Bid Item 6-T-1015. This allowance may be used to pay the costs, where the amounts are determined as specified in General Condition Article GC-42, and as directed by the Engineer.

5. Land Acquisition Services – Bid Item 9-Z-2470: An allowance has been established as the value of this item. This allowance provides for City acquisition of sewer easements in accordance with Section 01380. This allowance may be used to pay the costs, where the amounts are determined as specified in General Condition Article GC-42, and as directed by the Engineer.

6. Material Testing and Professional Services – Bid Item 9-Z-2480: This allowance shall provide for materials testing, seismic monitoring, structural survey work, and related sewer utility work professional services performed in conjunction with this project at the direction of the City. All work performed under this section shall comply with the various sections of these specifications and industry standards which are appropriate to the specific items involved. In any event, no work will be allowed under this section without the prior written approval by the City.

7. Replacement and Repair of Traffic Control Devices – Bid Item 9-Z-4420: An allowance has been established as the value of this item. This allowance is provided for replacing and/or repairing traffic control devices which may be damaged during traffic accidents. This allowance may also be utilized for replacement and/or repair of traffic signal loop detectors that are damaged or excavated during the course of the work.

8. City Directed Site Restoration (Private Property) – Bid Item 9-Z-4450: An allowance has been established as the value of this item. This allowance is provided for site restoration work on private property outside the scope of the bid items. Site restoration shall only be performed where private property has been damaged during the course of the work, not due to contractor negligence.

9. City Directed Additional Work – Bid Item 9-Z-4460: An allowance has been established as the value of this item. This allowance is provided for related sewer utility work to be performed in conjunction with this project at the direction of the City. All work performed under this section shall comply with the various sections of these specifications and industry standards which are appropriate to the specific items involved. This work shall be further described, by the Engineer, in written form and/or on modifications to the drawings or on supplemental drawings. In any event, no work will be allowed under this section without the prior written approval by the City.

10. City Directed Site Restoration (City Property) – Bid Item 9-Z-4465: An allowance has been established as the value of this item. This allowance is provided for site restoration work on City property outside the scope of the bid items.

PART 3 – PRODUCTS (NOT USED)

PART 4 – EXECUTION (NOT USED)

****END OF SECTION 1200****

(This page intentionally left blank)

SECTION 01310

Scheduling the Work

PART 1 – GENERAL

1.01 SCOPE

A. This section describes the scheduling and progress reporting requirements of the Contract. The primary objectives of the requirements of this Section are:

1. To assist the City and Engineer in evaluating the progress of the Work;

2. To provide for optimum coordination and sequencing of the Work by the City, Contractor and any related work or services provided by other parties which may affect the Project.

3. To permit the timely prediction or detection of events or occurrences that might affect the timely prosecution of the Work.

B. The Contractor shall be required to attend a 1-day training/mentoring session on the use of the Primavera scheduler software, provided by a Primavera Authorized Trainer. Through the Project Control Tools bid item, the Contractor shall provide the training session (fee for the Primavera Authorized Trainer) and Primavera training manuals for each participant as needed. The training session shall be held at the Evans Technology, Roswell, Georgia facility and shall be attended by the Contractor's scheduler(s). The Contractor shall be responsible for the cost of training for additional members of their firm or future retraining, as may be deemed necessary by the Contractor.

1.02 GENERAL SCHEDULING REQUIREMENTS

A. The Work of this Contract shall be planned, scheduled, executed, and reported using the critical path method (CPM). Through the Project Control Tools bid item, the Contractor shall purchase and use the following software program to develop its Schedule Submittal:

1. Primavera Engineering and Construction, version to be specified by the Engineer

B. A comprehensive schedule shall be developed by the Contractor and submitted to the Engineer for review prior to commencement of said

Work. Upon acceptance by the Engineer, the schedule will be merged into the City's overall schedule.

C. The schedule shall be structured on an asset basis (manholes and sewers). The asset identification (ID) numbers are assigned by the City of Atlanta through its geographic information system (GIS). There may be numerous work activities for each asset, depending on the Contractor's choice for work break down, however, each activity must include standard attributes or associated codes as defined in the table below. Separate fields or attributes shall be provided for each activity as illustrated below to enable the City and Engineer to coordinate with the community and others by use of a centralized planning/ scheduling system.

Activity Codes:

		Example	
Required	**Activity Code**	**Code Value**	**Description**
X	***** Area Management District (T13 Global)	North	North Area:
X	Asset Location (T13 Global)	Easement	Asset requires Easement for Access
X	***** Contract Number (T13 Global)	3006007989	FC-3006007989 Sewer Group 1 - Rehabilitation - Pipe Bursting Phase 2 Contract A1
X	Contractor (T13 Global)	IWPC	Inland Waters Pollution Control
X	***** Council District (Global)	1	Council District 1
X	House Number (T13 Global)	82	82
X	***** Neighborhood Planning Unit (Global)	C	NPU C
X	Permit (T13 Global)	1	Utility Permit - Lane Closure
X	Pipe Diameter (T13 Global)	12	Pipe Diameter: 12-inches
X	Priority (Global)	Y	Yes
X	Rehabilitation Method (T13 Global)	REP	Open Cut Replacement
X	***** Sewer Basin (GLOBAL)	South River	South River Basin
X	Street Name (T13 Global)	Aaron Street NW	Aaron Street, NW
X	Structure: From Location (T13 Global)	13850200701	Sewer Group 1 \ Sewershed: UT01BX
X	Structure: To Location (T13 Global)	13850200701	Sewer Group 1 \ Sewershed: UT01BX
	Structure: TEMP. MH From Location (T13)		
	Structure: TEMP. MH To Location (T13)		
X	***** WBS AC Lvl 01 (T13)	04	Rehabilitate Sewer System
X	***** WBS AC Lvl 02 (T13)	04.16	Sewer Group 1
X	***** WBS AC Lvl 03 (T13)	04.16.212	Sewer Group 1 - Rehabilitation - Phase 2 - Pipe Bursting \ Contract A1
X	***** WBS AC Lvl 04 (T13)	70	Construction
X	***** WBS AC Lvl 05 (T13)	70	Construction

*** = Do Not Modify these activity codes values, or descriptions.**

D. At a minimum, the schedule shall include the activities for each rehabilitated asset (sewer pipeline or manhole) as deemed appropriate to clearly illustrate and document the Work. The activities listed below are repetitive for the same type of rehabilitation when organized on an asset

basis and generally considered standard industry practice. This set of standard activities will be used to harmonize multiple rehabilitation contracts by the City and shall not be revised or in text or grouping without approval from the Engineer.

Planning & Administrative Activities by Contract Type:

Description	Contract Type
Bond & Insurance Submittal	ALL
Product Submittals	ALL
Permits	ALL
Right of Entry Acquisition	REHAB
72 Hour Disruption Notice	REHAB
Door Hanger Notification	REHAB
Application for Payment Submission	ALL
Application for Payment Review	ALL
Project Record Submittals	ALL
Project Closeout Document Submittals	ALL

Construction Activities by Rehabilitation Type:

Description	Rehab Type
Pre-Construction Survey	ALL
Locate Existing Utilities	PB, Open Cut, HDD
Install Access Road	ALL
Install/ Maintain/ Remove Traffic Control	ALL
Install/ Maintain/ Remove Bypass Pumping	ALL
Pre-CCTV Existing Pipeline	CIPP, HDD, PB
Rehabilitate Service Laterals	CIPP, PB, HDD, Open Cut
Precondition Existing Pipeline	CIPP
Install Liner/ Reinstate Services	CIPP
Install Launch Pit/ PB / Reinstate Services	PB
Install New Pipeline/ Reinstate Services	Open Cut, HDD
Post CCTV Review	CIPP, PB
Post CCTV Submission to COA	CIPP, PB
Manhole Rehabilitation	MH
Test New Installation	ALL
Site Restoration	ALL
Pavement Replacement	ALL
Asphalt Pavement Milling & Topping	PAVMT

Milestones by Contract Type:

Description	Contract Type
Contract Execution	ALL
Notice to Proceed	ALL
Pre-construction Meeting	ALL
(" ") Public Information Meeting	ALL
Trial Test Methodology Acceptance	ALL
Sewershed (" ") Substantial Completion	ALL
Sewershed (" ") Final Completion	ALL
Contract Substantial Completion	ALL
Contract Final Completion	ALL

E. The Contractor shall typically report progress by sewershed and rehabilitation method.

F. The Schedule Submittal, as defined herein, shall represent the Contractor's commitment and intended plan for completion of the Work in compliance with the Contract completion date and interim milestone dates specified. The Schedule Submittal shall take into account all foreseeable activities to be accomplished by any separate consultants or the City, and interface dates with utility companies, the City's operations, and others. The Schedule Submittal shall anticipate all necessary manpower and resources to complete the Work within the dates set forth.

G. Once reviewed and accepted by the Engineer, the Schedule Submittal will become the Schedule of Record.

H. The Contractor is responsible for determining the sequence of activities, the time estimates of the detailed reconnaissance/investigative and rehabilitation activities, as well as the means, methods, techniques and procedures to be employed. The schedule shall clearly indicate the proposed sequence of work within each sewershed. The Schedule of Record shall represent the Contractor's best judgement of how it will execute the Work in compliance with the Contract requirements. The Contractor shall ensure that Schedule of Record is current and accurate and is properly and timely monitored, updated and revised as Project conditions and the Contract Documents may require.

I. The City will work with the Contractor to assign and schedule the work in a logical and efficient manner. However, all items in this contract shall be priced such that each item can be assigned independently or combined at the City's sole discretion, in regards to both quantity and scope. There shall be no consideration of any claim for extra payment arising from a decision by the City to assign potential work items under this contract in any combination or in combination with another contract utilizing alternate technologies.

1.03 SCHEDULE SUBMITTALS

A. The Contractor shall submit the qualifications of the scheduler(s) proposed to be used on the project immediately after NTP. The scheduler(s) is subject to the approval of the Engineer. The Contractor shall use the services of a scheduler(s) who has verifiable training and credentials in preparing and maintaining a computerized CPM Construction Schedule using Primavera software as specified herein. The qualifications of the scheduler(s) should be a minimum of 4 years experience in project scheduling for civil, structural, architectural, or related engineering disciplines. The scheduler(s) should have direct experience developing, maintaining, updating, modifying project schedules utilitizing Primavera products, ideally Primavera Engineering and Construction. The cost for providing a qualified scheduler(s) shall be included in the Project Control Tools bid item.

B. Within 30 days from receipt of Notice to Proceed, a baseline/ comprehensive schedule shall be submitted by the Contractor to the Engineer for approval. The Contractor shall submit the complete schedule in electronic format as directed by the Engineer. At a minimum, the schedule output shall include the following:

1. Activities with attributes or codes
2. Estimated activity durations in working days. (Not to exceed 15 working days for the construction activities.)
3. All logic ties
4. The critical path activities differentiated from other activities
5. All activities for submittal of shop and working drawings, videos, test results, procurement, fabrication, delivery, installation and testing of critical materials.
6. Related activities shall be grouped on the network diagram
7. A time scale located at the top and/or bottom of the network diagram showing calendar days and months
8. Earliest start date
9. Earliest finish date
10. Actual start date
11. Actual finish date
12. Latest start date
13. Latest finish date
14. Calendar Definition
15. Total float
16. All constraints
17. Lag – No lag is allowed in the baseline/ comprehensive schedule
18. Monetary value of activity (from Schedule of Values)

C. The Contractor shall participate in a review and evaluation of the baseline schedule with the Engineer. Any revisions necessary as a result of this review shall be resubmitted to the Engineer within 10 calendar days after the conference. The mutually acceptable schedule shall then be used by the Contractor for planning, organizing and directing the work and for reporting progress. If the Contractor desires to make changes in its method of performing the Work, he shall notify the Engineer in writing stating the reason for the changes.

D. The Contractor shall demonstrate competence in the use of CPM scheduling through the submission of a fully compliant CPM Construction Schedule with the initial CPM submission. In the event the Contractor fails to provide a baseline schedule in a timely manner or fails to demonstrate competence in the CPM scheduling, the Engineer may direct the Contractor to employ the services of a Scheduling Firm that can demonstrate competence. The Contractor shall comply with such directive at no additional cost to the City.

E. Each activity shall be coded using the following format:

xxxx.yyyyyy

Where xxxx is the last four digits of the contract number (FC #), and yyyyyy is for the Contractor's use according to a template provided by the Engineer at the pre-construction conference.

F. Activities and milestones to appear on the Schedule Submittal shall include, but not be limited to, City reviews that impact the Work, negotiation for Rights of Entry, Easement delineation, obtaining required permits, sitework, paving, submittals, renewal/rehabilitation and testing by pipe segment, coordination requirements, and dates of Substantial and Final Completion.

G. The Engineer shall have the right to require the Contractor to modify any portion of the Contractor's Schedule Submittal, or Recovery Schedule, as herein required, (including cost loading) with the Contractor bearing the expense thereof, which the Engineer reasonably determines to be:

1. Impractical or unreasonable
2. Based upon erroneous calculations or estimates
3. Required to ensure proper coordination by the Contractor of the Work of its subconsultants and with the work or services being provided by any separate consultants
4. Necessary to avoid undue interference with the City's operations
5. Necessary to ensure completion of the Work by the milestone and completion dates set forth in the Contract Documents

6. Required in order for the Contractor to comply with the requirements of this Section or any other requirements of the Contract Documents

7. Not in accordance with the Contractor's actual operations

H. The electronic version of the schedule shall be submitted on a floppy computer disk or CD-R, in a form and format acceptable to the Engineer, including all required submission information resident in the computer system and containing all of the files associated with the schedule.

I. Each week the Contractor will provide the Engineer and Public Information (PI) Office with a detailed 2 week look-ahead schedule. The schedule must be in the format required by the PI Office.

1.04 UPDATING OF THE SCHEDULE / PROGRESS REPORTS

A. The Engineer shall review the Contractor's report of actual progress at each progress meeting. Prepared by the Contractor, said report shall set forth up-to-date and accurate progress. The Contractor in consultation with all principal subconsultants shall prepare said report. The Contractor will perform a complete schedule update on a monthly basis or at the discretion of the Engineer.

1. The Contractor shall submit the updated schedule in electronic format as directed by the Engineer. The Contractor shall submit hard copies of the schedule output including, but not limited to:

   a. 30-day Look-ahead Report including but not limited to planned activities within the next thirty days

   b. Milestones to be completed

2. The Contractor shall provide written explanation of all changes in activity durations, relationships, and constraints with the schedule output. Changes will require written approval by the Engineer.

B. The Schedule Report of the Contractor shall show the activities, or portions of activities, completed during the reporting period, the actual start and finish dates for these activities, remaining duration and estimated completion dates for activities currently in progress.

C. At the progress meeting a total review of the Project will take place including but not limited to, the following:

1. Current update of the Schedule of Record in format as prescribed by Engineer

2. Anticipated detailed construction activities for the subsequent report period

3. Critical items pending

4. Contractor requested changes to the Schedule of Record

D. The Contractor shall submit a narrative with the progress report which shall include, but not be limited to, a narrative describing actual Work accomplished during the reporting period, a description of problem areas, current and anticipated delaying factors and their impact, explanations of corrective actions taken or planned, any proposed newly planned activities or changes in sequence, and proposed logic for a Recovery Schedule, if required, as further described herein.

E. No invoice for payment shall be submitted and no payment whatsoever will be made to the Contractor until the Schedule of Record, and narrative reports as defined herein, are updated.

1.05 SCHEDULE REVISIONS

A. Should the Contractor desire to or be otherwise required under the Contract Documents to make modifications or changes in its method of operation, its sequence of Work or the duration of the activities in the Schedule of Record, it shall do so in accordance with the requirements of this Specification Section and the Contract Documents. The approved Schedule of Record may only be revised by written approval of the Engineer as provided herein.

B. The Contractor shall submit requests for revisions to the Schedule of Record to the Engineer using the Schedule Revision Form provided by the Engineer. The Contractor shall identify revisions and description of logic for rescheduling work and substantiate that the milestone and completion dates will be met as listed in the Contract Documents. Proposed revisions acceptable to the Engineer and City will be approved in writing and incorporated into the Schedule of Record.

C. Requests for revision will be accompanied by evidence acceptable to the Engineer that the Contractor's subcontractors are in agreement with the proposed revisions.

D. If there are separate consultants on the Project, the approval of the separate consultants shall be obtained to make the proposed schedule revisions. If accepted by the Engineer and City, the revisions shall be binding upon the Contractor and all separate consultants on the Project.

E. The impact of all change orders to this Contract shall be included in the project schedule.

1.06 RECOVERY SCHEDULE

A. Should the updated Schedule of Record, at any time during the Contractor's performance show that, in the sole opinion of the Engineer, the Contractor is behind schedule for any milestone or completion date for any location or category of work, the Contractor, at the request of the Engineer, shall prepare a Schedule Revision for the purpose of displaying recovery. The revision shall identify how the Contractor intends to reschedule its Work in order to regain compliance with the Schedule of Record within thirty (30) calendar days.

B. The Contractor shall prepare and submit to the Engineer a one month maximum duration Recovery Schedule, incorporating the best available information from subconsultants, subcontractors and others which will permit a return to the Schedule of Record at the earliest possible time. The Contractor shall prepare a Recovery Schedule to the same level of detail as the Schedule of Record. The Recovery Schedule shall be prepared in coordination with other separate consultants on the Project.

C. Within two (2) calendar days after submission of the Recovery Schedule to the Engineer, the Contractor shall participate in a conference with the Engineer to review and evaluate the Recovery Schedule. Within two (2) calendar days of the conference, the Contractor shall submit the revisions necessitated by the review for the Engineer's review and acceptance. The Contractor shall use the accepted Recovery Schedule as its plan for returning to the Schedule of Record.

D. The Contractor shall confer continuously with the Engineer to assess the effectiveness of the Recovery Schedule. As a result of these conferences, the Engineer will direct the Contractor as follows:

1. If the Engineer determines the Contractor continues behind schedule, the Engineer will direct the Contractor to prepare a Schedule Revision and comply with all of the requirements of a Schedule Revision as stated herein and the other requirements of the Contract Documents; provided, however, that nothing herein shall limit in any way the rights and remedies of the City and Engineer as provided elsewhere in the Contract Documents; or

2. If the Engineer determines the Contractor has successfully complied with provisions of the Recovery Schedule, the Engineer will direct the Contractor to return to the use of the approved Schedule of Record.

1.07 FLOAT TIME

A. Float or slack time shown on the currently approved Schedule of Record is not for exclusive use or benefit of either the City or the Contractor and is available for use by either of them according to whichever first needs the benefit of the float to facilitate the effective use of available resources and to minimize the impact of Project problems, delays, impact, acceleration or changes in the Work which may arise during performance. The Contractor specifically agrees that float time may be used by the City in conjunction with their review activities or to resolve Project problems. The Contractor agrees that there will be no basis for any modification of the milestone or completion dates or an extension of the Contract Time, or a claim for additional compensation as a result of any Project problem, delay, impact, acceleration, or change order which only results in the loss of available float on the currently approved Schedule of Record. Unless otherwise stated herein, float as referenced in these documents, is total float. Total float is the period of time measured by the number of working days each non-critical path activity may be delayed before it and its succeeding activities become part of the critical path. If a non-critical path activity is delayed beyond its float period, that activity then becomes part of the critical path and controls the end date of the project. Thus, the delay of the non-critical path activity beyond its float period will cause delay to the project itself.

B. Float time shown on the Schedule of Record shall not be used arbitrarily by the Contractor in a manner which, in the opinion of the Engineer, unnecessarily delays separate subcontractors from proceeding with their work in a way which is detrimental to the interests of the City. Liability for delay of the project completion date rests with the party actually causing delay to the project completion date. For example, if Party A uses some, but not all of the float time and Party B later uses the remainder of the float time as well as additional time beyond the float time, Party B shall be liable for the costs associated with the time that represents a delay to the project's completion date. Party A would not be responsible for any costs since it did not consume all of the float time and additional float time remained, therefore, the project's completion date was unaffected.

END OF SECTION

SECTION 01320

CONSTRUCTION PHOTOGRAPHY

PART 1 GENERAL

1.01 SCOPE

A. The Contractor shall furnish all labor, equipment and materials required to provide the Owner with digital construction photography of the Project as specified herein.

B. The Contractor shall provide for professional videos and photographs to be made prior to and after construction to provide documentation of conditions and aid in any damage claims assessment. All conditions which might later be subject to disagreement shall be shown in sufficient detail to provide a basis for decisions.

C. Video and photo files shall become the property of the Owner and none of the video or photographs herein shall be published without express permission of the Owner.

1.02 PRE AND POST CONSTRUCTION PHOTOGRAPHY

A. Prior to the beginning of any work, the Contractor shall provide for professional videos and photographs of the work area to record existing conditions.

1. The Contractor shall furnish a complete videotaped record of the pipeline route. The videotape shall include the date of taping and shall contain audio commentary to emphasize existing conditions along the entire route.

2. The route shall be videotaped prior to beginning of construction. The Contractor shall furnish three sets of compact disks containing the videotaped data to the Engineer.

3. The route shall also be videotaped at the completion of construction when directed by the Engineer. The videotape shall show the same areas and features as in the preconstruction videos. The Contractor shall furnish three sets of compact discs containing the videotaped data to the Engineer.

B. The pre-construction videos shall be submitted to the Engineer within 15 calendar days after receipt of construction Notice to Proceed by the Contractor. Post construction videos and photographs shall be provided prior to final acceptance of the project.

1.03 PROGRESS PHOTOGRAPHS

A. Photographs shall be taken to record the general progress of the Project during each pay period. Photographs shall be representative of the primary work being performed at the time.

B. All photographs shall be taken with a digital camera. The photographs shall include the date and time marking in the digital record. All photographs shall be labeled on a tab connected to the bottom of the photo to indicate date and description of work shown.

PART 2 PRODUCTS

2.01 PHOTOGRAPHS

A. Photography and video files shall be provided in CD-ROM format.

B. Photographs shall also be provided in hard copy format. The photographs shall include the date and time marking on the photograph. All photographs shall be labeled on a tab connected to the bottom of the photograph. Tab label shall contain:

1. Project name.

2. Orientation of view.

3. Description of work shown.

C. All compact disks (CDs) furnished under this section shall be suitable for viewing with Windows Media Player.

PART 3 EXECUTION

3.01 SUBMITTALS

A. No construction shall start until pre-construction photography has been completed and accepted by the Engineer.

B. A minimum of ten 8 x10-inch progress photographs shall be submitted with each application for payment. The view selection will be as determined by the Engineer. Photographs shall be submitted in Print File Archival Preservers, 8 1/2 x 11-inch plastic sleeves pre-punched for a 3-ring binder.

C. Construction photographs shall be submitted with each payment request. Failure to include photographs may be cause for rejection of the payment request.

D. The Contractor shall be responsible for all discrepancies not documented in the pre-construction videos and photography.

+ + + END OF SECTION 01320 + + +

SECTION 01350

Project Document Tracking and Control System

PART 1 – GENERAL

1.01 SCOPE

A. The Contractor shall utilize the City of Atlanta's Project Document Tracking and Control System (DTCS). The primary function of the system is to facilitate timely processing and approval of all contract documentation in coordination with the overall Project Schedule established by these Specifications and the Contractor. This system will utilize Skire Unifier for document tracking and control and Lynx Photo Management software. The Skire Unifier software will:

1. Facilitate communication among the Owner, Engineer and Contractor;

2. Facilitate turn-around time with regard to responses and approvals;

3. Provide a central location for all Project information to facilitate all Project participants in performing their tasks based on the latest Project data;

4. Provide a standard system of project administration with accountability.

B. The Contractor shall be required to utilize the web-based DTCS system that resides on the Department of Watershed Management server to generate documents in the proper format for submission to the City. The Contractor shall access the system through the internet using a compatible web browser from the Contractor's administrative field office location, and/or other locations where work associated with the Project is being performed.

C. The Contractor shall be required to generate Project documents and records utilizing the aforementioned system. The Contractor shall be required to transmit and submit the Project documents within the system to the City.

D. The Contractor shall utilize a high capacity scanner capable of scanning 11 x 17 documents, double sided, on site for the entire duration of the Project. All documents must be scanned in and attached to the appropriate Unifier document, including submittals, shop drawings, O&M's and all other documents requested by the Engineer.

E. The Contractor shall utilize the DTCS to create and maintain Project documents, including, but not limited to the following:

1. Company Directory: Addresses, Phone Numbers, Personnel Contacts, etc.

2. Drawings Log: Current Drawing revision log

3. Submittals (Integrated with Project Schedule through Activity codes)

4. Transmittals

5. Requests for Information and Answers (RFIs)

6. Change Documents, Including:

   a. Requests for Proposal (RFPs)

   b. Work Authorizations (WAs)

   c. Change Order Requests (CORs)

   d. Change Orders (CO)

   e. Design Clarifications (DC)

7. Daily Reports (Daily Diaries)

8. Field Decisions & Clarification Memos

9. Notice of Non-Compliance

10. Construction Issue Memos

11. Punchlists

12. Meeting Minutes & Agendas

13. Correspondence

14. Work Plans

15. Start-up Plans

16. Equipment Operation and Maintenance Training

17. Spare Parts

F. The Contractor shall utilize the complete capabilities of the DTCS to meet the requirements of this Section. The Contractor shall provide a highly trained and experienced construction project controls person knowledgeable in construction work sequencing, productivity, scheduling and application of the Skire Unifier software system. This person, along with the Contractor's management team, shall work closely with the City to deliver the documents outlined in this Section

G. Software Support

1. The Contractor is to provide for a one day training class in the base bid for the Lynx PM software for ten personnel, seven for City of Atlanta and three for the Contractor. The type of class to be determined by the City. The Contractor may contact Lynx PM Representative at 1-877-955-7711 as well as Skire Unifier at 1-800-223-1711.

2. The contractor shall purchase five (10) additional licenses of the Skire Unifier software on behalf of the City for use during the project. At project close, the licenses will remain City property.

3. The Contractor shall be required to establish an internet connection using DSL or better to connect to the DTCS to permit the forwarding and receipt of documents.

   a. The Skire Unifier software supports the following Email programs, and the Contractor is to utilize:

      (1) Microsoft Outlook 2003

      (2) Microsoft Outlook 2007

   b. The Contractor shall also provide 2 days of consulting services in the base bid for troubleshooting and maintenance of the DTCS at any location designated by the City or at the Contractor's administrative field office (if authorized by the City). Troubleshooting, maintenance, upgrade, configuration, and set up shall be performed by Skire or their authorized representative based on a scope pre-defined by the City of Atlanta. The Contractor shall

utilize the custom data fields, dictionaries, and coding systems as required by the City of Atlanta.

H. The Contractor shall be required to attend a 2-day training session on the operation of the City's DTCS, provided by a Skire Authorized Trainer. The Contractor shall provide the training session for ten participants (fee for the Skire Authorized Trainer). The training session shall be attended by the Contractor (limited to three participants) as well as representatives of the Owner (seven participants). The Contractor shall be responsible for the cost of training for additional members of their firm or future retraining, as may be deemed necessary by the Contractor.

I. The Contractor shall meet with the City within 15 days after the Contract is awarded to discuss access requirements and the Contractor's plan to utilize DTCS and execute the document control functions herein.

J. Access through the internet to the DTCS shall be operational within 30 days following the pre-construction meeting date. This must be operational from the contractor's administrative field office location.

1.02 COMPANY DIRECTORY

A. The Contractor and the City will monitor and manage the Company Directory. The directory must include Company name, Company abbreviation, contact names, address, phone numbers and e-mail addresses.

1.03 DRAWING LOG

A. The City will maintain a log of initial "issued for construction" drawings in the DTCS. Information shall include drawing number, title and revision number. In addition to logging the initial project drawing list, the City will maintain a log on the DTCS of all subsequent revisions to these drawings and any sketches resulting from clarification memos, RFIs, field orders and Change Orders. It is the Contractor's responsibility to utilize the latest drawings and sketches in the performance of the work.

1.04 SUBMITTALS/SHOP DRAWINGS

A. Requirements: This section specifies supplemental requirements to GC-28, related to the processing of submittals and shop drawings. The Contractor will utilize the DTCS to log and track submittals, as well as generate associated transmittal letters.

B. Submittals & Product Data: A list of all required submittals will be entered into the DTCS by the Contractor. Submittals shall be incorporated into

packages, with the submittal numbering format to be provided by the COA's engineer. The Contractor will log and track all submittals utilizing the DTCS. Each review cycle shall be entered into the DTCS. The Contractor shall identify as activities in the CPM schedule, specified in SC-16, to include all data submittals, as well as those involving complex reviews and long lead deliveries, and all procurement items required for construction activities Submittal schedule information shall be updated monthly with the Contractor's updated project CPM schedule, as specified in SC-16.

C. Samples: A list of all required sample submittals will be entered into the DTCS by the Contractor. Sample submittals shall be identified as individual submittals within the submittal packages with numbering as specified above.

D. Guarantees/Warranties: A list of all required Guarantee/Warranty submittals will be entered into the DTCS by the Contractor. These submittals shall be identified as individual submittals within the submittal packages with numbering as specified above.

E. Work Plans, Start-up Plans, O&M Submittals and Spare Parts: All testing, Start-up and O&M submittals will be entered into the DTCS by the Contractor. These submittals shall be identified as individual submittals within the submittal packages identified with numbering as specified above.

F. Submittal Procedures: The Contractor shall prepare all submittal packages utilizing the submittal numbering system, description and packaging conventions described above. Submittals prepared by the Contractor, which fail to follow the conventions described above, will be returned "amend and resubmit". Should the Contractor determine that a submittal is required and is not covered by the listing within the DTCS, consultation with the City to determine the submittal number, description and packaging will be required.

1.05 CORRESPONDENCE

A. The City shall monitor and manage the correspondence, Non-Compliance Notices, Field Decisions & Clarification Memos and Construction Issue Memo logs. The Contractor is responsible for generating Project correspondence within the DTCS, and forwarding the correspondence to the City.

1.06 TRANSMITTAL LOG

A. The Contractor and the City will monitor and manage the transmittal log.

All Project transmittals shall be created electronically, automatically sequentially numbered and logged into the DTCS system as they are created. The Contractor is responsible for utilizing the system to create transmittals for items transmitted to the Owner, Engineer, Resident Inspection Staff and other Contractors.

1.07 REQUEST FOR INFORMATION & ANSWERS

A. The Contractor shall be responsible for generating RFIs on the DTCS system. The Contractor shall notify the City when an RFI is submitted. The City will monitor and manage the RFI log. The City will generate an Answer document in response to each RFI and forward them to the Contractor. The DTCS will track “Ball in Court” for all RFIs and Answers, as well as date of original generation and response date. In addition the RFIs will reference the relative Specification Section and Drawings. The DTCS will identify the date of the request and the originator, responsible party for a response and the date of the response.

1.08 CHANGE DOCUMENTS

A. Change documents include Request for Proposals (RFPs), Work Authorization Requests (WARs), Work Authorizations (WAs), Change Orders Requests(CORs), Design Clarifications (DCs), and Change Orders (COs). All change documents will be monitored and managed by the City utilizing the DTCS. The DTCS will track “Ball in Court” status of all change documents.

1.09 DAILY REPORTS

A. The Contractor is responsible for creating daily reports (daily diaries) utilizing the DTCS. The Contractor is required to enter the Daily Reports into the DTCS by 10:00 a.m. of the subsequent day that the Contractor or any subcontractor performs work. All daily reports shall be logged into the DTCS by the Contractor. The Contractor shall also provide one signed hard copy of all daily reports on a weekly basis. Required information shall include Contractor, Date, Day, Temperature, Precipitation, Sky, Wind, Work Activity, Equipment, Field Force, Visitors, Materials, and Scheduled Activities utilizing the Primavera schedule activity codes. Daily reports which fail to link work activities to the active Primavera schedule will not be acceptable.

1.10 PUNCHLISTS

A. The City will monitor and manage Punchlists, and will create Punchlists to be forwarded to the Contractor. The Contractor shall address the punchlist items that have been assigned to the Contractor and forward updates to the

City. Once accepted as complete, the City will access the punchlist in the DTCS and close it out.

1.11 MEETING MINUTES AND AGENDA

A. The City shall monitor and manage the meeting minute process. The City will forward meeting minutes to the Contractor electronically. The City will log the meeting minute items into the DTCS within 3 days of the meeting date.

1.12 PROGRESS PAYMENTS /REQUISITIONS FOR PAYMENT

A. The contractor should reconcile units to be billed on a daily basis with the City's Site Inspector.

B. The contractor shall prepare a Turn-around Document (TAD) prior to Submission of Final Progress Payment application and review it with the City's Project Manager to reconcile all units to be billed for the period.

C. The contractor shall, once the TAD has been approved, create the progress pay application from the Skire from the Skire Unifier software and then forward it to the City electronically along with hard copies by 4:00 p.m. by the end of the update/billing period.

1.13 LYNX PHOTO MANAGEMENT SOFTWARE

A. The Lynx PM software shall be utilized by the City and the Contractor for the duration of the project. The daily construction photographs will be the permanent visual record of the pre-construction conditions, daily construction site activities, and the completion of construction work. The Contractor must submit to the City no less than four record photos for each activity ID listed in the project schedule per the last schedule update. Applicable photos must accompany each Pay Application.

+++ END OF SECTION 01350 +++

[This page intentionally left blank]

SECTION 01351

PUBLIC RELATIONS AND COMMUNICATIONS

PART 1 GENERAL

1.01 SCOPE

A. The Contractor shall provide all labor, materials, equipment and incidentals required to meet the requirements and responsibilities related to public relations and communications as specified herein during performance of the Work.

1.02 STAFFING

A. The Contractor shall employ one (1) full time Public Information Officer (PIO) whose specific duties and job shall be to perform customer service related functions and to continuously coordinate and provide information and services as required by the City's Office of Public Relations and Communications and other City staff as necessary.

1. PIO must have been employed on at least one (1) satisfactorily completed water line construction project and/or at least one (1) satisfactorily completed sanitary sewer construction project.

2. PIO must have had the responsibilities of receiving, logging, tracking, responding and resolving customer/citizen complaints and claims, providing notices to and personal interaction with affected customers/citizens regarding project impact and projected work schedules of the Contractor, reviewing project schedules and "look-ahead" to determine projected areas of impact from the Work.

3. PIO must have a minimum of one (1) year of experience in performing this type of work on similar projects.

B. The City shall provide a Public Information Manager (PIM) whose specific duties and job shall be to perform customer service related functions and to continuously coordinate and provide information and services as required by the City's Office of Public Relations and Communications and other City staff as necessary.

PART 2 PRODUCTS

(NOT USED)

PART 3 EXECUTION

3.01 PUBLIC INFORMATION KICK-OFF MEETING

A. Prior to commencement of Work and following the preconstruction conference, the Contractor, PIO and the Engineer shall attend a public information meeting hosted by City Council members whose districts will be impacted by construction and the Office of Public Relations and Communications. At this meeting the following items will be discussed:

1. Contractor's responsibilities

2. Contractor's relationship with the City's Office of Public Relations and Communications and the Engineer

3. Functions and responsibilities of the Public Information Officer (PIO) employed by the Contractor as required under paragraph 1.02 above. The Contractor's PIO and backup individual shall be identified to the Customer Care Call Center with 24/7 PIO contact telephone numbers provided.

3.02 RESPONSIBILITIES OF THE PUBLIC INFORMATION OFFICER

A. Responsibilities of the Public Information Officer (PIO) shall include, but not be limited to, the following elements:

1. Receiving, logging, tracking and resolving customer/citizen complaints and claims; either received directly, by the City or the Engineer and providing periodic updates and reports as specified.

2. Providing notice to affected customers/citizens in the event there are scheduled service outages or other work elements required for the performance of Work that are scheduled which will have an impact on the neighborhood or property owners.

3. Attendance and participation in scheduled project progress meetings for discussion, updates and resolution to customer/citizen complaints, claims, review of schedules and other matters as required.

4. In the event Work is required on private property where an easement has been acquired, the PIO shall notify the property owner at least fourteen (14) days in advance of commencement of the Work in writing.

5. Prior to commencement of work in any neighborhood, the PIO shall provide notice to the customers/citizens thirty (30) days in advance. In addition, twenty-four (24) hours prior to actual commencement of the work, the PIO shall notify the customers/citizens via door or mailbox hanger as hereinafter provided for in this Section.

6. The PIO shall be on twenty-four (24) hour call, seven (7) days a week and be equipped with a mobile phone. In the event of the PIO being unavailable, the Contractor shall designate a second individual to handle the responsibilities and functions who shall be fully familiar and aware of the duties and prosecution of the work

7. The Contractor/PIO must report all complaints to the Customer Care Call Center (404-658-6500) and to the City's PIO within six (6) hours of receipt. Conversely, all calls received by the Customer Care Call center will be transmitted to the City's PIO within forty-eight (48) hours of receipt and the PIO must perform follow-up within twenty-four (24) hours with resolution after receipt of the notice. Upon receipt of the information the Customer Care Call Center will create a file to document the incident.

8. The PIO shall assist the Contractor's Traffic Control Officer in coordination of all street closures, detours and traffic pattern changes with the Public Involvement Officer and the Department of Public Works and the GDOT. As required above, the PIO must provide notice to the affected areas in advance of the scheduled closures, detours and traffic pattern changes.

9. In the event there is an emergency involving the public or a situation where media inquiries and responses are possible, the PIO shall be notified immediately. The PIM will then coordinate with the City's Media Relations Manager for appropriate action. **Under no circumstance shall any employee, Subcontractor or vendor of the Contractor make any comments to the media regarding the project at any time.**

3.03 CUSTOMER SERVICE TRACKING SOFTWARE

A. The Contractor shall use the City's Document Tracking and Control System (DTCS), as specified in Section 01350, to track and enter information from customers/citizens regarding complaints, claims and inquiries. All related information shall be updated on a daily basis by the PIO. Tracking information and responses shall be coordinated with the PIM.

B. Reports shall be provided as weekly updates on all activities and on specific cases within twenty-four (24) hours when requested.

C. Information recorded shall include but not be limited to the following:

1. Date complaint/claim/inquiry received.

2. Name, address and telephone number of individual filing complaint/claim/inquiry.

3. Nature of complaint/claim/inquiry.

4. Address where problem is located if different than above.

5. Action required, date, action taken, date action completed.

6. Follow-up with person who filed under 2 above to verify satisfaction or status.

7. Documents associated with actions taken.

8. Any information regarding resolution with the Contractor's, Subcontractor's or vendor's insurance company shall be fully documented.

3.04 IDENTIFICATION BADGES AND SECURITY

A. All members of the Contractor's staff and his subcontractor's permanent staff at or above the level of foreman who will be working on-site will be issued an ID badge by the City. The ID badge will list the worker's name and company affiliation and will include a picture. All members will go to the Office of Safety & Security to have their ID's made.

B. It shall be the Contractor's responsibility to collect the ID badges from any employee who is discharged or resigns prior to completion of the project as well as at completion of the project so that all ID badges are returned to the Office of Security and Safety. The Contractor will be charged a fee of $25.00 per badge for any badge not returned at completion of the project. For any ID badges lost during the term of the project that must be reissued, there will be a charge of $15.00 per ID badge. The Contractor shall deduct these charges from his periodic or closeout payment request or the City will deduct.

C. Since lower level personnel of the Contractor, Subcontractor or vendor will not be issued ID badges, the Contractor must maintain a daily sign-in sheet for daily workers under his supervision. The Contractor must be able to identify any employee on the site as a bona fide worker if asked and if not able to identify, the Engineer will direct the Contractor to remove the individual from the site

D. The Contractor shall develop a security plan for use on the job site during construction. The plan shall include, as a minimum, the use of pre-employment background checks and drug tests, crime prevention and anti-theft procedures, workplace violence and care of project documents. All staff working on the site shall be familiar with the requirements of the Security Plan.

E. City ordinances prohibit the carrying of weapons on City streets. Any person bringing weapons to the jobsite shall be removed immediately.

F. All of the Contractor's staff at or above the level of foreman shall attend a 4-hour mandatory Security Training session conducted by the Office of Security and Safety. Multiple training sessions will be offered and staff must complete the training at least within 1 month of commencing work on the jobsite. All costs associated with the training will be considered as incidental to the Contract.

G. Persons on the jobsite shall report any suspicious activity by workers or by others at the jobsite area first to the Atlanta Police Department by calling 911 and then immediately to the Director of Security and Safety.

3.05 DOORHANGERS

A. The Contractor shall produce door hangers required for notice to customers/citizens and residents from the template provided by the PIM (SEE EXAMPLE AT END OF THIS SECTION) as specified hereinabove in paragraph 3.02. Door hangers shall be utilized for notification in the event of, but not limited to, the following events:

1. Planned service disruption/outages
2. Road closures/detours/traffic pattern changes
3. Access/entrance to property
4. Work start-up
5. Blasting

3.06 IMPACTED AREA ADDRESS DATABASE

A. The Contractor shall provide the Office of Communications and Public Outreach with a database of addresses and phone numbers (and names if available) of all project impacted residences, businesses and facilities at least three (3) weeks prior to project start-up. The database will be used by the PIM for regular citizen communications and notifications.

B. The Contractor and Engineer shall copy the PIM on all correspondence and Right of Entry Agreements with citizens and property owners.

3.07 SCHEDULE

A. The PIO and PIM shall be provided a copy of the detailed CPM project construction schedule following approval by the Engineer. The PIO will provide notification to the impacted area at least two (2) weeks prior to project start-up.

B. The Contractor shall inform the PIM through the weekly progress meetings of any project schedule changes or changes in "disruptive work" such as blasting, road

closures, etc., that would have significant impact on citizens or require prior citizen notification.

3.08 MEDIA RELATIONS AND JOB SITE INQUIRIES

A. As specified above in paragraph 3.02, only authorized persons shall release any information to media inquiries. The Contractor's field personnel shall at all times have project information cards available that will be provided to media and citizens if inquiries are made on-site. All inquiries shall be directed to the person referred to on the card and citizens shall be referred to the PIO and/or PIM.

B. Project information cards shall be produced by the Contractor from the template provided by the PIM. (SEE EXAMPLE AT END OF THIS SECTION)

3.09 TRAINING

A. All of the Contractor's staff at or below the level of superintendent shall attend a mandatory Public Relations Training and Protocol Procedures Training. The purpose of this training is to teach construction crews on how to deal with citizens, the media, etc. and how to conduct themselves on the jobsite. This training is approximately one (1) hour in length and will be facilitated by City staff at a designated City facility. Training will be provided at no cost to the Contractor.

3.10 VEHICLE SIGNS AND PROJECT SITE SIGNAGE

A. The Contractor shall place pre-approved magnetic signs on all job-site project vehicles. The signage template will be provided by the PIM with the signs to be produced by the Contractor.

B. All project sites shall have pre-approved project signs in accordance with the template provided by the PIM and signs produced by the Contractor. Some of the signs shall be mounted on moveable skids so they can be relocated as the project progresses on various streets in project area.

3.11 NOTIFICATIONS

A. The Contractor shall provide the following notifications as required by the PIM:

1. Anticipated work start date must be three (3) weeks prior so PIM may send out two (2) week notice mailer.

2. Service disruptions - notify PIM and Call Center at least 72 hours in advance so that 48 hour notice may be issued; notice to citizens via door hangers and/or automated phone message 24 hours prior to disruption.

3. Street Closure or Partial Closure - notify PIM and Call Center at least 72 hours in advance to permit 48 hour automated phone message; notify fire, police other emergency services and other authorities 24 hours prior to street closure.

4. Significant work in neighborhood- blasting, directional drilling, trenchless installation, open cut, etc.-door hangers or automated phone messages are required-notify the PIM and Call Center at least 72 hours in advance to permit 48 hour automated phone message; notification to citizens via door hangers and/or automated phone messages 24 hours in advance.

B. The Contractor shall be fully responsible for notification to all emergency related services for detours, closures (partial or full) or traffic pattern changes and as such they must be detailed in their traffic control plan and implemented through the Contractor's Traffic Control Manager and per all permitting requirements. Refer to Section 01550, Traffic Regulation.

C. The Contractor shall be fully responsible for distributing all notifications a minimum of 48 hours in advance of service outages for schools, nursing homes hospitals, medical clinics, assisted living facilities or other types of facilities and shall also make personal contact with facility representatives no later than 60 minutes prior to the outage.

D. The Contractor shall at all times coordinate with the PIM and Call Center to provide detailed schedules and street locations for service disruptions or street closures to ensure that Call Center is well equipped to provide adequate response to citizen inquiries.

+ + + END OF SECTION 01351 + + +

Sample Door Hanger

NOTICE OF SEWER SYSTEM IMPROVEMENT WORK

City of Atlanta
Department of Watershed Management

The City is pleased to announce that we are moving forward with plans to fix our sewer system to meet state and federal requirements.

We are now at the point where construction activities are about to begin on your street for the South River Capacity Relief Projects. These planned improvements will reduce the incidents of sewage backups, leaks and sanitary sewer overflows.

The particular work planned for your street is checked below.

- o OPEN-CUT CONSTRUCTION
- o TUNNELING
- o SMOKE TESTING
- o ROAD CLOSURES AND/OR DETOURS
- o OTHER _____

We will do our best to minimize any inconvenience to you. All personnel are required to wear Clean Water Atlanta identification badges. If you have any questions or concerns, please contact William Horton, the Public Information Manager for this project at 770-294-3240 or call the Clean Water Atlanta Help Line at 404-529-9211.

If you have any questions, please call the Department of Watershed Management Helpline at 404-529-9211.

Sample Project Information Card (Tri-Fold)

City will enter into an easement agreement with the owner. The City's real estate agents are currently negotiating access agreements with the affected property owners.

Sewer separation contractors may use different technologies to construct the new sewers; including open-cut and tunnel construction. Neighborhoods in the separation area will experience some disruption, such as partial or complete street closures, traffic rerouting, storage of materials and equipment near construction sites, brief interruptions in sewer service, dust and noise. The City will take every practical measure to reduce disruption during the sewer separation projects.

If you have any concerns about work in your area or would like additional information, you contact the Project Help Line at 404-529-9211 or visit the City's Public Information Office located at 290 M.L.K. Blvd., Suite 103. The office is open from 8:00 am to 5:00 pm, Monday through Friday.

City of Atlanta
Shirley Franklin
Mayor

City Council
Lisa Borders
President

Carla Smith
Kwanza Hall
Ivory Young
Cleta Winslow
Natalyn Archibong
Anne Fauver
Howard Shook
Clair Muller
Felicia Moore
C.T. Martin
Jim Maddox
Joyce Sheperd
Ceasar Mitchell
Mary Norwood
H. Lamar Willis

CLEAN WATER ATLANTA

Stockade Project Information Card

COMBINED SEWER OVERFLOW REMEDIATION PROGRAM

The federal Environmental Protection Agency and state Environmental Protection Division have approved the City's plan to eliminate water quality violations from combined sewer overflows (CSOs). This plan includes a combination of deep-rock storage tunnels, new treatment facilities and the separation of combined sewers in selected basins- Greensferry, McDaniel and the Stockade sub-basin portion of the Intrenchment Creek basin.

You live in the Stockade Basin. Work in this basin extends roughly as far south as Lester Avenue, as far east as Stovall Street (north of I-20) or Ormewood Terrace (South of I-20), as far north as Decatur Street and as far west as Boulevard. Sewer separation construction activities commenced on May 1, 2006 and are slated for completion by December 2007.

WHAT HOMEOWNERS MIGHT EXPERIENCE DURING SEWER SEPARATION

Most of the homes and businesses in the Greensferry, McDaniel and Stockade areas are connected to a combined sewer system. The combined system will be converted to a separated sewer system under the federal consent decree program. Sewer separation involves constructing new sanitary or storm sewers within a combined sewer service area. This allows wastewater and stormwater, currently collected in the same pipe, to be collected in separate pipes. The wastewater would be carried to an existing treatment plant where pollutants are removed before discharge to the South River. Separately treated stormwater would be collected and discharged to a local stream.

The Department of Watershed Management has been working with elected officials and community leaders to keep affected residents and business owners update about this project and to address specific neighborhood concerns.

Most of the existing combined sewers run beneath city streets but some were constructed in areas that are now private property. If a sewer is on private property and there is no existing easement, the

EXISTING COMBINED SEWER SYSTEM

Dry Weather *When It Rains*

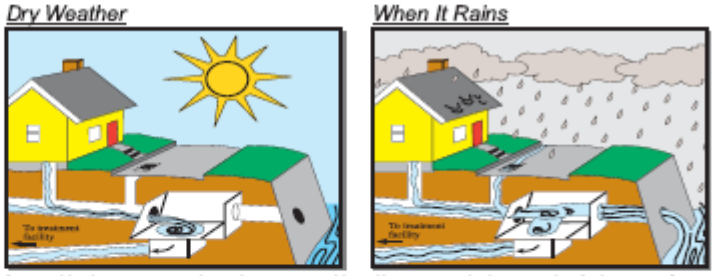

In a combined sewer system, domestic sewage combine with stormwater in the same pipe. In the event of heavy rains, the stormwater can cause an overflow into a receiving stream.

AFTER SEPARATION

Dry Weather *When It Rains*

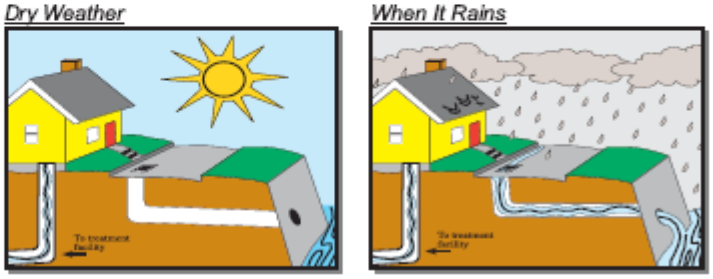

In a separate sewer system, domestic sewage and stormwater flow into separate pipes. The sewage is diverted to a wastewater treatment plant and storm water is released untreated to a receiving stream.

Sample Door Hanger
(Two-Sided)

Date: _____

Dear Water Customer:

Because of maintenance/repairs to the water system in your community, your service will be briefly interrupted on:

Date: _____

Time: _____

Your service will be restored at approximately:

_____

We apologize for the inconvenience and assure you that our efforts will help ensure clean, safe water for Atlantans and our downstream neighbors for generations to come.

Thank you for your understanding.

Please call 404-658-7220 if you have concerns or questions regarding this work.

_____
Watershed Management Representative

City of Atlanta
Department of Watershed Management
55 Trinity Avenue, S.W., Suite 5400
Atlanta, GA 30303

Date: _____

Dear Water Customer:

Because of maintenance/repairs to the water system in your community, your service will be briefly interrupted on:

Date: _____

Time: _____

Your service will be restored at approximately:

_____

We apologize for the inconvenience and assure you that our efforts will help ensure clean, safe water for Atlantans and our downstream neighbors for generations to come.

Thank you for your understanding.

Please call 404-658-7220 if you have concerns or questions regarding this work.

_____
Watershed Management Representative

City of Atlanta
Department of Watershed Management
55 Trinity Avenue, S.W., Suite 5400
Atlanta, GA 30303

SECTION 01400

QUALITY ASSURANCE/QUALITY CONTROL

PART 1 GENERAL

1.01 SCOPE

A. This section includes requirements for the implementation of the Contractor's quality assurance and quality control program.

1.02 SITE INVESTIGATION AND CONTROL

A. Contractor shall check and verify all dimensions and conditions in the field continuously during construction. Contractor shall be solely responsible for any inaccuracies built into the Work due to Contractor's and subcontractor's failure to comply with this requirement.

B. Contractor shall inspect related and appurtenant Work and report in writing to the Engineer any conditions that will prevent proper completion of the Work. Failure to report any such conditions shall constitute acceptance of all Site conditions, and any required removal, repair, or replacement caused by unsuitable conditions shall be performed by the Contractor solely and entirely at Contractor's expense.

1.03 INSPECTION OF THE WORK

A. All work performed by the Contractor and subcontractors shall be inspected by the Contractor and non-conforming Work and any safety hazards in the work area shall be noted and promptly corrected. The Contractor is responsible for the Work to be performed safely and in conformance to the Contract Documents.

B. The Work shall be conducted under the general observation of the Engineer and is subject to inspection by the City of Atlanta or representatives of the City acting on their behalf to ensure strict compliance with the requirements of the Contract Documents. Such inspection may include mill, plant, shop, or field inspection, as required. The Engineer or any inspector(s) shall be permitted access to all parts of the Work, including plants where materials or equipment are manufactured or fabricated.

C. The presence of the Engineer, or any inspector(s), however, shall not relieve the Contractor of the responsibility for the proper execution of the Work in accordance with all requirements of the Contract Documents. Compliance is the responsibility of the Contractor. No act or omission on the part of the Engineer, or any inspector(s) shall be construed as relieving Contractor of this responsibility.

Inspection of Work later determined to be non-conforming shall not be cause or excuse for acceptance of the non-conforming Work. The City may accept non-conforming Work when adequate compensation is offered and it is in the City's best interest as determined by the City.

D. All materials and articles furnished by the Contractor or subcontractors shall be subject to rigid documented inspection, by qualified personnel, and no materials or articles shall be used in the Work until they have been inspected and accepted by the Contractor's Quality Control representative and the Engineer or other designated representative. No Work shall be backfilled, buried, cast in concrete, covered, or otherwise hidden until it has been inspected. Any Work covered in the absence of inspection shall be subject to uncovering. Where uninspected Work cannot be easily uncovered, such as in concrete cast over reinforcing steel, all such Work shall be subject to demolition, removal, and reconstruction under proper inspection at the Contractor's expense.

E. All materials, equipment and/or articles furnished to the Contractor by the City shall be subject to rigid inspection by the Contractor's Quality Control representative before being used or placed by the Contractor. The Contractor shall inform the Engineer, in writing, of the results of said inspections within one working day after completion of inspection. In the event the Contractor believes any material or articles provided by the City to be of insufficient quality for use in the Work, the Contractor shall immediately notify the Engineer.

1.04 TIME OF INSPECTION AND TESTS

A. Samples and test specimens required under these Specifications shall be furnished and prepared for testing in ample time for the completion of the necessary tests and analyses before said articles or materials are to be used. The Contractor shall furnish and prepare all required test specimens at Contractor's own expense.

B. Whenever the Contractor is ready to backfill, bury, cast in concrete, hide, or otherwise cover any Work under this Contract, the Engineer shall be notified not less than three work days in advance to request inspection before beginning any such Work of covering. Failure of the Contractor to notify the Engineer at least three work days in advance of any such inspections shall be reasonable cause for the Engineer to order a sufficient delay in the Contractor's schedule to allow time for such inspection. The costs of any remedial or corrective work required, and all costs of such delays, including its impact on other portions of the Work, shall be borne by the Contractor.

1.05 SAMPLING AND TESTING

A. The Contractor shall retain and pay for an independent materials testing agency approved by the Engineer and the City of Atlanta as required by the General

Conditions. This independent testing agency will develop and submit a testing plan for quality assurance on each type of work activity. The testing agency will document the processes and procedures utilized to verify and maintain quality work. When not otherwise specified, all sampling and testing shall be in accordance with the methods prescribed in the most current standards, as applicable to the class and nature of the article or materials considered. However, the Engineer reserves the right to use any generally accepted system of inspection which, in the opinion of the Engineer, will ensure the Engineer that the quality of the workmanship is in full accord with the Contract Documents.

B. The City reserves the right to abbreviate, modify the frequency of or waive tests or quality assurance measures, but waiver of any specific testing or other quality assurance measure, whether or not such waiver is accompanied by a guarantee of substantial performance as a relief from the specified testing or other quality assurance requirements as originally specified, and whether or not such guarantee is accompanied by a performance bond to assure execution of any necessary corrective or remedial work, shall not be construed as a waiver of any technical or qualitative requirements of the Contract Documents.

C. Notwithstanding the existence of such waiver, the City shall reserve the right to make independent investigations and tests as specified in the following paragraph and failure of any portion of the Work to meet any of the qualitative requirements of the Contract Documents, shall be reasonable cause for the City to require the removal or correction and reconstruction of any such Work.

D. In addition to any other inspection or quality assurance provisions that may be specified, the City shall have the right to independently select, test, and analyze, at the expense of the City, additional test specimens of any or all of the materials to be used. Results of such tests and analyses shall be considered along with the tests or analyses made by the Contractor to determine compliance with the applicable specifications for the materials so tested or analyzed provided that wherever any portion of the Work is discovered, as a result of such independent testing or investigation by the Engineer, which fails to meet the requirements of the Contract Documents, all costs of such independent inspection and investigation and all costs of removal, correction, reconstruction, or repair of any such Work shall be borne by the Contractor.

1.06 CONTRACTOR'S QUALITY ASSURANCE/QUALITY CONTROL REQUIREMENTS

A. The Contractor shall establish and execute a Quality Assurance/Quality Control (QA/QC) program for the services that are being procured from the Contractor. The program shall provide the Contractor with adequate measures for verification and conformance to defined requirements by the Contractor's personnel and subcontractors (including fabricators and suppliers). This program shall be described in a Plan responsive to this Section. It shall utilize the services of an

independent testing agency/company that is industry certified to provide quality assurance and compliance with the standards specified.

B. The Contractor shall furnish the Engineer a project specific QA/QC Plan. The Plan shall contain a comprehensive account of Contractor's QA/QC procedures as applicable to this job. The Contractor shall furnish for review by the Engineer, no later than 14 days after receipt of notice to proceed, the QA/QC plan proposed to be implemented. The plan shall identify personnel, procedures, control, instructions, tests, records, and forms to be used. Construction will be permitted to begin only after acceptance of the QA/QC Plan. The detailed requirements for this Plan are delineated in the following paragraphs. No payments will be made to the Contractor until the QA/QC Plan is fully accepted by the Engineer.

C. The QA/QC Plan shall describe and define the personnel requirements described herein. The Contractor shall employ a full time on-site QA/QC Manager to manage, address and resolve all quality control issues.

1. The QA/QC Manager shall be as identified by the Contractor and approved by the City. The QA/QC Manager shall have a minimum of five (5) years of construction experience in pipe line installation. The QA/QC Manager shall be onsite at all times while work is being performed by the contractor, to remedy and demonstrate that work is being performed properly and to make multiple observations of all Work in progress. This individual shall be dedicated solely to QA/QC activities and shall have no supervisory or managerial responsibility over the work force. The QA/QC Manager shall not be assigned any other duties or roles by the Contractor.

2. The Contractor shall provide additional personnel who are assigned to assist the QA/QC Manager as required to fulfill the requirements of the QA/QC Plan. The Contractor shall provide a copy of the letter to the QA/QC Manager signed by an authorized official of the firm which describes the responsibilities and delegates sufficient authorities to adequately perform the functions of the QA/QC Manager, including authority to stop work which is not in compliance with the contract. The QA/QC Manager shall issue letters of direction to all other various quality control representatives outlining duties, authorities, and responsibilities. Copies of these letters shall also be furnished to the Engineer.

D. The Contractor’s QA/QC program shall ensure the achievement of adequate quality throughout all applicable areas of the Project. A customized QA/QC Plan shall be developed that discusses each type of work that the Contractor is responsible for within the Project. The QA/QC Plan shall describe the program and include procedures, work instructions and records and a description of the quality control organization.

1. The description of the quality control organization shall include a chart showing lines of authority staffing plan and acknowledgment that the QA/QC staff shall implement the system for all aspects of the work specified. The staffing plan shall identify the name, qualifications (in resume format), duties, responsibilities, and authorities of each person assigned a QA/QC function including the QA/QC Manager.

2. In addition, the Plan shall describe methods relating to areas that require special testing and procedures as noted in the specifications.

E. Identification and Control of Items and Materials: Procedures to ensure that items or materials that have been accepted at the site are properly used and installed shall be described in the QA/QC Plan.

F. The procedures shall provide for proper identification and storage, and prevent the use of incorrect or defective materials.

G. Inspection and Tests: The Contractor shall have written procedures defining a program for control of inspections performed and these procedures shall be described in the QA/QC Plan.

1. Inspections and tests shall be performed and documented by qualified individuals. At a minimum, "qualified" shall mean having performed similar QA/QC functions on similar type projects for a minimum of five (5) years and possession of industry standards certification and license. Records of personnel experience, training and qualifications shall be submitted to the Engineer for review and approval.

2. The Contractor shall maintain and provide to the Engineer, within two working days of completion of each inspection and test, adequate records of all such inspections and tests. Inspection and test results shall be documented and evaluated to ensure that requirements have been satisfied.

3. Procedures shall include:

   a. Specific instructions defining procedures for observing all Work in process and comparing this Work with the Contract requirements (organized by specification section).
   b. Maintaining and providing daily QA/QC inspection reports. Such reports shall, at a minimum, include the following:
      i. Dated list of Item(s) inspected
      ii. Location of the test sample(s)
      iii. Logs, detailed locational drawings and confirmation reports
      iv. Quality characteristics in compliance
      v. Quality characteristics not in compliance
      vi. Corrective/remedial actions taken

vii. Statement of certification
viii. QC Manager's signature

c. Specific instructions for recording all observations and requirements for demonstrating through the reports that the Work observed was in compliance or a deficiency was noted and action to be taken.
d. Procedures to preclude the covering of deficient or rejected Work.
e. Procedures for halting or rejecting Work.
f. Procedures for resolution of differences between the QA/QC representative(s) and the production representative(s).
g. Method of documenting QA/QC process and results including:
   i. Automatic exception reporting
   ii. Resolution tracking
   iii. Quality Confirmation Test reports
   iv. Sample retention index and storage

4. The QA/QC Plan shall identify all contractual hold/inspection points as well as any Contractor imposed hold/inspections points.

5. The QA/QC Plan shall include procedures to provide verification and control of all testing provided by the Contractor including:

   a. Individual test records containing the following information:
      i. Item tested –item number and description
      ii. Test results
      iii. Test designation
      iv. Test work sheet including location sample was obtained
      v. Acceptance or rejection
      vi. Date sample was obtained
      vii. Retest information, if applicable
      viii. Control requirements
      ix. Tester signature
      x. Testing QC staff initials
   b. Maintaining and providing to the Engineer daily testing records. Such records shall, at a minimum, contain the following:
      i. Dated list of Item(s) inspected
      ii. Location of the test sample(s)
      iii. Logs, detailed location drawings and confirmation reports
      iv. Quality characteristics in compliance
      v. Quality characteristics not in compliance
      vi. Corrective/remedial actions taken
      vii. Statement of certification
   c. QC Manager's signature providing for location maps/drawings (i.e. lift drawings, laying schedules, etc.) for all tests performed or location of Work covered by the tests.
   d. Maintaining copies of all test results.
   e. Ensuring Engineer receives independent copy of all tests.

f. Ensuring testing lab(s) are functioning independently and in accordance with the specifications.
g. Ensuring re-tests are properly taken and documented.

H. Control of Measuring and Test Equipment: Measuring and/or testing instruments shall be adequately maintained, calibrated, certified and adjusted to maintain accuracy within prescribed limits. Calibration shall be performed at specified periods against valid standards traceable to nationally recognized standards and documented.

I. Supplier Quality Assurance: The QA/QC Plan shall include procedures to ensure that procured products and services conform to the requirements of the Specifications. Requirements of these procedures shall be applied, as appropriate, to subcontractors and suppliers. QA/QC inspections and certifications shall not be deferred to the Contractor's subcontractors or suppliers.

J. Deficient, Defective and Non-conforming Work and Corrective Action

1. The QA/QC Plan shall include procedures for handling of deficiencies and non-conformances. Deficiencies and non-conformances are defined as documentation, drawings, material, and equipment or Work not conforming to the specified requirements or procedures. The procedures shall prevent non-conformances by identification, documentation, evaluation, separation, disposition and corrective action to prevent recurrence. Conditions having adverse effects on quality shall be promptly identified and reported to the senior level management. The cause of conditions adverse to quality shall be determined and documented and measures implemented to prevent recurrence. In addition, at a minimum, this procedure shall address:

a. Personnel responsible for identifying deficient and non-complying items within the work.
b. How and by whom deficient and non-compliant items are documented "in the field".
c. The personnel and process utilized for logging deficient and non-compliant work at the end of each day onto a Deficiency Log.
d. Tracking processes and tracking documentation for Deficient and Non-Compliant items.
e. Personnel responsible for achieving resolution of outstanding deficiencies.
f. Once resolved, how are the resolutions documented and by whom.

K. Special Processes And Personnel Qualifications

1. The QA/QC Plan shall include detailed procedures for the performance and control of special process (e.g. welding, soldering, heat treating, cleaning, plating, nondestructive examination, etc.).

2. Personnel performing special process tasks shall have the experience, training and certifications commensurate with the scope, complexity, or nature of the activity. They shall be approved by the Engineer before the start of Work on the Project.

L. Audits

1. The Contractor's QA/QC program shall provide for documented audits to verify that QA/QC procedures are being fully implemented by the Contractor as well as its subcontractors. Audit records shall be made available to the Engineer upon request.

2. The Contractor shall provide to the City, a quarterly report indicating any outstanding and unresolved exceptions to the QA/QC program or contract documents. The report will include documentation on any standards modifications, corrections, failed tests and a review of field procedures and checks and balances effectiveness.

M. Documented Control/Quality Records

1. The Contractor shall establish methods for control of Contract Documents that describe how Drawings and Specifications are received and distributed to assure the correct issue of the document being used. The methods shall also describe how as-built data are documented and furnished to the Engineer.

2. The Contractor shall maintain evidence of activities affecting quality, including operating logs, records of inspections and tests, audit reports, material analyses, personnel qualification and certification records, procedures, and document review records.

3. Quality records shall be maintained in a manner that provides for timely retrieval, and traceability. Quality records shall be protected from deterioration, damage, and destruction. The Contractor shall maintain an automated exceptions list of any non-conforming or defective or substandard work.

4. The Contractor shall provide a list with specific records as specified in the Contract Documents which will be furnished to the Engineer at the completion of activities and in conjunction with logs and location drawings.

N. Acceptance of QA/QC Plan: The Engineer's review and acceptance of the Contractor's QA/QC Plan shall not relieve the Contractor from any of its obligations for the performance of the Work. The Contractor's QA/QC staffing is subject to the Engineer's review and continued acceptance. The City, at its sole option, without cause, may direct the Contractor to remove and replace the

QA/QC representative. No Work covered by the QA/QC Plan shall start until the Engineer's acceptance of Contractor's QA/QC plan has been obtained.

O. The Engineer may perform independent quality assurance audits to verify that actions specified in Contractor's QA/QC Plan have been implemented. No Engineer audit finding or report shall in any way relieve Contractor from any requirements of this Contract.

1.07 TESTING SERVICES

A. All tests which require the services of a laboratory to determine compliance with the Contract Documents shall be performed by an independent commercial testing firm acceptable to Engineer. The testing firm's laboratory shall be staffed with experienced technicians, properly equipped and fully qualified to perform the tests in accordance with the specified standards. All standard quality assurance testing and installation verification testing will be at the expense of the Contractor.

B. Testing, when required, will be in accordance with all pertinent codes and regulations and with procedures and requirements of the American Society for Testing and Materials (ASTM).

C. The Engineer shall have the right to inspect work performed by the independent testing laboratory both at the project and at the laboratory. This shall include inspection of the manual, equipment calibrations, proficiency sample performance, etc.).

D. Testing services provided by the City, if any, are for the sole benefit of the City; however, test results shall be available to the Contractor. Testing necessary to satisfy Contractor's internal quality control procedures shall be the sole responsibility of Contractor.

E. Testing Services Provided by the Contractor

1. Unless otherwise specified, and in conjunction with, all other specified testing requirements, the Contractor shall provide the following testing services, and submit a detailed testing plan for each along with proposed forms for Engineer's review:

2. Moisture-density and relative density tests on embankment, fill, and backfill materials.

3. In-place field density test on embankments, fills and backfill.

4. QC testing of all precast and/or pre-stressed concrete

5. All other tests and engineering data required for the Engineer's review of materials and equipment proposed to be used in the Work

6. In addition, the following QC tests shall be performed by the Contractor:

   a. Holiday testing of pipeline and all other coatings systems applied to surfaces as required by the Engineer
   b. Slumps, air bucket tests, compression tests and other confirmation tests
   c. Air testing of field-welded joints for steel pipe or pipe cylinders and fabricated specials.
   d. All testing and inspection of welding work including, but not limited to, welding procedure qualifications, welder operator qualifications, all work performed by the certified welding inspector, all appropriate nondestructive testing of welds and all repair and retest of weld defects.

7. Testing, including sampling, shall be performed by the Contractor's testing firm's laboratory personnel, in the manner and frequency indicated in the Specifications. The Engineer shall have the right to stipulate the location of the confirmation tests. The Contractor shall provide preliminary representative samples of materials to be tested, to the testing firm's laboratory, in required quantities.

8. The testing firm's laboratory shall perform all laboratory tests within a reasonable time consistent with the specified standards and will furnish a written report of each test.

9. Where such inspection and testing are to be conducted by an independent laboratory agency, the sample or samples shall be selected by such laboratory or agency or the Engineer and shipped to the laboratory by the Contractor at Contractor's expense.

10. Notify laboratory sufficiently in advance of operation to allow for the assignment of personnel and schedules of tests.

F. Transmittal of Test Reports:

1. Written reports of tests and engineering data furnished by Contractor for Engineer's review of materials and equipment proposed to be used in the Work shall be submitted as specified for Shop Drawings. Final transmittal of all Project testing records will be required as a final close-out submittal for the release of retainage.

2. Promptly process and distribute all required copies of test reports and related instructions to insure all necessary retesting or replacement of materials with the least possible delay in progress of the Work.

.

+ + + END OF SECTION 01400 + + +

SECTION 01410

TESTING LABORATORY SERVICES

PART 1 GENERAL

1.01 SCOPE

A. This Section includes testing which the City/Engineer may require, beyond that testing required of the manufacturer, to determine if materials provided for the Project meet the requirements of these Specifications.

B. This section also includes all testing required by the Owner to verify if work performed by the Contractor is in accordance with the requirements of these specifications, i.e., concrete strength and slump testing, soil compaction, etc.

C. This section does not include testing required in various sections of these specifications to be performed by the manufacturer, e.g. testing of pipe, pipe materials, etc.. Where no testing requirements are described in various sections of these specifications, but the City/Engineer decides that testing is required to demonstrate compliance with material or performance standards, the City/Engineer may require testing to be performed under current pertinent standards for testing.

D. An independent testing laboratory shall be selected by the Contractor approved by the City/Engineer and paid by the Contractor. The laboratory must be approved in writing by the City/Engineer before any testing services are performed.

E. The Contractor shall pay directly for the services of the independent testing laboratory for all testing required under this Contract.

F. Employment of the testing laboratory shall in no way relieve the Contractor of Contractor's obligation to perform work meeting the requirements of the Contract.

G. Testing laboratory services will be required for, but not be limited to:

1. Cement
2. Aggregate
3. Concrete
4. Steel and Metals

5. Welding

6. Backfill and Compaction

7. Bituminous Pavement

1.02 LABORATORY DUTIES

A. Cooperate with the Owner, City/Engineer and Contractor.

B. Provide qualified personnel promptly on notice.

C. Perform specified inspections, sampling and testing of materials.

1. Comply with specified standards, ASTM, other recognized authorities, and as specified.

2. Ascertain compliance with requirements of the Contract Documents.

D. Promptly notify the City/Engineer and Contractor of irregularity or deficiency of work which are observed during performance of services.

E. Promptly submit three copies (two copies to the City/Engineer and one copy to the Contractor) of report of inspections and tests in addition to those additional copies required by the Contractor with the following information included:

1. Date issued

2. Project title and number

3. Testing laboratory name and address

4. Name and signature of inspector

5. Date of inspection or sampling

6. Record of temperature and weather

7. Date of test

8. Identification of product and Specification section

9. Location of sample or test in the Project

10. Type of inspection or test

11. Results of test and observations regarding compliance with the Contract Documents

12. Interpretation of test results, when requested by the City/Engineer

F. Perform additional services as required.

G. The laboratory is not authorized to:

1. Release, revoke, alter or enlarge on requirements of the Contract Documents

2. Approve or accept any portion of the Work

3. Perform any duties of the Contractor.

1.03 CONTRACTOR RESPONSIBILITIES

A. Cooperate with laboratory personnel; provide access to Work and/or manufacturer's requirements.

B. Provide to the laboratory, representative samples, in required quantities, of materials to be tested.

C. Furnish copies of mill test reports.

D. Furnish required labor and facilities to:

1. Provide access to Work to be tested;

2. Obtain and handle samples at the site;

3. Facilitate inspections and tests;

4. Build or furnish a holding box for concrete cylinders or other samples as required by the laboratory.

E. Notify the laboratory sufficiently in advance of operation to allow for the assignment of personnel and schedules of tests.

F. Laboratory Tests: Where such inspection and testing are to be conducted by

an independent laboratory agency, the sample(s) shall be selected by such laboratory or agency, or the City/Engineer, and shipped to the laboratory by the Contractor at Contractor's expense.

G. Copies of all correspondence between the Contractor and testing agencies shall be provided to the City/Engineer.

1.04 QUALITY ASSURANCE

A. Testing shall be in accordance with all pertinent codes and regulations and with procedures and requirements of the American Society for Testing and Materials (ASTM).

1.05 PRODUCT HANDLING

A. Promptly process and distribute all required copies of test reports and related instructions to insure all necessary retesting or replacement of materials with the least possible delay in the progress of the Work.

1.06 FURNISHING MATERIALS

A. The Contractor shall be responsible for furnishing all materials necessary for testing.

1.07 CODE COMPLIANCE TESTING

A. Inspections and tests required by codes or ordinances or by a plan approval authority, and made by a legally constituted authority, shall be the responsibility of, and shall be paid for by the Contractor, unless otherwise provided in the Contract Documents.

1.08 CONTRACTOR'S CONVENIENCE TESTING

A. Inspection or testing performed exclusively for the Contractor's convenience shall be the sole responsibility of the Contractor.

1.09 SCHEDULES FOR TESTING

A. Establishing Schedule

1. The Contractor shall, by advance discussion with the testing laboratory selected by the Owner, determine the time required for the laboratory to perform its tests and to issue each of its findings, and make all arrangements for the testing laboratory to be on site to provide the

required testing.

2. Provide all required time within the construction schedule.

B. When changes of construction schedule are necessary during construction, coordinate all such changes of schedule with the testing laboratory as required.

C. When the testing laboratory is ready to test according to the determined schedule, but is prevented from testing or taking specimens due to incompleteness of the Work, all extra costs for testing attributable to the delay will be back charged to the Contractor and shall not be borne by the Owner.

1.10 TAKING SPECIMENS

A. Unless otherwise provided in the Contract Documents, all specimens and samples for tests will be taken by the testing laboratory or the City/Engineer.

1.11 TRANSPORTING SAMPLES

A. The Contractor shall be responsible for transporting all samples, except those taken by testing laboratory personnel, to the testing laboratory.

PART 2 PRODUCTS

(NOT USED)

PART 3 EXECUTION

3.01 TESTS AND CERTIFICATIONS

A. As a minimum, the following tests shall be performed and the following certification provided:

1. Cement: Certified test results by cement manufacture or by independent laboratory shall be furnished as required by the City/Engineer.

2. Aggregate and Mortar Sand: Certified test results by aggregate producer or by independent laboratory shall be furnished as required by the City/Engineer.

3. Concrete:

a. Certified test results of all concrete in accordance with ASTM C31, C39 and C172.
b. Slump tests:
   (1) Perform slump tests on the job in accordance with ASTM standards
   (2) One (1) slump test shall be performed for each 25 cubic yards of concrete

B. Steel and Miscellaneous Metal: Reinforcing steel, structural steel and miscellaneous metal may be inspected visually on site by the City/Engineer.

C. Welding: 1 percent of all structural welds during construction shall be inspected either visually or by an independent laboratory as required by the City/Engineer.

D. Laboratory tests of compacted backfill shall be made in accordance with ASTM D698. In-place density tests shall be made in accordance with ASTM D1556 or D2922. Compaction testing shall be required as specified in paragraph 3.16 of Section 02225.

E. Bituminous Concrete Pavement: Material testing for bituminous concrete shall be performed as directed by the City/Engineer, GDOT and the City of Atlanta Department of Public Works. Refer to paragraph 3.11 of Section 02700.

+ + + END OF SECTION 01410 + + +

SECTION 01500

Temporary Control of Construction Operations

PART 1 – GENERAL

1.01 SCOPE

A. The work covered by this Section includes furnishing all labor, equipment, and materials required for temporary control of construction operations.

1.02 PUMPING

A. The Contractor shall furnish and operate pumping and appurtenant piping for dewatering, flow rerouting, or any similar purposes.

B. Standard Pumping equipment (as opposed to Reduced Noise Emitting Pumps ex. Quiet Zone, etc.) that could disturb the public shall be operated only during a standard workday or as approved in writing by the Engineer.

C. No discharge of raw sewage will be permitted to area watercourses under any circumstances. The Contractor shall be held responsible for any such discharge including, but not limited to, fines, legal fees, and any other cost associated with such a discharge.

1.03 TEMPORARY FACILITIES

A. The Contractor shall provide all temporary facilities for water, heat, electric light, and power as required for the work during the entire period of operations. Contractor shall be responsible for payment of utility costs for the duration of construction.

B. The Contractor shall provide temporary toilets as required and shall maintain them in a sanitary condition for the duration of the work and remove them at completion.

C. On or before the completion of the work, the Contractor shall remove all temporary facilities, together with all rubbish and trash, as directed by the Engineer.

1.04 STORAGE

A. The Contractor shall secure adequate storage to accommodate the required equipment, vehicles, and materials for the period of performance of the Contract.

1.05 USE OF PREMISES

A. The Contractor shall not load nor permit any part of any structures to be loaded with a weight that will endanger its safety.

B. The Contractor shall confine his apparatus, the storage of materials and the operations of his workers to the limits defined by laws, ordinances, permits, or directions of the Engineer and shall not unduly encumber the premises with his materials.

C. The Contractor shall enforce the instructions of the Engineer regarding signs, advertisements, fire and smoking.

1.06 FLOW CONTROLS

A. During the entire span of the construction, including inspection, the Contractor shall be responsible to maintain flow in the sewerage system and service to all properties.

B. Any line plugging or flow restriction shall be with equipment designed specifically for such purpose. A sewer line plug shall be inserted into the line at a manhole upstream from the section being worked on.

C. Care shall be taken to prevent sewage from backing into buildings, ponding, flooding, or otherwise damaging public or private property.

D. Controls shall be utilized to prevent sewage from entering surface drainage facilities or water courses, either directly or as a result of overflow from drainage structures.

E. When bypass pumping is required and ordered by the Engineer, the Contractor shall supply the necessary pumps, conduits, and other equipment to divert the flow of sewage around the manhole section in which work is to be performed into a downstream section. The bypass system shall be of sufficient capacity to handle all existing flows.

F. No flows shall be diverted from the sewerage system unless a schedule has been approved by the Georgia Environmental Protection Division.

G. See Specification Section 02750 – Wastewater Flow Control, for additional requirements.

1.07 MAINTENANCE OF EXISTING OPERATION

A. The Contractor shall schedule all demolition and construction and maintain continuous operation of the existing wastewater system facilities.

B. Piping to be abandoned shall be plugged with concrete in a manner approved by the Engineer, so as to be made watertight. All active utilities traversing the site shall be preserved in operating condition.

1.08 MAINTENANCE DURING CONSTRUCTION

A. The Contractor shall maintain, at his expense, the work during construction and until final acceptance of all work under the Contract. Continuous and effective work shall be prosecuted day by day, with adequate equipment and forces as required to keep the backfill, pavement, structures, pipe lines and other features in satisfactory and acceptable condition at all times.

B. In the event the Contractor fails to remedy any unsatisfactory situation, within twenty-four hours after receipt of written notice from the Engineer describing the unsatisfactory conditions, the City may immediately proceed with adequate forces and equipment to maintain the project; and the entire cost of this maintenance will be deducted from the monies otherwise due the Contractor under the Contract.

C. As an alternative to the above specified maintenance, the cost of all of the items, which are not properly maintained, may be deducted at the Contract Prices from the current partial payment request even if such items have been paid for in previous estimates.

1.09 CLEAN-UP AND DISPOSAL

A. At the end of each day's operation, the Contractor shall thoroughly clear the work site of all dirt or debris, and generally restore the site to an acceptable condition. Upon completion of the work, all excess material and rubbish shall be removed from the job site and disposed of. The surrounding construction area shall be left in as good a condition as that which existed prior to construction.

B. The Contractor shall transport and expeditiously dispose of all materials removed from the construction site. Disposal shall be at a site approved by the Engineer at no additional cost to the City and in a manner consistent with all-applicable codes and regulations.

1.10 CONSTRUCTION ALONG HIGHWAYS, STREETS, AND ROADWAYS

A. Install pipe lines and appurtenances along highways, streets and roadways in accordance with the applicable regulations of, and permits issued by, the Georgia Department of Transportation and City of Atlanta, with reference to construction operations, safety, traffic control, road maintenance and repair.

B. Traffic Controls:

1. The Contractor shall provide, erect, and maintain all necessary barricades; suitable and sufficient lights and other traffic control devices; provide qualified flagmen where necessary to direct traffic; take all necessary precautions for the protection of the work and the safety of the public. Flagmen shall be certified by a Georgia DOT-approved flagman training program.

2. Construction traffic control devices and their installation shall be in accordance with the current Manual on Uniform Traffic Control Devices for Streets and Highways.

3. Placement and removal of construction traffic control devices shall be coordinated with the Georgia Department of Transportation and City a minimum of 48 hours in advance of the activity.

4. Placement of construction traffic control devices shall be scheduled ahead of associated construction activities. Construction time in street right-of-way shall be conducted to minimize the length of time traffic is disrupted. Construction traffic control devices shall be removed immediately following their useful purpose. Traffic control devices used intermittently, such as "Flagmen Ahead," shall be removed and replaced when needed.

5. Existing traffic control devices within the construction work zone shall be protected from damage. Traffic control devices requiring temporary relocation shall be located as near as possible to their original vertical and horizontal locations. Original locations shall be measured from reference points and recorded in a log prior to relocation. Temporary locations shall provide the same visibility to affected traffic as the original location. Relocated traffic control devices shall be reinstalled in their original locations as soon as practical following construction.

6. Construction traffic control devices shall be maintained in good repair, and shall be clean and visible to affected traffic for daytime and nighttime operation. Traffic control devices affected by the construction work zone shall be inspected daily.

7. Construction warning signs shall be black legend on an orange background. Regulatory signs shall be black legend on a white background. Construction sign panels shall meet the minimum reflective requirements of the Georgia Department of Transportation and City of Atlanta. Sign panels shall be of durable materials capable of maintaining their color, reflective character and legibility during the period of construction.

8. Channelization devices shall be positioned preceding an obstruction at a taper length as required by the current Manual on Uniform Traffic Control Devices for Streets and Highways, as appropriate for the speed limit at that location. Channelization devices shall be patrolled to insure that they are maintained in the proper position throughout their period of use.

C. Construction Operations:

1. Perform all work along highways, streets and roadways to minimize interference with traffic.

2. Stripping: Where the pipe line is laid along road right-of-way, strip and stockpile all sod, topsoil and other material suitable for right-of-way restoration.

3. Trenching, Laying and Backfilling: Do not open the trench any further ahead of pipe laying operations than is necessary. Backfill and remove excess material immediately behind laying operations. Complete excavation and backfill for any portion of the trench in the same day.

4. Shaping: Reshape damaged slopes, side ditches, and ditch lines immediately after completing backfilling operations. Replace topsoil, sod and any other materials removed from shoulders.

5. Construction operations shall include cleanup and utility exploration.

D. Excavated Materials: Do not place excavated material along highways, streets and roadways in a manner that obstructs traffic. Sweep all scattered excavated material off the pavement in a timely manner.

E. Drainage Structures: Keep all side ditches, culverts, cross drains, and other drainage structures clear of excavated material. Care shall be taken to provide positive drainage to avoid ponding or concentration of runoff.

F. Landscaping Features: Landscaping features shall include, but are not necessarily limited to, fences, property corners, cultivated trees, and shrubbery, man-made improvements, subdivision signs, and other signs within the right-of-way and easement. The Contractor shall take extreme care in moving landscape features and promptly re-establishing these features.

G. Maintaining Highways, Streets, Roadways and Driveways:

1. Maintain streets, highways, roadways and driveways in suitable condition for movement of traffic until completion and final acceptance of the work.

2. During the time period between pavement removal and completing permanent pavement replacement, maintain highways, streets, and roadways by the use of steel running plates. The edges of running plates shall have asphalt placed around their periphery to minimize vehicular impact. The backfill above the pipe shall be compacted, as specified elsewhere up to the existing pavement surface to provide support for the steel running plates.

3. Furnish a road grader or front-end loader for maintaining highways, streets, and roadways. Make the grader or front-end loader available at all times.

4. Immediately repair all driveways that are cut or damaged. Maintain them in a suitable condition for use until completion and final acceptance of the work.

1.11 ACCESS ROADS

A. Streets, road and drives used by the Contractor for access to and from the site of the work shall be protected from damage caused by the normal traffic of vehicles used for or in connection with construction work. Any such damage done shall be repaired immediately and left in good condition at the end of the construction period. Any new access road construction shall be “all weather” and have drainage structures placed as shown or as required.

END OF SECTION

SECTION 01532E

Smoke Testing

PART 1 – GENERAL

1.01 WORK OF THIS SECTION

A. The objective of smoke testing of the City sewers is to locate specific sources of direct inflow to the City's sanitary sewers, such as storm sewer cross-connections, roof leaders, yard and basement drains, fountain drains, and abandoned building sewers, and to locate system defects which contribute inflow and/or infiltration to the City's sewers, including broken sewer pipe and service laterals and areas subject to ponding.

B. Smoke testing work shall be conducted on all pipes selected by the Engineer.

C. It is the responsibility of the Contractor to comply with OSHA regulations, the City's Safety Guidelines, and the City's Confined Space Guidelines as applicable. The Contractor shall submit written documentation that all workers have received the training required under these regulations and guidelines by qualified persons or organizations.

D. The Contractor shall provide all labor, material, supplies, equipment, and transportation necessary to complete the smoke testing work.

E. Smoke testing may affect residences and/or business in the area being tested. Therefore, public and emergency response notification is an important aspect of this testing procedure. Such notification shall be conducted as specified herein and is a prerequisite for initiating smoke testing.

1.02 EXPERIENCED WORKERS

A. Supervisor of the field crews shall have received proper training in this function and have a minimum of three years experience in performing smoke testing including safe working practices, access to and decent into confined spaces, etc.

B. Crew Leaders/Field Supervisors assessing the condition of manholes shall have received proper training in this function and have a minimum of one year experience in performing smoke testing including safe working practices and access to and decent into confined spaces, etc. No crew members shall enter confined spaces without the necessary certified training and at least one year experience.

C. The Contractor shall provide the designated Engineer with written documentation that all crew members responsible for smoke testing have received the proper training and where required the requisite experience.

D. The Contractor shall provide a detailed reference list of Smoke Testing experience during the last three years. References shall include contact (name and position), agency, telephone number, address, date of work, and length of sewer inspected.

1.03 SUBMITTALS

A. The Contractor shall provide to the Engineer the following information in writing prior to the set deadline, or at the indicated frequency, whichever is applicable.

Type of Submittal	Time/Frequency of Submittal
Contractor's Record of Smoke Testing Experience	At Pre-Construction Meeting
Worker's Confined Space Certification	At commencement
Manufacturer's data and literature on the smoke proposed for use in smoke testing, including the MSDS sheet	At commencement

B. Daily reports (by 9.00 a.m. on day following survey) and weekly reports (by 9.00 a.m. on Monday following week of survey) shall be e-mailed to the designated Engineer. A copy of the fire department notification of daily smoke testing schedule, advising area of start time and ending time, shall also be e-mailed to the designated Engineer.

C. The Contractor shall complete a daily written record (diary) detailing the work carried out and any small items of work, which were incidental to the contract. The Contractor shall include in his daily record, reference to:

1. Delays: e.g. Dense traffic, lack of information, sickness, labor or equipment shortage

2. Weather: conditions, e.g. rain, etc.

3. Equipment: on site, e.g. specialist cleaning, by-pass equipment, etc.

4. Submittals: to the designated engineer representative

5. Personnel: on site by name, e.g., all labor, Specialist Services, etc.

6. Accident: report, e.g. all injuries, vehicles, etc.

7. Incident: report, e.g. damage to property, property owner complaint, etc.

8. Major defects encountered, including collapsed pipe, if any: e.g. cave-ins, sink holes, etc.

9. Visitors: on site

The designated Engineer Representative on site shall certify receipt of the daily record noting any items and adding any observations with reference to claims for payment to the Contractor. The Engineer Representative may at his discretion, for which the Contractor must receive direction in writing, an exception to this requirement for weekly submission of progress rather than for daily submission.

1.05 RELATED SECTIONS

A. The Work of the following Sections apply to the Work of this Section. Other Sections of the Specifications, not referenced below, shall also apply to the extent required for proper performance of the Work.

1.06 DATA QUALITY

A. Data must be of a quality that accurately represents conditions found in the field and provided in form that matches valid criteria of the City's maintenance Management System. Contractor must implement a Quality Assurance/Quality Control (QA/QC) Program that follows a written procedure. The written procedure must be submitted for approval by the Engineer. Written documentation must be provided, each time that data is submitted, indicating results of the QA/QC check.

B. The Contractor’s data quality control program shall include routine outside auditing of the work completed by a qualified subcontractor. The qualified subcontractor shall meet the minimum specified Contract requirements for the performance of the work and shall be approved in writing by the Engineer. The accuracy of the Contractor’s data shall be based on the percentage of the data confirmed correct by the subcontractor. The minimum acceptable accuracy of the data shall be 85%. The general sequence of the auditing shall be as follows:

1. The Engineer shall randomly select one day per month, typically in the first week of the month, and the work performed during this day shall be reviewed and/or repeated by the qualified subcontractor.

2. If the work is greater than or equal to 85% accurate, no further outside auditing will be required for the month unless requested by the Engineer at his sole discretion. The cost for this audit is included in the allowances specified in the Bid Form.

3. If the work is less than 85% accurate, the Contractor shall at his own expense repeat and/or correct the work and have the work re-audited by the qualified subcontractor.

4. If this work is still less than 85% accurate, the Contractor shall repeat and/or correct and have the work re-audited, at his own expense, until the work is greater than or equal to 85% accurate.

5. When this re-audited work is found to be greater than or equal to 85% accurate, the Contractor shall have the work of another randomly selected day in the same month reviewed and/or repeated by the qualified subcontractor at the Contractor's own expense.

6. Steps 2 through 5 shall be repeated at the Contractor's own expense until the selected day is 85% accurate on the initial audit.

7. The occurrence of five randomly selected days not achieving 85% accuracy on initial subcontractor review will constitute cause for dismissal.

8. If the Contractor successfully meets the 85% accuracy requirement for the initial randomly selected day for two consecutive months (Step 2 above), the Contractor may subsequently audit one day every other month. The Contractor may continue auditing one day every other month until the initial randomly selected day does not meet 85% accuracy, at which time it must resume auditing one day every month.

PART 2 – PRODUCTS

2.01 SMOKE BOMBS & BLOWERS

A. Smoke Bombs or high grade mineral oil shall be used to generate the smoke required for testing. Smoke shall be dense, non-toxic, odorless, and non-staining. Smoke bombs or canisters shall have a minimum of a 3-minute continuous duration and shall be equal to those manufactured by Superior Signal Company.

B. Blowers and, where required, double blowers, shall be used to force smoke into the sewer and shall be portable, custom-mounted to be installed over an open manhole casting, and shall have a maximum capacity of 4,500 cfm each and a minimum capacity of 2,000 cfm.

PART 3 – EXECUTION

3.01 METHODOLOGY

A. Intensified smoke testing techniques shall be employed in all cases. Intensified techniques shall include at least one blower capable of a free air delivery of at least 2,000 cfm and smoke generation for a minimum of nine minutes. Up to three line legments but no more than 1,000 feet of sewer main may be tested at one time. However, a separate Smoke Test Report must be filled out for each line segment even if no defect is found. Line sections shall be adequately isolated if necessary by using sandbags, baffles, or other methods approved by the designated Engineer Representative. Smoke emanating from vents on building or adjacent manholes will determine the extent of successful smoke testing. Only clearly visible, dense smoke will qualify the sewer main tested for acceptance up to 1,000 feet of sewer main.

B. Additional measures describing methodologies and products to smoke test larger diameter pipes shall be submitted for prior approval before smoke testing commences on all sewers greater than 18-inches diameter and all sewers greater than 15-feet in depth.

C. Restrictions: Smoke testing shall not be conducted on rainy days, on cloudy days following rain, or when saturated soil conditions exist. Rainy days are defined as days where greater than 0.2 inches of rain fall in any consecutive twelve-hour period. Testing shall be closely monitored on windy days. If smoke coming out of the ground is blown away so quickly as to escape accurate detection and/or photo documentation, testing shall cease until such time that weather conditions permit an accurate record of smoke testing results.

D. The perimeter of each residence or commercial building shall be completely inspected, front and back, for sources of smoke. The roofs of each building shall be visually inspected for evidence of roof drains connected to sanitary drains.

3.02 DOCUMENTATION

A. The following data will be recorded on a paper form and entered into a database by the Contractor, using the required file format in Microsoft ACCESS ®. Data, where specified, will be recorded using CODES provided by the Engineer. A hard copy and electronic diskette shall be submitted to the Engineer. The smoke test database shall include the following information at a minimum:

1. Description of the smoke return (“leak”), including intensity code and amount (i.e. equivalent gpm)

2. Date and time

3. Location, including reference to the relevant manhole segment (upstream and downstream manhole incorporating the City manhole numbering system) and the nearest street address

4. Area and type of surface drained by the smoke return ("leak")

5. Testing personnel

6. Digital color photographs filenames of the results of each smoke test

B. Schematic layout of the manholes and sewer lines under testing (including address and location, photo number and direction taken, dimensional ties and offsets to the documented smoke returns ("leaks"), and area and type of surface drained. Note geographical orientation relative to north)

C. Example Smoke Testing Report Form is provided at the end of this section to illustrate the content intended to be received.

3.03 PHOTOGRAPHIC DOCUMENTATION PROCEDURES

A. The Contractor shall document each smoke leak or series of leaks by high-resolution digital photograph. Digital photographs shall be provided in jpeg (.jpg) format. The resolution of the photographs shall be a minimum of 72 dpi x 72 dpi and minimum dimensions of 640 X 480 pixels. The photographs shall be referenced in the database by filename along with the location of the smoke defect using the 90-degree laser measurement system.

B. Photographs will be taken in such a way that the smoke leak is clearly visible in the foreground and a distinct fixed reference is visible in the background. For example, if the smoke leak is on a private service line in front of a house, the photograph should include a sufficient image of the house so that someone can go back to the site and place himself/herself near the smoke leak, with nothing more that the photograph and an address. This method of referencing something fixed will support QA/QC to ensure that smoke leaks, and their associated data, can be confirmed by someone other than the original smoke crew.

C. Groups of digital photographs orientated so that the long side of the photograph is horizontal and that 3"x 5" printed copies can be incorporated in the hard copy of the smoke testing report, shall be supplied on a CD-ROM(s) incorporated for each work order issued by the Engineer unless otherwise directed.

D. The digital photographs shall incorporate annotated references superimposed on the image to upstream manhole number and date when the photograph was taken. The annotation shall be clearly visible and shall have a 12pt (uppercase) font size. Each photograph shall have a clearly labeled frame number. The frame number shall include the upstream manhole number then the letter S followed by the three- character right justified photo sequence number (e.g., 12340145601S003). Reference to location of each photograph shall be indicated on the sketches at the end of the report. A dot shall be drawn on the sketch to indicate the position of the photographer, with an arrow pointing in the direction that the photograph was taken

E. Example photographs are provided at the end of this section to illustrate the content intended to be received.

3.04 PUBLIC NOTIFICATION

Refer to Specification Section 01351: Public Involvement.

3.05 TRAFFIC CONTROL

A. Refer to Specification Section 01500: Temporary Control of Construction Operations for requirements.

3.06 DELIVERABLES

A. Electronic database with defect locations, along with at least one digital photograph of each smoke leak shall be submitted to the designated Engineer. An official transmittal letter shall accompany all deliverables. The electronic database, using the required file format in Microsoft ACCESS ® Version 2003, shall be tied to the City GIS sewer maps through the manhole numbers. A separate database shall be submitted for each sewershed. A cumulative corrected database submittal must accompany any corrected hard copy submittals, and must properly reflect corrections made to the hard copy.

B. A binder with hard copies of the smoke test reports including smoke testing photos and smoke locations shall be submitted to the Engineer – see example at end of section. Data for each sewershed must be submitted separately - each submittal must contain data for only one sewershed. The first submittal for each sewershed must be delivered in a 4-inch binder. The binder must be labeled on the spine, as well as the front cover, with company name, sewershed, date, investigation method, submittal number, and Clean Water Atlanta logo. All subsequent data submittals for each sewershed must be submitted in properly labeled envelopes. Corrected data must be submitted separately from preliminary (new) data, and must be clearly labeled as such. All data submittals must be organized in

ascending order of upstream manhole numbers. A summary sheet listing each sewer line segment for which data is being submitted must be included with each submittal. Smoke testing data must be submitted separately from CCTV data and dye testing data.

C. All photographs shall be digital pictures in both hard copy and electronic format.

D. Data Collection Methods: Electronic data must be delivered in the prescribed method for uploading to the City's Maintenance Management System. However, the Contractor may use whatever method he chooses to collect the data. The data tables to be populated are described in detail at the end of this section. Electronic copies of blank data tables will be provided to Contractor at the Pre Construction Conference.

E. The Smoke Testing Form must be delivered in the format given at the end of this section.

Date Visited:_____

City of Atlanta
Department of Public Works

Notice To Residents

Smoke Testing of Sewer Lines

"Contractors Name" represented by "personnel involved in the smoke testing" under contract with the City of Atlanta, will be conducting smoke tests within your neighborhood as part of an ongoing program to detect leaks within the sewer collection system in the next few days. Smoke that you may see is **non-toxic, creates no fire hazard, and will not harm children, pets, or plants**. Persons with severe asthma should avoid breathing any smoke to avoid irritation. Please help us notify shut-ins in your area that may not receive this notice.

If smoke enters your house, you should report it to the crews conducting the test so we can help you locate the source while the test is still in progress. Repairs to your internal plumbing are at your own discretion, we are only testing for problems on the sewer lines outside.

Please accept our apologies for any inconvenience this may cause and thank you for your assistance. If you should have any questions regarding these tests, please call the

Department of Public Works Information Offices at (404) 330-6980.

Under normal circumstances, the smoke will not enter your home if the plumbing is working properly. You will see smoke coming from vents on the roof of your home which is a normal occurrence. In most cases, entrance of smoke in a dwelling is through fixtures that are not routinely used; therefore we would request that you run water at all of your fixtures to ensure that all of the drain traps are full of water. **Please fill the traps immediately upon receiving this notice with approximately one quart of water.** The testing will occur within the next few days so that the water will not have time to evaporate before we have completed our work. It is not necessary that you be home during these tests. If smoke gets in while you are out, it will dissipate without leaving any odors. The smoke used is manufactured specifically for this application and is, therefore, non-toxic and non-staining.

(EXAMPLE)
SMOKE TESTING REPORT **SERIAL #**

UPSTREAM MANHOLE: . . . . . **PROJECT:**

DOWNSTREAM MANHOLE: . . . . . **SEWERSHED:**

DATE: **LENGTH:** **SMOKE TEST TEAM:** ----------

SN	SOURCE ADDRESS /LOCATION	GPS ID	RESULTS	STATUS	SOURCE	SMOKE	AREA FT	AREA FT	RUN OFF	CCTV Y/N	PHOTO NO.#
1											
2											
3											
4											
5											
6											
7											
8											

RESULTS CODES
1. POSITIVE
2. SUSPECT
3. NEGATIVE
4. CANNOT TEST

STATUS CODES
1. PRIVATE
2. PUBLIC

SOURCE TYPE CODES
ABS ABANDONED SERVICE
AD AREA DRAIN
BCO BROKEN CLEANOUT
CBX CATCH BASIN
DEP DEFECTIVE PLUMBING
DWD DRIVEWAY DRAIN
EXP EXPOSED PIPE
FCL FRAME COVER LEAKS
FDD FOUNDATION DRAIN
HOL SOIL FISSURES
HSD FISSURES IN STORM DITCH
MCC MISSING CO COVER
MFC MANHOLE FRAM COVER
MHS MANHOLE STRUCTURE
MLK MULTIPLE SOIL FISSURES
RLD ROOF LEADER CONNECT
SMH STORM MANHOLE
SWD STAIRWELL DRAIN
WWD WINDOW WELL DRAIN

SMOKE CODES / INTENSITY
1. LIGHT
2. MEDIUM
3. HEAVY

RUNOFF CODES
1. NO PAVING
2. 25% PAVING
3. 50% PAVING
4. 75% PAVING
5. 100% PAVING

* NOTE: Defect Position established using GPS coordinates/ID

N

COMMENTS

(EXAMPLE)
SMOKE TESTING PHOTOS **SERIAL #**

UPSTREAM MANHOLE		
DOWNSTREAM MANHOLE		
DATE	**CONTRACTOR .**	**CREW.**

COMMENTS _____

END OF SECTION

[This page intentionally left blank]

SECTION 01532F

Dye Testing

PART 1 – GENERAL

1.01 WORK OF THIS SECTION

A. The objective of dye water testing, when used in conjunction with CCTV is to pinpoint specific points of entry of inflow into the sanitary sewer system, such as direct and indirect connections of storm drains, yard drain inlets and pipes, sinkholes, leaking manholes in unpaved areas and leaking manhole covers and rings. Dye water testing shall also be used to trace line segments during sewer map updating, and co-relationship of individual properties to sewer lines.

B. Dye Testing shall be conducted at sites recommended by the Contractor or designated Engineer Representative, based upon the findings of other source detection methods, as approved by the Engineer.

C. It is the responsibility of the Contractor to comply with OSHA regulations, the City's Safety Guidelines, and the City's Confined Space Guidelines as applicable. The Contractor shall provide written documentation that all workers have received the training required under these regulations and guidelines by qualified persons or organizations.

D. The Contractor shall provide all labor, material, supplies, equipment, and transportation necessary to complete the dye testing.

E. Dye Testing may affect residences and/or business in the area being tested. Therefore, notification of affected property owners is an important aspect of this testing procedure, and such notification shall be conducted as specified herein as a prerequisite for conducting dye testing.

1.02 EXPERIENCED WORKERS

A. Supervisor of the field crews shall have received proper training in this function and have a minimum of three years experience in performing such Dye Tests including safe working practices, access to and decent into confined spaces, etc.

B. Crew Leaders/Field Supervisors performing Dye Testing shall have received proper training in this function, including safe working practices and access to and decent into confined spaces, etc. No crew members shall enter confined spaces without the necessary certified training.

C. The Contractor shall provide the designated Engineer with written documentation that all crew members responsible for Dye Testing have received the proper training and where required the requisite experience.

D. The Contractor shall provide a detailed reference list of Dye Testing experience. References shall include contact (name and position), agency, telephone number, address, date of work, and number of manholes inspected.

1.03 SUBMITTALS

A. The Contractor shall provide to the Engineer the following information in writing prior to the set deadline, or at the indicated frequency, whichever is applicable.

Type of Submittal	Time/Frequency of Submittal
a) Contractor's Record of Dye Testing Experience	At Pre-Construction Meeting
b) Workers Confined Space Certification	At commencement
c) Manufacturer's data and literature on the dye proposed for use in smoke testing	At commencement

B. Daily reports (by 9.00 a.m. on day following survey) and weekly reports (by 9.00 a.m. on Monday following week of survey) shall be e-mailed to the Engineer's representative.

C. The Contractor shall complete a daily written record (diary) detailing the work carried out and any small items of work which were incidental to the contract. The Contractor shall include in his daily record, reference to:

1. Delays: e.g. dense traffic, lack of information, sickness, labor or equipment shortage

2. Weather: conditions, e.g. rain etc.

3. Equipment: on site, e.g. specialist cleaning, bypass equipment, etc.

4. Equipment: downtime, e.g. pump out of fuel, CCTV camera lights broken, etc.

5. Personnel: on site by name, e.g. all labor, specialist services, etc.

6. Submittals: to the designated Engineer, e.g. daily report, Dye Testing Report, etc.

7. Accident: report, e.g. all injuries

8. Incident: report, e.g. damages to property, property owner complaints, etc.

9. Major defects encountered, including collapsed pipe, if any: e.g. cave in, sink holes, etc.

10. Visitors: on site

D. The designated Engineer Representative on site shall certify receipt of the daily record noting any items and adding any observations with reference to claims for payment to the Contractor. The Engineer Representative may at his discretion, for which the Contractor must receive direction in writing, an exception to this requirement for weekly submission of progress rather than for daily submission.

1.04 RELATED SECTIONS

A. The Work of the following Sections apply to the Work of this Section. Other Sections of the Specifications, not referenced below, shall also apply to the extent required for proper performance of the Work.

1. Section 02752: Internal Sewer Condition Assessment

1.05 DATA QUALITY CONTROL

A. Data must be of a quality that accurately represents conditions found in the field and provided in form that matches valid criteria of the City's Maintenance Management System. Contractor must implement a Quality Assurance/Quality Control (QA/QC) Program that follows a written procedure. The written procedure must be submitted for approval by the Engineer. Written documentation must be provided each time that data is submitted indicating results of the QA/QC check.

PART 2 – PRODUCTS (Not Used)

PART 3 – EXECUTION

3.01 METHODOLOGY

A. The Contractor shall propose in writing the methodology to be used for

dye testing and submit the proposed methodology to the Engineer for approval prior to commencement of work together with the corresponding schedule. The proposed methodology shall include taking digital color photographs of the results of all dye testing.

B. As a minimum, Contractor flood the area over the leak with dyed water and check for dye at 15 minute intervals for up to one hour, noting positive or negative each time checked. Two photographs will be taken: one when dyed water is applied and a second when positive results are noted, or at the one-hour check if results are negative.

3.02 DOCUMENTATION

A. The following data shall be recorded by the Contractor, using the required file format in Microsoft ACCESS® on a paper form and entered into a database. Data, where specified, will be recorded using codes provided by the Engineer. A hard copy and electronic diskette shall be submitted to the Engineer. The dye test database shall include the following information at a minimum:

1. Date and time

2. Location, including reference to the relevant manhole segment (upstream and downstream manhole incorporating the City manhole numbering system) and the nearest street address

3. Testing personnel

4. Schematic layout of the manholes and sewer lines under test – noting location of sandbags and/or plugs

5. Precise location of the site of confirmed source of inflow or leak, as determined by the dye testing, keyed to the relationship to appropriate manhole and pipe numbers from the City's GIS mapping system and street address, and confirmation of any negative results of dye testing

6. Digital color photographs filenames of the results of each dye test

B. Example Dye Testing Report Form is provided at the end of this section to illustrate the content intended to be received.

3.03 PHOTOGRAPHIC DOCUMENTATION PROCEDURES

A. Digital photographs shall be provided in jpeg (.jpg) format. Resolution of photographs shall be a minimum of 72 dpi x 72 dpi and minimum

dimensions of 640 X 480 pixels. The Contractor shall document each dye leak or series of dye tests by high-resolution digital photograph. The photographs shall be included in the database along with the location of the dye test defect.

B. Groups of digital photographs orientated so that the long side of the photograph is horizontal and that 3"x 5" printed copies can be incorporated in the hard copy of the dye testing report, shall be supplied on a CD-ROM(s) incorporated for each work order issued by the Engineer unless otherwise directed.

C. The digital photographs shall incorporate annotated references superimposed on the image to upstream manhole number and date when the photograph was taken. The annotation shall be clearly visible and shall have a 12pt (uppercase) font size. Each photograph shall have a clearly labeled filename incorporating the upstream manhole ID followed by the letter “D” and the three character sequence number assigned by the digital camera (e.g. 12341211401D113). Reference to location of each photograph shall be indicated on the sketches at the end of the report.

D. Example photographs are provided at the end of this section to illustrate the content intended to be received.

3.04 PUBLIC NOTIFICATION

A. Refer to Specification Section 01351: Public Involvement.

3.05 TRAFFIC CONTROL

A. Refer to Specification Section 01500: Temporary Control of Construction Operations for requirements.

3.06 DELIVERABLES

A. Electronic database of dye test data and digital photographs of results shall be submitted to the designated Engineer. An official transmittal letter shall accompany all submittals. The electronic database using the required file format in Microsoft Access® version 2003, shall be tied to the City GIS sewer maps through the manhole numbers. A separate database shall be submitted for each sewershed. A cumulative corrected database submittal must accompany any corrected hard copy submittals, and must properly reflect corrections made to the hard copy.

B. A binder with hard copies of the dye test reports, location sketch and digital photographs shall be submitted to the designated Engineer – see example at end of section. Data for each sewershed must be submitted separately - each submittal must contain data for only one sewershed. The binder must

be labeled on the spine, as well as the front cover, with company name, sewershed, date, investigation method, submittal number, and Clean Water Atlanta logo. Dye testing data must be submitted separately from CCTV data and smoke testing data.

C. The photographs shall be digital pictures in both hard copy and electronic format.

D. Data Collection Methods: Electronic data must be delivered in the prescribed method for uploading to the City's Maintenance Management System. However, the Contractor may use whatever method he chooses to collect the data. The data tables to be populated are described in detail at the end of this section. Electronic copies of blank data tables will be provided to Contractor at the Pre Construction Conference.

E. The Dye Testing Form must be delivered in the format given at the end of this section.

(EXAMPLE)
DYE TESTING REPORT

SERIAL NUMBER_____.

1. UPSTREAM MANHOLE	
2. DOWNSTREAM MANHOLE	
3. DATE _____/_____/_____.	**DYE TESTING TEAM**

PERSONNEL

N

COMMENTS

(EXAMPLE)
DYE TESTING PHOTOS

SERIAL NUMBER_____.

1. UPSTREAM MANHOLE
2. DOWNSTREAM MANHOLE
3. DATE _____/_____/_____. DYE TESTING TEAM

COMMENTS _____

END OF SECTION

SECTION 01540

Security and Safety

PART 1 – GENERAL

1.01 COMPLIANCE WITH CITY'S SECURITY REQUIREMENTS

A. Contractor must comply with City's security requirements for all job sites and Department of Watershed Management (DWM) facilities. The City shall provide copies to the Contractor.

B. Contractor must cooperate with City on all security matters and must promptly comply with any project security arrangements established by the City.

C. It is the Contractor's obligations to comply with all applicable governmental requirements and regulations and to undertake reasonable actions to establish and maintain secure conditions at any jobsite.

1.02 SECURITY PROGRAM

A. The Contractor shall comply with the site security program at all times on City facilities.

B. The Contractor shall maintain the security program throughout the Contract duration.

C. The Contractor and his subcontractors are wholly responsible for the security of their employees, work areas, and for all their material, equipment and tools at all times.

D. The Contractor shall provide the City with a list of 24-hour emergency phone numbers including chain of command.

1.03 ENTRY CONTROL

A. The Contractor shall restrict entry of unauthorized personnel and employees and vehicles onto the Project site.

B. The Contractor shall allow entry only to authorized persons with proper City-approved identification.

1. All Contractors/Subcontractors will be required to have their personnel working at these facilities photographed for an identification (I.D.) badge before they start work.

C. The Contractor shall maintain a current Employee Log of employees performing work on site, as well as a Visitor Log, and make the log available to the City upon request. This log shall be available to the City upon request and submitted to the City as necessary.

D. The Contractor shall require all employees performing activities on site to sign the "Employee Acknowledgment of Project Site Rules Log" included at the end of this Section. All employees, subcontractor employees and lower tier contractor employees will attend a new employee orientation session. Signature of the Employee Log by the employee certifies that the orientation training has been received.

F. The City has the right to refuse access to the site or request that a person or vehicle be removed from the site if found violating any of the safety, security, or conduct rules as outlined.

1.04 BARRICADES, LIGHTS AND SIGNALS

A. The Contractor shall furnish and erect such barricades, fences, lights, danger signals and other precautionary measures for the protection of persons or property and of the work as necessary.

B. The Contractor will be held responsible for all damage to the work and any negligence resulting in injuries due to his failure of erecting adequate barricades, signs, lights and safety provisions as required. Whenever evidence is found of such damage, the Contractor shall immediately remove the damaged portion and replace it at the Contractor's cost and expense.

C. The Contractor's responsibility for the maintenance of barricades, signs and lights shall not cease until the City has been accepted in writing the Project.

1.05 RESTRICTIONS

A. The Contractor shall not allow cameras on site or photographs to be taken, except those that are required to perform the Work in accordance with the Contract Documents or otherwise approved by the City.

1.06 CONTRACTOR SAFETY/HEALTH AND SECURITY PLAN

A. Prior to the performance of any work, the Contractor will prepare and submit a Safety/Health and Security Plan which includes the following minimum requirements:

1. Basic pre-employment background checks for criminal convictions, veracity of previous employment and education statements, driving record and financial responsibility as applicable to the position.

2. Security Education and Awareness training applicable to the job.

3. Standard operating procedures (SOPs) for safeguarding City equipment, supplies and property.

4. Certification requested under the SAFETY Act, Homeland Security Act of 2002, if applicable. Provide date and result as requested.

5. Established process for identification of employees and emergency notification procedures.

6. If applicable, procedures for entry permits and badges. Procedures for returning badges upon termination of employment.

7. Anti-terrorism training provided to employees including the state of national alert with appropriate procedures.

8. Emergency evacuation procedures including accounting for employees at a safe haven.

9. Procedures for reporting post-contract criminal convictions and traffic accidents to the Contract Officer or DWM project manager.

10. SOPs for protecting employees when performing required duties off-site including training for reporting accidents, calling for immediate assistance, job reporting procedures and personal duress codes or alarms.

11. Contact information for the person(s) responsible for implementation and enforcement of Safety/Health and Security rules and regulations for this contract.

12. Safe work procedures for the activities within the Contractor's scope of work.

13. New employee orientation program, which addresses job and site specific rules, regulations and hazards.

14. The Contractor's Drug Free Work Place Policy including substance abuse prevention and testing program.

15. Provisions to protect all of the Contractor's employees, other persons and organizations that may be affected by the work from injury, damage or loss.

16. Demonstration of compliance with current Fed/OSHA, Safety/Health and Security Plan, facility safety program (when applicable), and locally accepted safety codes, regulations and practices.

17. A site-specific emergency action and evacuation plan.

18. Hazard Communication/Right To Know Program.

19. Security procedures for the Contractor's work, tools, and equipment.

20. Capability of providing the Engineer with documentation to show compliance with their plan, plus accidents and investigation reports.

21. Any other contract specific requirements.

B. It is not the City's responsibility to verify the Contractor's safety plan for the adequacy and compliance of the plan.

C. Provide a Job Safety Analysis (JSA) for the scope of work, prior to the start of work.

D. Review of the Contractor's Safety Plan by the City shall not impose any duty or responsibility upon the City for the Contractor's performance of the work in a safe manner.

E. The Contractor shall be fully responsible for the safety and health of its employees, its subcontractors and lower tier contractors during performance of its work.

F. The Contractor shall provide the City with all safety reports, training records, competent person list, and accident reports prepared in compliance with Fed/OSHA and the Project Safety/Health and Security Plan as requested.

1.07 PROJECT SAFETY COORDINATOR

A. The Contractor shall be responsible for the safety of the Contractor's and Engineer's employees, the City's personnel and all other personnel at the site of the work caused by their operations.

B. The Contractor shall have a Project Safety Coordinator, as required by Section GC-18 of the General Conditions.

C. The Project Safety Coordinator shall ensure compliance with all applicable health and safety requirements of all governing legislation.

1.08 PROJECT SAFETY/SECURITY REQUIREMENTS OF THE CONTRACTOR

A. It is the responsibility of the Contractor to ensure that all articles of possible personal or monetary value found by Contractor's employees are turned in to the appropriate City Project Manager.

B. The Contractor shall be responsible for maintaining satisfactory standards of employees' competency, conduct, courtesy, appearance, honesty, and integrity, and shall be responsible for taking such disciplinary action with respect to any employee, as may be necessary.

C. Should the Contractor dismiss employees who have been given access to DWM facilities while the contract is in force, the Contractor will advise the DWM Security office.

D. The City may request the Contractor to immediately remove from the premises and/or dismiss any employee found unfit to perform duties due to one or more of the following reasons:

1. Neglect of duty, absenteeism, security or safety problems and sleeping on the job.

2. Disorderly conduct, use of abusive or offensive language, quarreling, intimidation by words or actions or fighting.

3. Theft, vandalism, immoral conduct of any other criminal action.

4. Selling, consuming, possessing, or being under the influence of intoxicants, alcohol, or illegal substances, which produce similar effects while on duty.

5. Vehicle accident while on City property or driving City equipment. No employee, Contractor, or Subcontractor will be extended privileges to drive City equipment on City property if driving privileges have been withdrawn by the State of residence.

E. All employees shall be required to sign in and out on a designated log sheet.

F. All employees shall be required to wear at all times in an observable location, above the waist, on outer clothing, appropriate photo I. D. badges to be furnished by the Contractor and approved by the City.

G. No one under age sixteen is permitted at work sites after normal working hours. Contractor's employees are allowed on work sites only during the specified hours and only when working on this contract. No Contractor employee will be allowed on work sites when not specifically working on this Contract Ft predetermined times and dates.

1.09 EMPLOYEE ACKNOWLEDGEMENT OF THE PROJECT SITE RULES

A. All employees and agents of the Contractor must read and sign a form to acknowledge understanding of project site rules. A sample log is attached to this Section.

B. By Signing this Employee Log, I acknowledge that I understand and agree to abide by the project rules outlined below. I further acknowledge that I have been briefed on specific hazards, hazardous substances that are on-site and the site emergency action procedure.

C. PROHIBITED ACTIVITIES:

1. Unauthorized removal or theft of CITY property
2. Violation of safety or security rules or procedures
3. Possession of firearms or lethal weapons on jobsite
4. Acts of sabotage
5. Destruction or defacing CITY property
6. Failure to use sanitary facilities
7. Failure to report accidents or job related injuries
8. Being under the apparent influence of drugs, alcohol or other intoxicants or in possession of drugs, alcohol or other intoxicants on the property
9. Wearing shorts or tennis shoes on the jobsite
10. Failure to wear a hardhat/safety glasses as required by law.
11. Gambling at any time on the project
12. Fighting, threatening behavior, or engaging in horseplay on the project
13. Smoking in unauthorized areas on the project
14. Open fire cooking or making unauthorized fires on project property
15. Selling items or raffles without authorization
16. Use of unauthorized cameras on the project
17. Use of radio or television in the construction area
18. Failure to park personal vehicle in authorized parking area
19. Failure to wear designated identification [Site Specific]
20. Failure to use designated gates
21. Use or storage of unauthorized chemicals or substances on site.

D. I have read, understand and agree to abide by the PROJECT SITE RULES. Furthermore, I understand failure to abide by these rules is

grounds for being denied access to the project site. I have received a personal copy for my use and reference.

1.10 OFFICE, MATERIAL AND EQUIPMENT SECURITY

A. The Contractor is solely responsible for the security of any offices or any temporary staging areas utilized by the Contractor. The Contractor is also responsible for the security of his materials, tools, vehicles and equipment on-site at all of the various work locations throughout the City.

EMPLOYEE LOG

BY SIGNING THIS LOG I ACKNOWLEDGE THAT I HAVE READ, UNDERSTAND AND AGREE TO ABIDE BY THE PROJECT RULES OUTLINED ABOVE AND ALL LOCAL, STATE, FEDERAL, AND/OR ANY OTHER CONTRACT OBLIGATIONS THAT MAY APPLY. I FURTHER ACKNOWLEDGE THAT I HAVE BEEN ORIENTATED BY A REPRESENTATIVE OF THE COMPANY AS TO THE SITE SPECIFIC HAZARDS, ANY HAZARDOUS SUBSTANCES THAT I MAY BE EXPOSED TO WHILE ON THE SITE AND THE SITE/COMPANY EMERGENCY ACTION PROCEDURES.

EMPLOYEES (PRINT)	SIGNATURE	COMPANY NAME	DATE
Signature of Company Representative		Date Signed	

VISITOR LOG

BY THE SIGNING OF THIS LOG I ACKNOWLEDGE THAT I HAVE READ, UNDERSTAND AND AGREE TO ABIDE BY THE PROJECT RULES OUTLINE ABOVE. THIS IS NOT FOR A VEHICLE ACCESS PERMIT.

VISITOR'S NAME PRINT	SIGNATURE	COMPANY VISITED	DATE	IN	OUT

END OF SECTION

(This page is intentionally blank)

SECTION 01550

TRAFFIC REGULATION

PART 1 GENERAL

1.01 SCOPE

A. The work specified in this section includes the provision of products, permits, services, procedures and personnel by the Contractor to effect traffic control during the Work.

1.02 TRAFFIC CONTROL MANAGER REQUIREMENTS

A. The Contractor shall designate a qualified individual as the Traffic Control Manager (TCM) who shall be responsible for selecting, installing and maintaining all traffic control devices in accordance with the Drawings and Specifications and the Manual of Uniform Traffic Control Devices (MUTCD). A written resume documenting the experience and credentials of the TCM shall be submitted and accepted by the Engineer prior to beginning any work that involves traffic control. The TCM shall be available on a twenty-four (24) hour basis to perform his duties. If the work requires traffic control activities to be performed during the daylight and nighttime hours it may be necessary for the Contractor to designate alternate TCMs. An alternate TCM must meet the same requirements and qualifications as the primary TCM and be accepted by the Engineer prior to beginning any traffic control duties. The Traffic Control Manager's traffic control responsibilities shall have priority over all other assigned duties.

B. As the representative of the Contractor, the TCM shall have full authority to act on behalf of the Contractor in administering the Traffic Control Plan. The TCM shall have appropriate training in safe traffic control practices in accordance with Part VI of the MUTCD. In addition to the TCM all other individuals making decisions regarding traffic control shall meet the training requirements of the Part VI of the MUTCD.

C. The TCMs shall supervise the initial installation of traffic control devices. The Engineer prior to the beginning of construction will review the initial installation. Modifications to traffic control devices as required by sequence of operations or staged construction shall be reviewed by the TCMs.

PART 2 PRODUCTS

2.01 SIGNS, SIGNALS, AND DEVICES

1. The Contractor shall provide post-mounted and wall-mounted traffic control and

informational signs as specified and required by local jurisdictions.

B. The Contractor shall provide automatic traffic control signals as approved by local jurisdictions.

C. The Contractor shall provide traffic cones and drums, and flashing lights as approved by local jurisdictions.

D. The Contractor shall provide City police officers and certified flaggers and flagger's equipment as required by GDOT.

PART 3 EXECUTION

3.01 PERMITS

1. The Contractor shall obtain permits from authorities having jurisdiction over road closures before closing any road. The Contractor shall use forms provided by authorities having jurisdiction (City of Atlanta Division of Traffic and Transportation, GDOT, etc).

1. The Contractor shall either fax or hand carry permit applications to the City of Atlanta Division of Traffic and Transportation. Permit applications shall indicate the time (in days), length (in feet), the number of lanes, and the purpose of the closure.

C. All permits are approved for operations during off-peak hours 9:00 a.m. to 4:00 p.m. unless special approval is received.

D. Operations between the hours of 6:00 p.m. and 10:00 p.m. and Saturdays and Sundays must be approved by the City

E. Full street closures permits require ninety-six (96) hours advance notice prior to road closure. The following additional information is required prior to approval:

   1. The recommended detour route with signage and Traffic Management Plan as per the Manual of Uniform Traffic Control Devices (MUTCD).

   2. A copy of the resident and/or business notification letters about the closure. The residents/businesses located between the detour route must be notified about the closure at least five (5) business days prior to the proposed closure.

F. The City of Atlanta Division of Traffic and Transportation will return full road closure permit applications to the Contractor with a cover letter to the Fire Chief, Chief of Police, Grady Memorial Hospital, MARTA, and the Atlanta Board of Education. The Contractor shall have received the permit application and cover

letter at least seventy-two (72) hours before commencing road closure activities.

G. Lane closures shall require a minimum of forty-eight (48) hour notice prior to closure. The Contractor shall continuously maintain the safety of the traveling public during lane closures in accordance with the requirements of the MUTCD and as stipulated by public officers. Lane closure permits are issued between 8:30 a.m. and 1:00 p.m. Mondays through Fridays.

H. The City of Atlanta Division of Traffic and Transportation will return the lane closure applications to the Contractor with a cover letter with copies to the Fire Chief, Chief of Police, Grady Memorial Hospital, MARTA, and the Atlanta Board of Education. The Contractor shall have received the permit application and cover letter at least seventy-two (72) hours before commencing lane closure activities.

3.02 PREPARATION OF TRAFFIC CONTROL PLANS

A. The Maintenance of Traffic drawings included with the Contract Documents shall only be considered as a guide and are not intended to contain all the traffic regulation details that may be required by the specifications, permitting agencies and the MUTCD. The Contractor shall develop detailed staging and traffic control plans for performing specific areas of the Work including but not limited to all requirements for certified flaggers, additional traffic control devices, traffic shifts, detours, paces, lane closures or other activities that disrupt traffic flow. The Contractor shall submit these plans in accordance with the Specifications to receive final approvals from permitting agencies and provide any and all required traffic control devices as required by both the permitting agencies and these specifications at no additional cost to the City.

3.03 CONSTRUCTION PARKING CONTROL

A. The Contractor shall control vehicular parking to prevent interference with public traffic and parking, access by emergency vehicles, and City's operations.

B. The Contractor shall monitor parking of construction personnel's vehicles in existing facilities and maintain vehicular access to and through parking areas.

C. The Contractor shall prevent parking on or adjacent to access roads or in non designated areas.

3.04 MAINTENANCE OF TRAFFIC

A. Whenever and wherever, in the Engineer's opinion, traffic is sufficiently congested or public safety is endangered, the Contractor shall furnish uniformed officers to direct traffic and to keep traffic off the highway area affected by construction operations.

B. When the Contract requires the maintenance of vehicular traffic on an existing road, street, or highway during the Contractor's performance of Work that is otherwise provided for on the Drawings and these Specifications, the Contractor shall keep such road, street, or highway open to all traffic and shall provide such maintenance as may be required to safely accommodate traffic. The Contractor shall furnish, erect and maintain barricades, warning signs, flaggers, and other traffic control devices in conformity with the requirements of the Georgia Department of Transportation and other local jurisdictions. The Contractor shall also construct and maintain in a safe condition any temporary connections necessary to ingress into and egress from abutting property or intersecting roads, streets, or highways. The Contractor shall maintain traffic in accordance with any traffic control plans furnished with and made a part of the plan assembly.

C. The Contractor shall make his own estimate of all labor, materials, equipment, and incidentals necessary for providing the maintenance of traffic as specified in this section.

D. Unless specified in the Drawings or these Specifications and subject to the approval of the City, the cost of maintaining traffic specified in this section shall be included under Bid Item - Traffic Regulation.

3.05 UNIFORMED POLICE OFFICER FOR TRAFFIC CONTROL

A. The Contractor shall provide uniformed police officers to regulate traffic when construction operations encroach on active public traffic lanes, as approved by the Engineer.

B. Officers will be currently employed by a local jurisdiction, be in full uniform and have full arrest power while working.

C. Officers will be employed and paid by the Contractor.

D. It is the officers' responsibility to assist in the direction of traffic within the construction site.

3.06 FLAGGERS

A. The Contractor shall provide Georgia Department of Transportation (GDOT) certified trained and equipped flaggers to regulate traffic when construction operations or traffic encroach on public traffic lanes.

3.07 FLASHING LIGHTS

A. The Contractor shall use flashing lights during hours of low visibility to delineate traffic lanes and to guide traffic.

3.08 HAUL ROUTES

A. The Contractor shall consult with authorities and establish public thoroughfares to be used for haul routes and site access.

B. The Contractor shall confine construction traffic to designated haul routes.

C. The Contractor shall provide traffic control at critical areas of haul routes to regulate traffic and minimize interference with public traffic.

3.09 ROAD CLOSURES ON CITY ROADS

A. No street, road or highway shall be closed without the permission of the Owner of any street, road or highway and the fire department having jurisdiction. Prior to closing a street, road or highway, signs shall be posted for a minimum of seven (7) days prior to actual closing, forewarning of the imminent closing. The City shall determine the information to be placed upon the signs by the Contractor. Where traffic is diverted from the Work, the Contractor shall provide all materials and perform all work for the construction and maintenance of all required temporary roadways, structures, barricades, signs and signalization.

B. To obtain approval to close a road or street maintained by the City, the Contractor shall proceed as follows:

1. The Contractor shall obtain approval of his traffic plan from the Engineer unless a traffic plan approved by the Engineer is included in the Drawings. The traffic plan must be in accordance with the requirements of the Georgia Department of Transportation and the City of Atlanta.

2. The Contractor shall obtain a utility permit.

3. The Contractor shall apply in writing to the City and obtain a permit to close the road on a specific date. Routine permit approval by the City requires from one (1) to two (2) weeks depending on when the application is received.

4. The Contractor shall obtain a permit from the City before posting closure signs. Signs must be posted for seven (7) days prior to the first day of closure. Signs shall be acceptable to the Engineer.

5. Emergency road closures will be handled by the Engineer.

3.10 PROCEDURES FOR TRAFFIC DETOUR ROUTE PLAN

A. The Contractor shall provide a sketch map showing his traffic detour route plan to the Engineer. The sketch map need not be drawn to scale but should resemble,

as closely as possible, the actual location. The sketch map shall be drawn in a manner so as to provide emergency agencies a better understanding of the detour for quick response. The sketch map shall include directional arrows showing the flow of traffic.

B. "Road Closed Ahead" signs shall be erected before the start point of the detour indicating the name of the street closed.

C. Detour signs with appropriate directional arrows shall be erected at every intersection along the detour route until the end of the detour, when the traffic is back to the original street.

D. The Contractor shall erect an "End Detour" sign at the end of the detour.

E. Each detour and "End Detour" sign shall be accompanied by an accessory plate indicating the name of the street being detoured.

F. The Contractor shall apply appropriate traffic control measures in accordance with the requirements of the MUTCD and the City of Atlanta Department of Public Works.

3.11 BARRICADES AND WARNING SIGNS

A. The Contractor shall furnish, erect, and maintain all barricades and warning signs for hazards necessary to protect the public and the Work. When used during periods of darkness, such barricades, warning signs and hazard markings shall be suitably illuminated or reflectorized.

B. For vehicular and pedestrian traffic, the Contractor shall furnish, erect, and maintain barricades, warning signs, lights, and other traffic control devices in conformity with the requirements of the Georgia Department of Transportation and the City of Atlanta Department of Public Works.

C. The Contractor shall furnish and erect all barricades and warning signs for hazards prior to commencing Work which requires such erection and shall maintain the barricades and warning signs for hazards until their dismantling is directed by the Engineer.

3.12 REMOVAL

A. The Contractor shall remove equipment and devices when no longer required and repair damage caused by installation.

3.13 RIGHT OF WAY MANUAL

A. Included at the end of this Section are copies of the title page and pages 42 through and including page 52 from the City's Right-of Way Manual. These pages include Appendices A, B and C which indicate street designations and Appendix D which covers restrictions for working within the City's right of way. These restrictions shall also apply to GDOT right of ways.

+ + + END OF SECTION 01550 + + +

SECTION 01580

Project Identification and Signs

PART 1 – GENERAL

1.01 SCOPE

A. The work under this Section requires the Contractor to furnish, utilize and maintain custom vinyl magnetic vehicle signs, each to be 24-inches long by 12-inches high, minimum.

1.02 DESIGN

A. The Contractor shall submit to the Engineer for approval a scale drawing showing the graphic design, style of lettering, and colors, configured to match the design issued by the City Public Involvement (PI) Office. The PMT and/or PI Office will provide the art ready templates for all CWA signage at the Public Information Kick-off Meeting described in Section 01351.

PART 2 – PRODUCTS

2.01 MATERIALS

A. Magnetic Vehicle Signs

1. Durable nylon
2. 100% magnetic surface with strong magnetic cling
3. Minimum Size: 24-inches by 12-inches
4. Professional appearance with fade resistant color printed layout

B. Yard Signs

1. Corrugated plastic panel suitable for exterior use with graphic print on both sides.
2. Single zinc coated or galvanized metal wire stand frame.
3. Minimum size 24 inches by 36 inches.

PART 3 – EXECUTION

3.01 GENERAL

A. Magnetic Vehicle Signs

1. Contractor shall utilize the magnetic signs for all vehicles performing work under this Contract while the vehicles are on the site or otherwise engaged in the Contract Work.

2. Contractor shall place the magnetic signs on each vehicle in a high visibility location. If the signs are to be placed on the sides of vehicles, two signs shall be utilized per vehicle (one sign per side). If the signs are to be placed on the rears of vehicles, one sign per vehicle shall be acceptable.

3. Contractor shall replace the signs during the project as necessary or as directed by the Engineer.

B. Yard Signs

1. Contractor shall install and maintain yard signs as directed by the City Public Information Officer (PIO).

3.02 MAINTENANCE

A. Contractor shall maintain all signage in good condition throughout the Contract period at no additional cost to the City.

END OF SECTION

SECTION 01590

Field Offices

PART 1 - GENERAL

1.01 SCOPE

A. The Contractor shall provide all temporary facilities and necessary staff personnel for the proper completion of the Work as specified.

B. Maintain temporary facilities in proper and safe condition through the progress of the Work. In the event of loss or damage, immediately make all repairs and replacements necessary subject to approval of the Engineer and at no additional cost to City. At completion of the Work remove all such temporary facilities or as directed by the Engineer.

1.02 REQUIREMENTS

A. General

1. The materials, equipment, and furnishings provided under this Section shall be new, and shall meet all the applicable codes and regulations.

2. Make all provisions, and pay all costs of furnishing, installation, maintenance, professional services, permit fees, property leases, and site work including all utilities for the temporary facilities.

B. Field Personnel

1. The Contractor's administrative field office shall be maintained at a staffing level sufficient to plan, coordinate and have authority to promptly execute the Work on site with the corresponding City personnel. At a minimum, the Contractor's project manager, public information officer, safety officer, superintendent and one administrative support person shall occupy and be available at the field office each workday.

C. Field Office Construction

1. Temporary mobile/modular field office buildings shall be structurally sound, weather tight, with floors raised above ground. Mobile/modular buildings shall comply with GA-DCA/SBCC/ADA requirements, and shall be G E – Modular Space, Williams-Scottsman or equal.

2. Temporary field office buildings shall have temperature transmission resistance compatible with occupancy and storage requirements. The office buildings shall be properly skirted as approved by the Engineer.

1.03 CONTRACTOR'S FACILITIES

A. Contractor shall submit a plan of the temporary field offices buildings layout to Engineer for approval within 15 days of the Notice to Proceed. Contractor's facilities, for purposes of this Section, is defined to include but is not limited to its administrative field office located in the City's Area Compound and its Contractor's operational field office to be located within a five (5) mile radius of the administrative field office Area Compound. Both field offices shall have a first aid station and be centrally located to the Work. The Contractor's operational field office shall have a storage facility (for both materials and equipment). Insufficient, inadequate, improper facilities or equipment shall be brought to acceptable condition or shall be removed from either site.

B. The Contractor's administrative field office shall include a dedicated meeting/conference room for hosting bi-weekly progress or other meetings with City and Engineer representatives. Size the room to comfortably seat a minimum of ten (10) people. Proper ventilation, temperature control and lighting are required, and shall be provided to the satisfaction of the Engineer.

C. The location of stationary and mobile equipment shall be subject to the Engineer's approval.

D. First Aid Station: Contractor shall provide a suitable first aid station at the administrative field office and the Contractor's operational field office. Each station shall be equipped with all facilities and medical supplies necessary to administer emergency first aid treatment. Contractor shall have standing arrangements for the removal and hospital treatment of any injured person. The information reflecting this arrangement shall be clearly posted for easy visibility. All first aid supplies and emergency ambulance service shall be made available by the Contractor to the Contractor's, City's and Engineer's personnel.

1.04 ENGINEER'S FACILITIES (Not Used)

1.05 COMMUNICATIONS SERVICES

A. General

1. Make all necessary arrangements for outside telephone and internet access service to Contractor's administrative field office

and Contractor's operational field office. All portions of the communication system shall be maintained in good working condition.

2. At a minimum, furnish two telephone lines to the Contractor's administrative field office and Contractor's operational field office. One will be used for a dedicated facsimile machine.

3. All expenditures for installation costs of hardware, lines, line extensions, service charges, and recurring service charges for telephone and internet access service shall be included in the unit price for the Contractor's temporary facilities item.

1.06 PARKING FACILITIES

A. General

1. Provide parking, either graveled or paved, adjacent to Contractor's administrative field office and Contractor's operational field office, without necessitating jockeying of cars, for a minimum of 2 cars for the use of City's or Engineer's personnel when visiting the Contractor's administrative field office or Contractor's operational field office. The parking surfaces shall be promptly and adequately maintained by the Contractor for the duration of the Contract.

2. Additional parking facilities required by the Contractor shall be the Contractor's responsibility.

3. The contractor will return the parking surface to its original condition.

1.07 FACILITIES FOR PROJECT CONTROL TOOLS

A. The Contractor shall have adequate computer system capability in its administrative field office and Contractor's operational field office facilities to connect to and use the City's Project Control Tools (refer to Section 01350). The connection method shall be based upon the physical connections availability at the various field and office locations. The priority preference for these connections is: DSL, Cable Modems, and if necessary T1 connections. No dial-up modems will be allowed. The monthly charges for these services shall be paid by the Contractor for the duration of the contract. Costs shall be included in the unit price item for the Contractor's temporary facilities.

B. The Contractor's connection computer(s) must have a minimum operating system of Windows 2000 or greater, 1.8 Hz speed with 256mb RAM. The Internet Explorer web browser must be version 5.5 or greater. The

Contractor's printers must not be USB connection printers. The printer(s) must be a dedicated printer, HP LaserJet compatible.

C. No partial payment for the Contractor's temporary facilities unit price item will be approved until all connections are provided and installed to the satisfaction of the City's Project Controls Support Group.

1.08 SECURITY AND MAINTENANCE

A. General

1. Provide periodic indoor and outdoor maintenance and cleaning for temporary structures, furnishings, equipment and services as specified herein above.

2. Provide racks and files for Project Record Documents to be turned over to the City at the completion of the project.

PART 2 - PRODUCTS (NOT USED)

PART 3 - EXECUTION

3.01 PREPARATION

A. Fill and grade sites for temporary structures to provide surface drainage.

3.02 INSTALLATION

A. Construct temporary administrative field office, Contractor's operational field office, first aid station, and storage facilities on proper foundations and complete connections for utility all services.

B. Locate temporary administrative field office facilities at an Area Compound location provided by the City and locate Contractor's operational field office within a five (5) mile radius of the administrative field office Area Compound, as approved by the Engineer.

C. Determine the need for temporary utility services, including utility services for Contractor's administrative field office, Contractor's operational field office and first aid station, and make all arrangements with utility companies and governmental agencies to secure such services. Temporary utility services shall be furnished, installed, connected, and maintained by Contractor in a workmanlike manner, and shall be removed in like manner prior to final project acceptance.

3.03 MAINTENANCE AND CLEANING

A. At a minimum, repair and clean the offices, parking areas and access routes and provide complete professional janitorial services, including toilet paper and paper towels, in the Contractor's administrative field office and Contractor's operational field office. Contractor's administrative field office and Contractor's operational field office cleaning shall be done to the satisfaction of the Engineer. These services shall include sweeping, vacuuming, dusting, emptying of trash, cleaning of washbasins, bathroom and shower facilities, mopping and waxing of all floors. Contractor shall also provide for exterminating services of the offices if requested by the Engineer.

3.04 REMOVAL

A. Remove or discontinue temporary field offices, contents and services at a time when no longer needed.

END OF SECTION

[This page intentionally left blank]

SECTION 01610

TRANSPORTATION AND HANDLING

PART 1 GENERAL

1.01 SCOPE

A. The Contractor shall provide transportation of all equipment, materials and products as required under this Contract to the Work site. In addition, the Contractor shall provide preparation for shipment, loading, unloading, handling and preparation for installation and all other work and incidental items necessary or convenient to the Contractor for the satisfactory prosecution and completion of the Work.

B. All equipment, materials and products damaged during transportation or handling shall be repaired or replaced by the Contractor at no additional cost to the City prior to being incorporated into the Work.

1.02 TRANSPORTATION

A. All equipment shall be suitably boxed, crated or otherwise protected during transportation.

B. Where equipment will be installed using existing cranes or hoisting equipment, the Contractor shall ensure that the weights of the assembled sections do not exceed the capacity of the cranes or hoisting equipment.

C. Small items and appurtenances such as gauges, valves, switches, instruments and probes which could be damaged during shipment shall be removed from the equipment prior to shipment, packaged and shipped separately. All openings shall be plugged or sealed to prevent the entrance of water or dirt.

1.03 HANDLING

A. All equipment, materials and products shall be carefully handled to prevent damage or excessive deflections during unloading or transportation.

B. Lifting and handling drawings and instructions furnished by the manufacturer or supplier shall be strictly followed. Eyebolts or lifting lugs furnished on the equipment shall be used in handling the equipment. Shafts and operating mechanisms shall not be used as lifting points. Spreader bars or lifting beams shall be used when the distance between lifting points exceeds that permitted by standard industry practice.

C. Under no circumstances shall equipment or products such as pipe, structural steel, castings, reinforcement, lumber, piles, poles, etc., be thrown or rolled off of trucks onto the ground.

D. Slings and chains shall be padded as required to prevent damage to protective coatings and finishes.

PART 2 PRODUCTS

(NOT USED)

PART 3 EXECUTION

(NOT USED)

+ + + END OF SECTION 01610 + + +

SECTION 01611

Storage and Protection

PART 1 – GENERAL

1.01 SCOPE

A. The work under this Section includes, but is not necessarily limited to, the furnishing of all labor, tools and materials necessary to properly store and protect all materials, equipment, products and the like, as necessary for the proper and complete performance of the Work.

B. The Contractor shall store materials, supplies, and equipment at the site in such orderly fashion and in such locations as approved by the Engineer that will not unduly interfere with the progress of the Work or the work of any other contractors, or the activities of City personnel.

1.02 STORAGE AND PROTECTION

A. Storage:

1. Maintain ample space for foot traffic at all times, except as otherwise approved by the Engineer.

2. All property damaged by reason of storing of material shall be properly replaced at no additional cost to the City.

3. Packaged materials shall be delivered in original unopened containers and so stored until ready for use.

4. All materials shall meet the requirements of these Specifications at the time that they are used in the Work.

5. Store products in accordance with manufacturer's instructions.

B. Protection:

1. Use all means necessary to protect the materials, equipment, and products of every section before, during and after installation and to protect the installed work and materials of all other trades.

2. All materials shall be delivered, stored, and handled to prevent the inclusion of foreign materials and damage by water, breakage, vandalism, or other causes.

3. Substantially constructed weathertight storage sheds, with raised floors, shall be provided, and maintained as may be required to adequately protect those materials and products, which may require protection from damage by the elements, stored on the site.

C. Replacements: In the event of damage, immediately make all repairs and replacements necessary for the approval of the Engineer and at no additional cost to the City.

D. Equipment and products stored outdoors shall be supported above the ground on suitable wooden blocks or braces arranged to prevent excessive deflection or bending between supports. Items such as pipe, structural steel and sheet construction products shall be stored with one end elevated to facilitate drainage.

E. Unless otherwise permitted in writing by the Engineer, building products, and materials such as cement, grout, plaster, gypsumboard, particleboard, resilient flooring, acoustical tile, paneling, finish lumber, insulation, wiring, etc., shall be stored indoors in a dry location. Building products such as rough lumber, plywood, concrete block, and structural tile may be stored outdoors under a properly secured waterproof covering.

F. Tarps and other coverings shall be supported above the stored equipment or materials on wooden strips to provide ventilation under the cover and minimize condensation. Tarps and covers shall be arranged to prevent ponding of water.

1.03 EXTENDED STORAGE

A. In the event that certain items of major equipment such as air compressors, pumps, and mechanical aerators have to be stored for an extended period of time, the Contractor shall provide satisfactory long-term storage facilities that are acceptable to the Engineer. The Contractor shall provide all special packaging, protective coverings, protective coatings, power, nitrogen purge, desiccants, lubricants, and exercising necessary or recommended by the manufacturer to properly maintain and protect the equipment during the period of extended storage.

END OF SECTION

SECTION 01720

Record Documents

PART 1 – GENERAL

1.01 SCOPE

A. The work under this Section includes, but is not necessarily limited to, the compiling, maintaining, recording, and submitting of project record documents as herein specified.

B. Record documents include, but are not limited to:

1. Drawings

2. Specifications

3. Change orders and other modifications to the Contract

4. Engineer field orders or written instructions, including Requests for Information (RFI) and Clarification Memorandums

5. Reviewed shop drawings, product data and samples

6. Test records

7. As-built drawings and/or maps, indicating the locations and types of work performed (manhole asset ID numbers clearly shown where appropriate). Position survey coordinates, top of manhole and invert elevations shall be indicated on the drawing for all manholes and/or sewers which are newly constructed, replaced or adjusted to grade. Where service laterals are rehabilitated or replaced (whether partial or complete to property line) indicate approximate location on drawing, as well as method of rehabilitation/repair. As-built pipe diameters and materials shall also be indicated.

8. Map corrections - printed map marked up illustrating the approximate position of any unmapped manholes and sewers discovered (no survey required).

9. Geographic Information System (GIS) data – updated GIS data set indicating the as-built position and attributes for all replaced and rehabilitated sewer mains, manholes and lateral piping.

C. The Contractor shall maintain a current set of Record Drawings and GIS data on the Project site throughout the Contract Time.

1.02 MAINTENANCE OF DOCUMENTS AND SAMPLES

A. Storage:

1. Store documents and samples in the Contractor's field office, apart from documents used for construction

2. Provide files and racks for storage of documents

3. Provide locked cabinet or secure storage space for storage of samples

B. File documents and samples in accordance with format of these Specifications

C. Maintenance:

1. Maintain documents in a clean, dry, legible condition and in good order.

2. Do not use record documents for construction purposes.

3. Maintain one copy of all record documents at the site.

D. Make documents and samples available at all times for inspection by Engineer.

E. Failure to maintain the Record Documents in a satisfactory manner may be cause for withholding payment.

1.03 QUALITY ASSURANCE

A. Unless noted otherwise, Record Drawings and corresponding GIS data shall provide dimensions, distances, coordinates to the nearest 0.1 foot in North American Datum of 1983 (1986 adjustment) Georgia State Plane West 1002 System format. All coordinate values shall be provided as grid coordinates in US Survey Feet.

B. Unless noted otherwise, Record Drawings and corresponding GIS data shall provide elevations to the nearest 0.01 foot referenced to the North American Vertical Datum of 1988 (NAVD88) format. All coordinate values shall be provided as grid coordinates in US Survey Feet.

C. GPS data shall be collected using eGPS Solutions or equivalent internet-based real time GPS network. The network shall provide continuous error

correction and accuracy which meets or exceeds the requirements of Section 1.07 Data Accuracy.

D. Any transformation or adjustment necessary to reproject surveyed coordinates to the Reference Coordinate System will be the responsibility of the Contractor.

E. The Contractor shall employ a Professional Land Surveyor (PLS) licensed in the State of Georgia to prepare the Record Drawings from a post-construction, field survey of all manholes or sewers newly constructed, replaced or otherwise adjusted in position or elevation. Additionally, the shall submit the corresponding GIS data accordingly to indicate the as-built condition and GIS data attributes of these structures and pipelines. Replacement methods include open cut, pipe-bursting, push-bursting and horizontal directional drilling. Lining, point repairs, abandonment and removal of sewer mains or manholes is considered rehabilitation work. A post construction survey is not required for these types of rehabilitation; however, the GIS data attributes shall be updated to indicate the physical as-built condition.

1.04 DATA ACCURACY

A. High Resolution: For all sanitary sewer structures, the equipment and means used by Contractor must generate the position of points with a minimum accuracy of three (3) centimeters horizontal and three (3) centimeters vertical. To determine the accuracy obtained, Contractor's GPS system will be calibrated daily against a known point (monuments) prior to beginning work and when the work is completed. The Contractor shall submit a report to the Engineer certifying calibration was accomplished and indicating the reference system. Data delivered to the Engineer arising from the GPS survey shall be certified by a Professional Land Surveyor. When the GPS equipment cannot be set directly on the point, conventional surveying methods will be used to establish the position to the stated level of accuracy.

B. Calibration shall be carried out at least on a daily basis in accordance with the GPS equipment manufacturer's instructions. Additional calibrations may be required during the course of the working day for large fluctuations of temperature and/or humidity, also in accordance with the manufacturer's instructions and tolerances. The Contractor shall submit a report to the Engineer certifying calibration was accomplished and indicating the reference system.

1.05 INTERFERENCE

A. A GPS position is required for all newly constructed, replaced or adjusted sanitary point structures regardless of the overhead conditions or other

nearby obstructions which may interfere with satellite signals, at no additional cost. In the event coverage conditions do not allow all positions to be obtained by setting directly over the point, rangefinders or other conventional surveying methods may be used to obtain the position of the point(s).

1.06 RECORDING

A. Label each document "PROJECT RECORD" in neat, large printed letters.

B. Recording:

1. Record information concurrently with construction progress.

2. Do not conceal any work until required information is recorded.

1.07 RECORD DRAWINGS

A. Record Drawings shall be reproducible, shall have a title block indicating that the drawings are Record Drawings, the name of the company preparing the Record Drawings, and the date the Record Drawings were prepared. The Contractor will be provided paper sepias of the Drawings, or it may elect to provide reproducible drawings via another method. Reproducible shall be defined as being translucent so as to allow a blueline print to be produced.

B. Legibly mark drawings to record actual construction, including:

1. All Construction:

a. Changes of dimension, diameter, or material and detail

b. Location and type of work performed on each manhole or sewer segment (indicate asset ID numbers)

c. Changes made by Requests for Information (RFI), field order, clarification memorandums or by change order

d. Details not on original Drawings

e. The distance (length) between manhole covers on pipe segments where work was performed.

2. Structures:

a. Position coordinates, as well as invert and top elevations of manholes where manholes or sewers have been newly constructed, replaced or adjusted/raised to grade.

1.08 SPECIFICATIONS

A. Legibly mark each section to record:

1. Manufacturer, trade name, catalog number, and supplier of each product and item of equipment actually installed

2. Changes made by Requests for Information (RFI), field order, clarification memorandums, or by change order

1.09 GIS DATA

A. Coordinate and attribute data shall be provided in both electronic and hard copy format at the completion of each sewer-shed, but not less than monthly. The hard copy data must be submitted for approval by the Engineer. Electronic data will not be accepted without hard copy data. Each submittal must be numbered according to the numbering system outlined in Specification Section 01350.

B. The hard copy data shall include a cover letter and printed spreadsheet that corresponds to the electronic data submitted. If the survey work is performed by a subcontractor, the cover letter shall provide certification of data accuracy by a Professional Land Surveyor (PLS) licensed in the State of Georgia. If the survey work is performed by the prime Contractor, the cover letter shall provide certification of data accuracy by a Professional Land Surveyor (PLS) licensed in any State in the United States of America. The hard copy data must be bound, with the PLS seal placed on the cover letter; OR, the hard copy data may be submitted unbound, with the PLS seal placed on each and every sheet of unbound data submitted.

C. The attached GPS Certification Form shall be signed and sealed by a Registered Land Surveyor in Georgia and submitted for each sewershed.

D. The electronic data table submittal shall include four completed worksheets to form a workbook in Microsoft Excel format containing position survey data and physical attributes of the replacement and rehabilitation work. All pipe material, pipe shape and pipe liner code values shall be provided in accordance with in Section 02752 - Attachment C. Numerical value measurement data precision shall be 1/1000 or three decimal places. Each data worksheet shall include individual data records arranged in template formats and header values conforming to examples provided below;

Manhole Replacement or Rehabilitation Worksheet:

PointGISID	X_Coord_US	Y_Coord_US	Z_Elev_US	REHAB_METH	Comments	Install Date	Scope Status
23040113201	2204663.500	1349506.320	859.950	Replace MH Frame and Cover	Replaced Vented Cover & Installed Solid Cover	mm/dd/yyyy	Original scope completed as designed

Pipeline Rehabilitation Worksheet (Use for sewer main open cut replacement, pipe-bursting, push-bursting, horizontal directional drilling or lining):

PipeGISID	PipeDia	PipeWidth	PipeHeight	PipeGuage	PipeShape	PipeUSDpth	PipeDSDpth
23040113201T23040116501	12.000	0.000	0.000	1.125	C	8.600	15.840

Cont'd

PipeMatl	X_Coord_US	Y_Coord_US	Z_Elev_US	US_Pipe_Elev	X_Coord_DS	Y_Coord_DS	Z_Elev_DS
PE	2204663.500	1349506.320	859.950	851.350	2204313.580	1349469.870	864.350

Cont'd

DS_Pipe_Elev	Length	Slope	REHAB_METH	COMMENTS	Install Date	Scope Status
848.510	351.813	0.008072	PB		mm/dd/yyyy	Original Scope completed as designed

Point Repair Rehabilitation Worksheet:

PipeGISID	PipeDia	PipeWidth	PipeHeight	PipeGuage	PipeShape	PipeMatl
23040113201T23040116501	12.000	0.000	0.000	1.125	C	VC
23040113301T23040113401	0.000	8.000	10.000	0.000	C	CO

Cont'd

REHAB_METH	DISTFRMUSMH	PR_LENGTH	PR_MATERIAL	COMMENTS	Install Date	Scope Status
External	12.700	4.500	VC		mm/dd/yyyy	Rehab scope method revised from original scope
Internal	13.000	6.000	PVC		mm/dd/yyyy	Original scope completed as designed

Lateral Rehabilitation Worksheet:

PipeGISID	Address	ZIP	Pipe Matl	DIST FRM USMH	Clock Pos	REHAB METH	New CO	Comments	Install Date	Scope Status
23040113201T23040116501	31 Honour Circle, NE	30305	PVC	189.000	9.000	REP	N		mm/dd/yyyy	Work added to original scope
23040113301T23040113401	400 Atlanta Avenue, SW	30309	CPP	13.000	3.000	Lining	Y		mm/dd/yyyy	Original scope completed as designed
13040113901T13044011801	230 Peachtree Street, NE	30303	CPP	89.000	9.000	Top Hat	N		mm/dd/yyyy	Original scope completed as designed

1.08 SUBMITTAL

A. At work assignment or contract closeout (whichever comes first), the Contractor shall submit two copies of Record Documents to the Engineer.

B. The submittal shall include a transmittal letter, in duplicate, containing;

1. date
2. project title and number
3. contractor's name and address
4. title and number of each record document and
5. signature of Contractor or Contractor's authorized representative.

C. Additionally, the Contractor shall edit the digital PDF(s) files furnished for each sewershed to include all changes based upon actual field conditions. The Contractor shall submit marked up map(s) showing the position of unmapped and incorrectly positioned manhole(s) and/or pipelines discovered during the work. All map(s) shall be marked up with red text and delivered to the Engineer upon the completion of each sewershed. Supplemental sketches shall also be provided in red text, as necessary to clearly depict the actual site conditions including, but not limited to congested areas and established access roads. A legend shall be added to the title block indicating the symbology, color coding and descriptions. The date, the words “As-Built” and company name shall also be included in the title block.

END OF SECTION

ATTACHMENT A

CLEAN WATER ATLANTA

GPS CERTIFICATION FORM

The purpose of this form is to provide the City of Atlanta with additional GPS/Survey information necessary to maintain the GIS system. This form should be completed for each sewershed and submitted with the Certified GPS.

Name of Sewershed:	Contractor Name: Contact Number:	Surveyor Name: Contact Number:
Brief description of survey equipment used: (Manufacturer, Model No., Age)		

Reference Coordinate System used

a. Horizontal

- Datum _____
- Adjustment _____
- Coordinate System _____
- Unit of Measure _____

b. Vertical

- Datum _____
- Geoid Model _____
- Unit of Measure _____

c. Geodetic monuments used or name of network RTK service _____

_____

d. Scale factors for Conventional Survey _____

_____

e. If calibration or transformation was applied, list parameters _____

_____

f. Are coordinates Grid or Ground? _____

_____ _____

Signature and Seal of Surveyor Date

(This page is intentionally blank)

SECTION 01900

SEISMIC REQUIREMENTS

PART 1 GENERAL

1.01 SCOPE

A. This section establishes the minimum seismic design requirements for mechanical and non-structural components required to complete the Work.

B. The Contractor shall be responsible for the seismic requirements specified including the conformance of work for all subcontractors, manufacturers and suppliers with regard to the indicated and specified seismic requirements.

1.02 REFERENCES

A. American Society of Civil Engineers:

1. ASCE 7: Minimum Design Loads for Buildings and Other Structures.

B. American Petroleum Institute:

1. STD 650: Welded Steel Tanks for Oil Storage

C. American Society of Mechanical Engineers:

1. B 31: Code for Pressure Piping

2. Boiler and Pressure Vessel Code

D. International Code Council (ICC):

1. International Building Code

E. Manufacturers Standardization Society of the Valve and Fitting Industry:

1. SP-58: Pipe Hangers and Supports - Materials, Design and Manufacture

1.03 DEFINITIONS

A. Components are defined as systems, equipment, parts, or other elements, including supporting structures and attachments.

B. The reference building code is defined as the building code cited on the structural drawings or specified herein for the design of the basic structure.

C. The specified seismic criteria is defined as the seismic criteria cited on the structural drawings or specified herein for the design of the basic structure.

1.04 SEISMIC DESIGN REQUIREMENTS

A. Refer to structural drawings for seismic requirements and also conform to the requirements specified herein.

B. Non-structural components shall be designed and constructed to resist the seismic forces and displacements based upon ASCE 7, the reference building code, and the specified seismic criteria. In the case of conflict the more stringent requirements shall govern.

C. The interrelationship of components and their effect on each other shall be such that the failure of one component shall not cause the failure of any other component.

D. Components shall be anchored to the building structure to transfer seismic forces. Connections shall be bolted, welded or otherwise positively anchored to the structure. Anchorage shall not rely on friction for force transfer.

E. Exceptions: Exemption from the requirements for seismic analysis and design are permitted only to the extent permitted in the reference code.

1.05 SUBMITTALS

A. Submittals shall be made in accordance with the requirements of the General Condition of the Contract Documents. In addition, the following specific information shall be provided:

1. Certification signed and sealed by a Professional Structural Engineer holding current registration in the State of Georgia stating that all systems, equipment and other elements, including supporting structures, attachments and connections are designed to withstand the required seismic forces and displacements.

2. Codes and specifications to which structural design conforms.

1.06 SPECIFIC COMPONENTS

A. Piping Systems: Support and bracing of piping systems shall account for the weight and hydrodynamic effects of the contents.

B. Pressure Piping: Pressure piping support and bracing shall conform to ASME B 31 in addition to the force and displacement requirements of the reference code.

PART 2 PRODUCTS

(NOT USED)

PART 3 EXECUTION

(NOT USED)

+ + + END OF SECTION 01900 + + +

SECTION 02000

SITE WORK

PART 1 GENERAL

1.01 SCOPE

A. This section outlines site work requirements that are applicable to all site work operations. Refer to specification sections for specific product and execution requirements.

1.02 QUALITY ASSURANCE

A. Comply with all applicable local, state, and federal requirements regarding materials, methods of work, and disposal of excess and waste materials.

B. Obtain and pay for all required inspections, permits, and fees. Provide notices required by governmental authorities.

1.03 PROJECT CONDITIONS

A. Locate and identify existing underground and overhead services and utilities within contract limit work areas. Provide adequate means of protection of utilities and services designated to remain. Repair utilities damaged during site work operations at Contractor's expense.

B. Arrange for disconnection or disconnect and seal or cap all utilities and services designated to be removed before start of site work operations. Perform all work in accordance with the requirements of the applicable utility company or agency involved.

C. When uncharted or incorrectly charted underground piping or other utilities and services are encountered during site work operations, notify the Engineer and the applicable utility company immediately to obtain procedure directions. Cooperate with the applicable utility company in maintaining active services in operation.

D. Locate, protect, and maintain bench marks, monuments, control points and project engineering reference points. Reestablish disturbed or destroyed items at Contractor's expense.

E. Perform site work operations and the removal of debris and waste materials to assure minimum interference with streets, walks, and other adjacent facilities.

F. Obtain governing authorities' written permission when required to close or obstruct street, walks and adjacent facilities. Provide alternate routes around closed or obstructed traffic ways when required by governing authorities.

G. Control dust caused by work. Dampen surfaces as required. Comply with pollution control regulations of governing authorities.

H. Protect existing buildings, paving, and other services or facilities on site and adjacent to the site from damage caused by site work operations. Cost of repair and restoration of damaged items at Contractor's expense.

I. Protect and maintain street lights, utility poles and services, traffic signal control boxes, curb boxes, valves and other services, except items designated for removal. Remove or coordinate the removal of traffic signs, parking meters and postal mail boxes with the applicable governmental agency. Provide for temporary relocation when required to maintain facilities and services in operation during construction work.

J. Preserve from injury or defacement all vegetation and objects designated to remain.

PART 2 PRODUCTS

2.01 MATERIALS AND EQUIPMENT

A. Materials and equipment: As selected by Contractor, except as indicated in contract documents.

PART 3 EXECUTION

3.01 GENERAL

A. Examine the areas and conditions under which site work is performed. Do not proceed with the work until unsatisfactory conditions are corrected.

B. Consult the records and drawings of adjacent work and of existing services and utilities which may affect site work operations.

+ + + END OF SECTION 02000 + + +

SECTION 02020
USE OF EXPLOSIVES

PART 1 GENERAL

1.01 SCOPE

A. This section covers the use of explosives and blasting in connection with the construction of the Project. Limit the use of explosives in the works to the practicable minimum by utilizing mechanical means of excavation to the maximum feasible extent. Blasting shall be limited as approved by the Engineer.

1.02 DEFINITIONS

A. Controlled blasting is excavation of rock in which the blast hole size, spacing, depth and burden, and the charge size, depth and delay sequence are carefully controlled to excavate the rock to the required limits. Controlled blasting minimizes over break and fracturing of the rock beyond the design lines.

1.03 GENERAL

A. Perform blasting only with a permit from the appropriate jurisdictional agency. Necessary permits include an Explosives License issued by the Georgia Safety Fire Commissioner, and users' permits obtained from Fulton County and from the City of Atlanta. Obey all local, State, Federal and other Governmental regulations applying to transportation, handling, storage and use of explosives, including the requirements of the Bureau of Fire Prevention of the City of Atlanta, Fulton County and the State of Georgia, and applicable regulations of the Occupational Safety and Health Administration.

B. Perform blasting operations in trenches, shafts and other open excavations only during daylight hours. Perform blasting operations in the tunnel only during the hours 7:00 a.m. to 10:00 p.m. No blasting shall be performed on Saturdays, Sundays or on the public holidays observed by the City and listed in the Special Conditions. If an emergency prevents a blast being fired during the permitted hours and the holes are loaded, the blast shall be fired as soon as safety allows. In the event that blasting is found necessary outside the permitted hours, the Contractor shall inform local residents within hearing and vibration range and the jurisdictional agencies prior to firing. The Contractor shall report in writing to the Engineer the following day the conditions which required it to blast outside the permitted hours.

C. Furnish, install and operate at each site where blasting is being performed using electric methods of initiation an approved thunderstorm monitor and lightning warning device. Make adequate provisions for transmitting alarms from the device to all locations where preparation for blasting using electric initiation are in progress. Install and maintain the system in accordance with the manufacturer's recommendations. Test the entire monitoring and alarm system for satisfactory operation at intervals not exceeding two weeks, and suspend blasting operations until any defects have been corrected.

D. Employ the services of a blasting consultant, satisfactory to the Engineer and experienced in predicting and evaluating the effects of blasting on nearby structures, such that vibration levels at these structures do not exceed a level which will damage the structures or their contents, or cause undue alarm to their occupants. Employ the blasting consultant to plan and evaluate blasting operations.

1.04 SUBMITTALS

A. Submittals shall be made in accordance with the requirements of the General Conditions of the Contract Documents. In addition, the following specific information shall be provided:

1. At least 60 days prior to commencement of blasting operations, a copy of all applicable licenses and permits for the purchase, transportation, storage and use of explosives.

2. At least 60 days prior to commencement of blasting operations, a blasting monitoring plan including the name of the Blasting Vibration Consultant who will be responsible for establishing the monitoring program and interpreting the vibration readings; names of the trained personnel provided to operate the monitoring equipment; the type and model of blasting seismograph proposed for use; the number and location of proposed monitoring stations; the methods to be used to coordinate blast detonation with recording of the blast; and the steps to be taken if blasting vibrations exceed or seem likely to exceed the vibration limits.

3. At least 60 days prior to any blasting operation, the initial blast design for that location including number, location, diameter, depth and inclination of drill holes on a scale drawing of the excavation or heading face; type and weight of explosive in each hole; delay arrangement showing delay period in each hole; total weight of explosive in the blast and maximum charge per delay; the method of detonation; calculations of peak particle velocities and air blast overpressures; and the precautions to be taken to prevent flying

rock or other debris. Manufacturers' data sheets shall be provided for all explosives and accessories to be used.

4. At least 15 days prior to any blasting operation, the blasting safety plan including: health and safety requirements of all governing legislation; certificates from all regulating agencies and relevant insurance companies; outline of safety training program for the Contractor's and Engineer's personnel; communication and warning procedures; samples of all report and inspection forms; and lightning protection plan.

5. Within the working day following each blast, the blasting records and information for each blast detonated:

   a. A complete description including the location, date and exact time of the blast; name and signature of person in responsible charge of loading and firing and their blaster permit number; details of each blast as listed above for the initial blast design and any departures from the blast design; comments regarding any misfires, unusual results or unusual effects; any other records required by applicable regulations; and the name and signature of the person preparing the report.

   b. The monitoring record including the location, date and exact time of the blast; general weather conditions; the locations of seismographs and type of ground on which they were located, instrument identification and their distances from the blast; the measured peak particle velocities; air blast overpressure records, if appropriate; and the name and signature of the observer.

1.05 QUALITY ASSURANCE

A. The blasting consultant shall have at least 10 years of blasting experience in tunneling. The blasting consultant shall be on call throughout the entire period that blasting is performed and shall be available at the site within 5 days at any time that the blasting consultant's services may be necessary as determined by the Engineer.

B. Blasting supervisors shall have a minimum of 5 years' experience in supervising the loading and firing of charges for the excavation of tunnels and shall have all necessary licenses and permits required by the appropriate jurisdictional agencies

C. Due to the potential for stray currents and other extraneous electricity,

the Contractor shall use a non-electric detonation system.

PART 2 PRODUCTS

2.01 MATERIALS

A. Use only non-nitroglycerine explosives.

B. Store explosives and detonators in the manufacturers' boxes with date codes to allow the Engineer to determine their age of the materials. All explosives and detonators used in the work shall be less than one year old. Blasting products shall not be brought onto the site if the date codes are missing. When in the Engineer's opinion any blasting product is either of excessive age or in a deteriorated condition, that material shall not be used until its age or quality can be shown to be satisfactory.

2.02 EQUIPMENT

A. Use dust suppressant measures with air-powered or air-flush rock drilling equipment.

B. Wet down the muck pile after blasting to control dust during mucking operations.

PART 3 EXECUTION

3.01 GENERAL

A. Firing shall be permitted only after the proper precautions have been taken for the protection of all persons, work and property.

B. The following limits on peak particle velocities and air blast overpressure, or such lower limits as established by the Contractor's Blasting Vibration Consultant, shall apply:

1. At structures and utilities in the vicinity of blasting operations, the peak particle velocity resulting from blasting shall not exceed:

   a. Frequency < 3 Hz: 0.2 inches/second.
   b. Frequency 3 - 10 Hz: 0.5 inches/second.
   c. Frequency 10 - 40 Hz: varying linearly 0.5 to 1.0 inches/second.
   d. Frequency > 40 Hz: 1.0 inches/second.

The above limits are adopted from modified blasting level criteria given in U.S. Department of the Interior, Bureau of Mines, Report of Investigation

8507.

2. In the permanent concrete works, the peak particle velocities resulting from blasting shall not exceed 2 inches per second.

3. At the nearest structure liable to damage from air blast overpressure, the mean peak air blast overpressure shall not exceed 0.01 psi.

Measure readings for peak particle velocity in three orthogonal directions by equipment approved by the Engineer that is either continually recording or triggered by a preset level of vibration. Determine particle velocity in each frequency range by spectral analysis. Zero crossing method to determine frequency is not acceptable.

C. Blasting within 50 feet of permanent concrete work will be permitted only after approval of the Contractor's plans showing the relative positions of the concrete and the area to be blasted, and the blasting technique to be employed. All concrete work shall be protected by limiting the size of blasts, covering blasts and by other means until it is established that there is no danger of damage caused by either vibration or flying rock.

D. Exercise all possible care in drilling and blasting operations to ensure the stability of the remaining rock and to keep over break to a minimum. Controlled blasting techniques shall be used.

E. At each work site where blasting is being performed, erect signboards of adequate size stating that blasting operations are taking place in the work site and such signs shall be clearly visible at all points of access to the work site.

F. Monitor the first blast at each location as a test case, and modify the initial blast design for that location if the monitoring record indicates that the vibration and air blast overpressure limits were exceeded or may be exceeded in subsequent blasts. Resubmit the blast design to the Engineer. Continue vibration recording and air blast overpressure monitoring for every blast, and further adjustments to the blast design shall be made when the records indicate vibration or air blast overpressure in excess of the established limits.

G. Before the firing of any blast where flying material may result in damage to persons, property or the work, cover the rock to be blasted with a suitable matting to prevent flying debris. After a blast is fired, remove all loose and shattered rock or other loose material which may endanger the structure or the workers, and make the excavation safe before continuing with the work. Carry out similar checks on previously excavated sections at least

every 48 hours and recheck the support system, tightening lagging and blocking, and adding rock dowels, mesh and other support measures as required. Before drilling new blast holes, thoroughly clean the face and examined the face for holes containing undetonated explosive.

H. In the event that damage occurs due to blasting work, suspend all blasting immediately and make a report to the Engineer. Before resuming blasting, adjust the blast design and resubmit it to the Engineer, and take any other appropriate measures to control the effects of blasting.

I. If blasting causes excessive over break or excessive fracturing of the surrounding rock, or is otherwise detrimental to the work, modify the blast design as necessary to achieve the desired result, and resubmit it to the Engineer.

+ + + END OF SECTION 02020 + + +

SECTION 02112

Route Clearing

PART 1 – GENERAL

1.01 SCOPE

A. The extent of route clearing is that minimum degree of clearing necessary to carry out construction activities such as pipe bursting, pipe repairs and other pipeline renewal processes including construction of appurtenances, as well as other additional clearing needed for access purposes.

B. The Contractor shall endeavor to minimize disruption to the neighborhood and shall adjust route-clearing plans to avoid important landscaping features where practicable.

C. Route clearing operations include, but are not limited to, the following:

1. All coordination, permitting, plan development and submittals, and other associated items in accordance with the City of Atlanta's Tree Protection Ordinance and Greenway requirements.

2. Notification of the One Call Center for location and marking of existing utilities within the work zone

3. Erosion control of disturbed areas

4. Protecting trees, plants, buffers, and above-grade and underground improvements

5. Removal and disposal of debris, trees and other vegetation

6. Clearing

7. Removing above-grade improvements

8. Removing underground improvements

9. Restoring damaged improvements

1.02 QUALITY ASSURANCE

A. The Contractor shall comply with applicable codes, ordinances, rules, regulations and laws of local, municipal, state or federal authorities having jurisdiction over the Project. All required permits of a temporary nature,

including coordination with local officials, plans development and approval, submittals, etc., shall be obtained for construction operations by the Contractor.

B. Burning of cleared materials on site is not permitted. The Contractor shall allow in rates for complete removal of all material arising from any necessary clearing and grubbing.

C. Protection of Existing Improvements:

1. Provide barricades, coverings, or other types of protection necessary to prevent unnecessary damage to existing improvements.

2. Protect improvements on adjoining properties as well as those on the project site. Restore improvements damaged by this work to their original condition, as acceptable to the Owners or other parties or authorities having jurisdiction. Replace property line monuments (such as iron pins) removed or disturbed by clearing operations. This work shall be performed by a Land Surveyor licensed in the State of Georgia.

D. Protection of Existing Trees and Vegetation:

1. Protect existing trees and other vegetation against unnecessary cutting, breaking or skinning of roots, skinning and bruising of bark, smothering of trees by stockpiling construction materials or excavated materials within drip lines, excess foot or vehicular traffic, or parking of vehicles or equipment within drip line. Provide temporary fences, barricades or guards as required to protect trees and vegetation to be left standing.

2. Provide protection for tree roots over 1-1/2 inches diameter that are cut during any construction operation. Coat the cut faces with emulsified asphalt, or other acceptable coating, especially formulated for horticultural use on cut or damaged plant tissues. Temporarily cover all exposed roots of trees with wet burlap to prevent roots from drying out; provide earth cover as soon as possible.

3. Repair or replace unnecessarily damaged trees and vegetation, as determined by the Engineer/City Arborist and/or Planning Department, resulting from any construction operation, in a manner acceptable to the property owner and the Engineer. A qualified nurseryman shall perform tree damage repair. Replace unnecessarily damaged trees that cannot be repaired and restored to full-growth status, as determined by the tree surgeon. Replace felled trees in accordance with the approved plan.

E. Protection of Adjacent Property:

1. Protect improvements, trees and vegetation on adjoining property as well as those on property requiring route-clearing work.

2. Execute work so as not to create a nuisance to any person including persons utilizing adjacent property.

3. Use work methods and provide temporary facilities as necessary to prevent washing, erosion, siltation or dust damage, or hazard to persons and property, within and off the work area.

PART 2 – PRODUCTS

2.01 EQUIPMENT

A. The Contractor shall furnish equipment of the type normally used in clearing and grubbing operations including, but not limited to, tractors, trucks, loaders, mowers and clippers.

PART 3 – EXECUTION

3.01 CLEARING

A. Route clearing operations shall begin no more than seven days before beginning construction work for any area.

B. Materials to be cleared, grubbed and removed from the project site include but are not limited to vegetation, trees, stumps, roots, lawns, shrubbery, gardens, paving, miscellaneous structures, debris, and abandoned utilities to the minimum practicable extent to complete the work. Limit clearing to a single lane work route without provision for construction vehicles to pass utility operation. Accurately determine limitations of construction easement or right-of-way, and keep construction activity within such limits.

C. Grubbing shall consist of completely removing roots, stumps, trash and other debris from all graded areas so that topsoil is free of roots and debris. Topsoil is to be left sufficiently clean so that further picking and raking will not be required.

D. All stumps, roots, foundations and planking embedded in the ground shall be removed and disposed of. Piling and butts of utility poles shall be removed to a minimum depth of two feet below the limits of excavation for

structures, trenches and roadways or two feet below finish grade, whichever is lower.

E. Landscaping features shall include, but are not necessarily limited to: fences, cultivated trees, cultivated shrubbery, property corners, man-made improvements, subdivision and other signs shall be moved off the easement. The Contractor shall take extreme care in moving landscape features and shall re-establish these features as directed by the Engineer.

F. Surface rocks and boulders shall be grubbed from the soil and removed from the site if not suitable as Rip Rap.

G. Where tree limbs interfere with utility wires, or where the trees to be felled are in close proximity to utility wires, the tree shall be taken down in sections to eliminate the possibility of damage to the utility.

H. Any work pertaining to utility poles shall comply with the requirements of the appropriate utility.

I. All fences adjoining any excavation or embankment that, in the Contractor's opinion, may be damaged or buried, shall be carefully removed, stored and replaced. Any fencing that, in the Engineer's opinion, is significantly damaged shall be replaced with new fence material of equal or better quality and construction.

J. Stumps and roots shall be grubbed and removed to a depth not less than two feet below grade. All holes or cavities which extend below the subgrade elevation of the proposed work shall be filled with crushed rock or other suitable material, compacted to the same density as the surrounding material.

K. The Contractor shall exercise special precautions for the protection and preservation of trees, cultivated shrubs, sod, fences, etc. situated within the limits of any temporary easements, but not directly within the permanent easements. The Contractor shall be held liable for any damage the Contractor's operations have inflicted on such property.

L. The Contractor shall be responsible for all damages to existing improvements outside the permanent easement resulting from Contractor's operations.

M. Remove lawn sod by cutting into maximum size which can be handled without tearing, stripping sod and underlying topsoil, and stockpiling for use in restoring the surface area. Water sod and otherwise maintain sod in viable, growing condition. Alternative means of lawn sod replacement may be considered by the Engineer.

N. Remove above-grade structures only where specifically authorized.

O. Remove conflicting fences and provide effective, temporary measures to prevent domestic animals from wandering to other lands. Reconstruct fences promptly.

P. Remove abandoned underground facilities such as utilities and structures, walls, footings, basements, wells, septic tanks, cisterns, underground pipe, and other items which conflict with construction.

3.02 HOLES AND DEPRESSIONS

A. Fill holes, depressions and voids created or exposed by clearing operations with non-organic soil material, unless further excavation or earthwork is indicated.

B. Place fill material in horizontal layers not exceeding six inches loose-depth and thoroughly compact to a density at least equal to adjacent original ground.

3.03 DISPOSAL OF WASTE MATERIALS

A. Disposal General Requirements: Accomplish disposal of cleared matter daily so as to maintain site in a safe and neat condition throughout the contract period. Owners of the property may remove merchantable timber, buildings or other items of value from the work site before the Contractor begins operations, and no assurance exists that any such material will be on the work site when the Contractor begins work.

B. On-Site Disposal:

1. On undeveloped property, grind trees, limbs and brush into mulch and distribute within the work area from which cut, in such a way as not to be objectionable to the property owner. Properly dispose of all materials not utilized for mulch off-site. On developed property, remove all such clearing waste and properly dispose of it off-site.

3.04 DISPOSAL OF DEBRIS

A. The debris resulting from the clearing and grubbing operation shall be hauled to a disposal site secured by the Contractor and shall be disposed of in accordance with all requirements of federal, state, county and municipal regulations. Except that debris utilized as mulch, no debris of any kind shall be deposited in any stream or body of water, or in any street or alley. No debris shall be deposited upon any private property except with written consent of the property owner. In no case shall any material or debris of any kind be left on the Project, shoved onto abutting private properties or buried on the Project.

3.05 CONSTRUCTION ACCESS ROUTE ON EASEMENT

A. When directed by the Engineer, a construction access route shall be built on the sewer easement for the purpose of accessing manholes and performing all other necessary work within the easement.

B. Construction access route shall be cut (10) ten feet wide, minimum, and (6) six inches deep below existing grade. Filter fabric shall be placed at the bottom of the cut, and surge stone shall be placed on top of the fabric, filling the six inch depth along the roadway.

C. The filter fabric for use under the stone shall be as specified in Section 02125.

D. Surge stone shall be 4” to 6” size (4X6) rip rap type stone, or equivalent. Use sound, tough, durable stones resistant to the action of air and water. Slabby or shaley pieces will not be acceptable. Specific gravity shall be 2.0 or greater. Stones shall have less than 66 percent wear when tested in accordance with AASHTO T-96.

3.06 TREE REMOVAL ON EASEMENTS

A. The contractor shall conform to the requirements of the City of Atlanta’s Tree Protection Ordinance before work commences

B. The Engineers approval shall be obtained prior to the removal of any trees from the easement. Such concurrence shall be obtained in writing.

C. The approval of the Engineer concerning the method and location of disposal of materials must be agreed with the owner and engineer before work commences.

D. All trees that need further processing (wood chips) on-site or disposal off-site must be processed or disposed of in conformance with Federal, State, and local rules and regulations.

E. Contractor shall ensure all utilities are located prior to the commencement of any clearing or construction work in the easement.

F. Contractor must acquire any necessary permits prior to commencement of any type of work done in the easement especially for the removal of trees and crossing of waterways.

G. Trees shall be felled into the cleared construction area or areas to be cleared and not onto vegetation to be preserved.

H. Trees that have fallen into water bodies, or beyond the construction area, shall be removed immediately.

END OF SECTION

(This page is intentionally blank)

SECTION 02125

Erosion and Sedimentation Control

PART 1 – GENERAL

1.01 SCOPE

A. The work specified in this Section consists of providing, maintaining and/or removing temporary erosion and sedimentation controls and providing and installing permanent erosion control measures, all as shown on the Contract Drawings and specified herein

B. Erosion and sediment controls include all appropriate techniques and materials as described in Chapter 6 of the "Manual for Erosion and Sediment Control in Georgia", published by the Georgia Soil and Water Conservation Commission (4310 Lexington Road, Athens, GA 30603, also available for free download on line at www.gaswcc.org) and as modified or enhanced in the Contract Specifications and Drawings.

C. All erosion and sediment control facilities shall be designed based on a 25-year, 24-hour rainfall event unless otherwise noted or directed by the Engineer.

1.02 RELATED SECTIONS

A. This Section references the following related Specification Sections:

02270 – Vegetative Erosion Control
02271 – Gabions
02273 – Riprap
03300 - Cast-In-Place Concrete

1.03 SUBMITTALS AND PERMITS

A. Furnish submittals in accordance with General Conditions Section GC-28, Working Drawings, Shop Drawings, Data on Material and Equipment, Samples and Licenses, and Manual for Erosion And Sediment Control in Georgia.

B. Submittals and Permits:

Within 15 days after the date of the Notice to Proceed, the Contractor shall submit a written description, drawings and schedule for typical applications of proposed temporary erosion and sedimentation controls through City of Atlanta's Bureau of Buildings to acquire a blanket Land Disturbance Permit (via the Site Development Department of the City of Atlanta's Department of

Watershed Management), and shall submit the documents to the Engineer for review. The description, drawings and schedule shall meet the requirements of the Georgia Erosion and Sedimentation Act of 1975 (OCGA 12-7-1), as amended, (available from the Environmental Protection Division of the Georgia Department of Natural Resources at 4244 International Parkway, Suite 114, Atlanta, GA 30354, also available for free download on line at http://www.gadnr.org/), the Rules of Georgia Department of Natural Resources Environmental Protection Division, Chapter 391-3-7 "Erosion and Sedimentation Control" (available from the Environmental Protection Division of the Georgia Department of Natural Resources at 4244 International Parkway, Suite 114, Atlanta, GA 30354, also available for free download on line at http://www.gadnr.org/) and the City of Atlanta's Code of Ordinances, Part II, Chapter 74, Article II "Land Disturbing Activities" (available from the City of Atlanta at 55 Trinity Avenue, Suite 4100 Atlanta, Georgia 30303, also available for free download on line at www.atlantaga.gov/), and NPDES Permit GAR 100002, effective 8/1/2008, which is available on the GA DNR website above. The Contractor shall pay any required fees for the Land Disturbance Permit. Land disturbance activity shall not commence until the Land Disturbance Permit is issued. The Engineer will provide reproducible plan sheets to the Contractor for Contractor's use. The reproducible plan sheets will not bear the Engineer's seal or logo and is provided only for the Contractor's convenience in obtaining the land disturbance permit. The Contractor shall be responsible for submitting to the Bureau of Buildings necessary and sufficient documentation to enable issuance of a permit. All fines imposed for violating the terms of the permit shall be paid by the Contractor at no additional cost to the Owner.

C. The written description, drawings and schedule shall indicate typical erosion and sediment controls for typical land disturbing activities that will ensure stormwater and site drainage from the temporarily disturbed areas shall be filtered or otherwise managed to minimize impacts on receiving waters and/or existing storm drain systems.

D. The description, drawings and schedule shall include both temporary and permanent seedings. The submittal shall include selection of grass species (minimum of two cool season and two warm season for temporary and permanent stabilization), planting dates and rates of application for seed, agricultural lime, fertilizer and mulching.

E. The contractor shall designate a Level 1-A certified worksite erosion control supervisor (WECS). The WECS shall be available on a 24-hour basis, 7-days per week and shall be available on site at all times during land disturbing activities, have the responsibility and authority to coordinate all equipment, personnel, and materials needed to maintain project site erosion control in accordance with the management practices and standards established in Chapter 6 of the "Manual for Erosion and Sediment Control for Georgia", relevant permits, and the Contract

Specifications and Drawings. Within 15 days after the date of Notice to Proceed, the Contractor shall submit the name and contact phone number(s) of its appointed WECS.

1.04 IMPLEMENTATION

A. Erosion and sedimentation control measures shown on the Contract Drawings are minimum requirements. The Contractor's methods of operation may dictate additional erosion and sedimentation control measures above and beyond those which are shown on the Contract Drawings and it shall be the Contractor's responsibility to determine and install such measures. The Contractor's failure to stabilize disturbed areas immediately following intermediate or final grading may dictate additional erosion and sedimentation control measures not shown on the Drawings and it shall be the Contractor's responsibility to determine and install such measures.

B. The Contractor shall notify the Engineer of any changes and/or additions to the erosion and sedimentation control plan necessary to accommodate the Contractor's methods of operation. No additional payment shall be made for erosion and sedimentation control measures made necessary by the Contractor's methods of operation.

C. The Contractor shall be solely responsible for control of erosion and sediment production within the project area boundaries and prevention of sedimentation of any adjacent waterways.

D. The Contractor shall install controls that will ensure that stormwater and drainage from the disturbed area of the Project site shall be filtered or otherwise managed to minimize impacts on receiving waters and/or existing storm drain systems. Discharged waters shall, upon visual inspection, be reasonably free of soil particles and shall meet all applicable permit turbidity requirements. The Contractor shall be responsible for all water quality testing mandated by applicable permits.

E. The Contractor shall be responsible for keeping the project site sufficiently moist to control dust.

1.05 QUALITY ASSURANCE

A. General: Perform all work under this Section in accordance with all pertinent rules and regulations including, but not necessarily limited to, those stated in the applicable permits and the Contract Specifications.

B. Conflicts: Where provisions of pertinent rules and regulations conflict with each other or these Specifications, the more stringent provisions shall govern. PART 2 – PRODUCTS

2.01 GENERAL

A. All materials shall be as described in Chapter 6 of the "Manual for Erosion and Sediment Control in Georgia" (referenced above) and as modified herein.

B. See Specification Section 02270 - Vegetative Erosion Control for additional vegetative materials and techniques used for erosion and sediment control. Materials and techniques covered by Section 02270 include mulching, seeding, sodding, and erosion control blankets and matting as well as other stablilzation methods.

C. Netting shall be 1/2-inch mesh, galvanized steel, chicken wire.

D. Geotextile for use under gabions, riprap, or other stone structures not designed for vehicle traffic shall be Mirafi "Filterweave 403" or approved equal.

E. Geotextile for use under construction exits or other stone structures designed for vehicle traffic shall be Mirafi "600X" or approved equal

F. Plywood shall be 3/4-inch thick exterior type.

G. Grout, where required, shall be composed of 1 part Portland Cement and 3 parts sand and mixed with water to a workable consistency.

2.02 SEDIMENT BARRIER

A. Types A, B, and C silt fences shall meet the corresponding requirements of Section 171 - Temporary Silt Fence of the Department of Transportation, State of Georgia, Standard Specification Construction of Roads and Bridges, latest edition, as referenced in the "Manual for Erosion and Sediment Control in Georgia" (Standard Specification Book available at: GDOT, 2 Capitol Square, Room 215 – Contracts Administration, Atlanta, GA, 30334, 404-656-5293)

B. Silt fence fabric for Type A and B fences shall be Mirafi "FF 100" or approved equal. Silt fence fabric for Type C fences shall be Mirafi "Filterweave 402" or approved equal.

C. Hay bales shall be clean, weed-free cereal hay 80 to 100 pounds or larger.

2.03 RIP RAP

A. See Specification Section 02273 - Riprap for riprap material requirements.

B. Unless otherwise shown or noted riprap shall be Type 3, as defined in Section 02273.

2.04 GABIONS

A. See Specification Section 02271 – Gabions for gabion material requirements.

2.05 CONCRETE

A. See Specification Section 03300 – Cast-In-Place Concrete for concrete material requirements.

PART 3 – EXECUTION

3.01 BASIC PRINCIPLES

A. Conduct the earthwork and excavation activities in such a manner to follow existing contours and consider soil type and condition.

B. Minimize the disturbed area and the duration of exposure to erosion elements.

C. Stabilize disturbed areas immediately with the most efficient and effective erosion control measures..

D. Safely convey run-off from the site to an outlet such that erosion will not be increased off site.

E. Retain sediment on site that was generated on site.

F. Minimize encroachment upon watercourses.

3.02 GENERAL

A. Provide all materials and promptly take all actions necessary to achieve effective erosion and sedimentation control in accordance with the Georgia Erosion and Sedimentation Act of 1975, as amended, Rules of Georgia Department of Natural Resources Environmental Protection Division, Chapter 391-3-7 “Erosion and Sediment Control”, and the City of Atlanta’s Code of Ordinances, Part II, Chapter 74, Article II “Land Disturbing Activities”. The Contractor shall follow the Best Management Practices as

described in Chapter 6 of the “Manual for Erosion and Sediment Control in Georgia” and as modified in these Specifications.

B. Silt dams, silt fences, traps, barriers, check dams, appurtenances and other measures and devices shall be installed as indicated on the Contract Drawings and as required by applicable permits, shall be maintained until no longer needed, and shall then be removed. Deteriorated hay bales and dislodged filter stone shall be replaced with new materials. Detention ponds, if constructed, shall be maintained in a condition ensuring that unfiltered water will not leave the pond.

C. Where the Contractor's erosion and sedimentation control practices are inadequate, the Engineer may direct the Contractor to provide temporary vegetative cover with fast growing seedings. Such temporary vegetative cover shall be provided by the Contractor in compliance with the Manual for Erosion and Sedimentation Control in Georgia, specifically in the selection of grass species, planting dates and application rates for seed, fertilizer, agricultural lime, and mulching, with the exception that kudzu shall not be permitted.

D. All erosion and sedimentation control devices, including check dams, shall be inspected by the Contractor at least weekly and after each rainfall occurrence and cleaned out and repaired by the Contractor as necessary.

E. Temporary erosion and sedimentation control devices shall be installed and maintained from the initial land disturbance activity until the satisfactory completion and establishment of permanent vegetation. At that time, temporary devices shall be removed. Removal of sediment and erosion control measures shall be approved by the Engineer and shall not disturb established vegetation.

F. Permanent erosion control measures shall be implemented as soon as practical after the completion of pipe installation or land disturbance for each site. In no event shall implementation be postponed when no further construction activities will impact that portion or segment of the Project. Partial payment requests may be withheld for those portions of the Project not complying with this requirement.

G. If a location is indicated or noted on the Contract Drawings, dispose of all excess sediment removed from temporary erosion and sediment control devices on site as indicated. Where no on-site disposal is indicated or suitable, the sediment shall be hauled off site to an appropriate disposal location arranged by the Contractor and at its sole expense.

H. See Specification Section 02270 - Vegetative Erosion Control for vegetative erosion and sediment control methodology including mulching, seeding, sodding, and erosion control blankets and matting as well as other stablilzation methods.

I. All excess materials and removed materials shall be removed from the site immediately after they are no longer in use.

3.03 CHECK DAM

A. Install and maintain check dam as indicated in the Manual for Erosion and Sediment Control in Georgia, and as modified in these specifications and as shown on the Drawings.

B. Check dams shall be constructed to be stable throughout their planned life. The dam shall be constructed well into the abutment so that water cannot run around the dam.

C. Haybale check dams may be used as temporary check dams in concentrated flow areas while vegetation is becoming established. Haybale check dams shall not be used where the drainage area exceeds 1 acre. The haybales shall be embedded a minimum of 4 inches on its upslope side.

D. Periodic inspection of check dams is necessary. Repair shall be made as soon as possible to minimize damage and expense of repair. Sediment shall be removed when it reaches a depth of one-half the original dam height.

E. Whenever check dams are removed, care shall be taken to minimize disturbance to the remainder of the watercourse. The area where the check dam was removed shall be immediately shaped and smoothed to watercourse dimensions, seeded and mulched.

3.04 SILT FENCE

A. Install and maintain silt fence as indicated in the Manual for Erosion and Sediment Control in Georgia, and as modified in these specifications and as shown on the Drawings.

B. The filter fabric shall have an approved color mark yarn woven into the fabric or the manufacturer label and fabric name printed on the fabric every 100 feet.

C. Post installation shall start at the center of the low-point (if applicable) with the remaining posts spaced 6 feet apart for Type A and B silt fences and 4 feet apart for Type C silt fence. Wood and steel post may be used with Type A and Type B silt fences. Only steel post shall be used with Type C silt fence. For post size requirement see the latest edition of the Manual for Erosion and Sediment Control in Georgia.

D. Securely fasten geotextile to each support post in a way that will not result in tearing of geotextile when fence is subjected to service loads. The filter fabric shall be securely fastened to the fencing with staples or nails or other fasteners made for this purpose. The bottom of the filter fabric shall be installed in a toe trench. The toe trench shall then be filled with the soil and compacted.

E. Install geotextile fabric in one piece or continuously sewn to make one piece, for full length and height of fence, including portion of geotextile buried in toe trench.

F. Along stream buffers and other sensitive areas, two rows of Type C silt fence or one row of Type C silt fence backed by haybales shall be used.

G. Silt fences shall be inspected immediately after each rainfall and at least weekly during normal construction activities and daily during prolonged rainfall. Any needed repairs shall be made immediately. Promptly repair or replace silt fence that becomes damaged, unfastened or slumps.

H. Sediment deposits shall be removed when the deposits reach one-half the original height of the silt fence. Any sediment deposits remaining after the sediment barrier is no longer required shall be smoothed to conform to the natural topography and the area restored.

3.05 HAY BALES

A. Install and maintain hay bales as indicated in the Manual for Erosion and Sediment Control in Georgia, and as modified in these specifications and as shown on the Drawings.

B. Bales shall be placed lengthwise on the contour in a single row and embedded in the soil a minimum depth of 4 inches. Bales shall be securely anchored in place by stakes, bars or other acceptable means. Stakes for hay bale barriers shall be nominal 2 inch by 2 inch wood. The wood shall be sound with a minimum length of 3 feet. The stakes shall be driven into the ground 18 to 24 inches. Equivalent metal rods or steel bars may be used.

C. Hay bales shall be inspected immediately after each rainfall and at least weekly during normal construction activities and daily during prolonged rainfall. Any needed repairs shall be made immediately.

D. Sediment deposits shall be removed when the deposits reach one-half the original height of the hay bales. Any sediment deposits remaining after the sediment barrier is no longer required shall be smoothed to conform to the natural topography and the area restored as specified in the Contract Documents.

3.06 INLET SEDIMENT TRAP

A. Install and maintain inlet sediment traps as indicated in the Manual for Erosion and Sediment Control in Georgia, and as modified in these specifications and as shown on the Drawings.

B. Sediment traps shall be constructed on natural ground surface, on an excavated surface, or on machine compacted fill provided they have a non-erodible outlet.

C. Fabric Frame Inlet Sediment Traps: Filter fabric fitted around a supporting frame shall be used for inlet protection where the inlet drains a relatively flat area (slope no greater than 5 percent) and the inlets do not receive concentrated flows. The frame shall be constructed from Type C silt fence filter fabric supported by steel posts. Stakes shall be spaced evenly around the perimeter of the inlet a maximum of 3 feet apart and securely driven into the ground approximately 18 inches deep. The fabric shall be entrenched 12 inches and backfilled with crushed stone or compacted soil. Fabric shall be securely fastened to the posts, and fabric ends shall be overlapped a minimum of 18 inches or wrapped together around a post.

D. Baffle Box: A baffle box inlet sediment trap shall be used for inlets receiving runoff with a higher volume or velocity. The baffle box shall be constructed of 2” x 4” boards spaced a maximum of 1 inch apart or of plywood with weep holes. The weep holes shall be 2 inches in diameter spaced approximately 6 inches on center vertically and horizontally. The entire box shall be wrapped in Type C silt fence filter fabric. The filter fabric shall be entrenched 12 inches and backfilled. Gravel shall be placed outside the box, all around the inlet, to a depth of 2 to 4 inches.

E. Block and Gravel Drop Inlet Sediment Traps: Block and gravel drop inlets shall be used where heavy flows are expected and where an overflow capacity is necessary to prevent excessive ponding around the structure. On each side of the structure one block, in the bottom row, shall be placed on its side to allow the pool to drain. The foundation shall be excavated at least 2 inches below the crest of the storm drain. The bottom row of blocks shall be placed against the edge of the storm drain for lateral support and to avoid washouts when overflow occurs. When needed, lateral support shall be provided to subsequent rows by placing 2” x 4” wood studs through the block openings. To hold gravel in place, hardware cloth or comparable wire mesh with ½ inch openings shall be carefully fitted over all block openings. Clean gravel shall be placed to a height of 2 inches below the top of the block on a 2:1 slope or flatter and smoothed to an even grade. Georgia DOT #57 washed stone is recommended.

F. Gravel Drop Inlet Sediment Traps: Gravel drop inlet protection shall be used where heavy concentrated flows are expected. The slope toward the inlet shall be no steeper than 3:1. To prevent gravel from entering the inlet, an area of level stone, that is a minimum of 1 foot wide, shall be placed between the structure and around the inlet. Stone that is 3 inches or larger in diameter shall be used on the slope toward the inlet. On the slope away from the inlet, #57 (½" to ¾" diameter) washed stone shall be placed in a layer at least one foot (1') thick.

G. Sod Inlet Protection: Sod inlet protection shall be used at the time of permanent seeding to protect inlets from sediment and mulch material until the permanent vegetation becomes established. The sod shall be placed to form a turf mat covering the soil for a distance of 4 feet from each side of the inlet structure. Sod strips shall be staggered so that adjacent strip ends are not aligned.

H. Sediment traps shall be inspected daily and after each rain. Repairs shall be made as needed. Sediment shall be removed when the sediment has accumulated to one-half the height of the trap. For excavated inlet sediment traps, sediment shall be removed when one-half the storage capacity has been lost due to sediment accumulation. Sediment that is removed from sediment traps shall be properly disposed of and stabilized so that it will not enter the inlet or any waters bodies. Sediment shall not be washed into the inlet. Sod inlet protection shall be maintained as specified in the latest edition of the Manual for Erosion and Sediment Control in Georgia.

I. Sediment traps shall be removed when the contributing drainage area has been adequately stabilized. All materials and any unstable soil shall be salvaged or properly disposed of. The disturbed area shall be brought back to proper grade then smoothed and compacted. All bare areas around the inlet shall be permanently stabilized.

3.07 TEMPORARY STREAM CROSSING

A. Install and maintain temporary stream crossings as indicated in the Manual for Erosion and Sediment Control in Georgia, and as modified in these specifications and as shown on the Drawings.

B. The area under the embankment shall be cleared, grubbed, and stripped of any vegetation and root mat. To facilitate cleanout, the pool area shall be cleared.

C. Fill material for the embankment shall be free of roots or other woody vegetation, organic material, large stones, and other objectionable material. The embankment shall be compacted in 8-inch layers by

traversing with construction equipment.

D. The earthen embankment shall be seeded with temporary or permanent vegetation within 7 days of construction.

E. Construction operations shall be carried out in such a manner that erosion and water pollution are minimized.

F. All cut and fill slopes shall be 2:1 or flatter.

G. Temporary sediment traps shall be inspected after each period of significant rainfall. Sediment shall be removed and the trap restored to its original dimensions when the sediment has accumulated to one-half the design depth of the trap. The sediment removed shall be placed in the designated disposal area. The contaminated part of the gravel facing shall be replaced.

H. The structure shall be checked for damage from erosion or piping. The depth of the spillway shall be checked periodically to ensure it is a minimum of 1.0 ft below the low point of the embankment. Any observed settlement of the embankment shall be filled immediately to slightly above design grade. Any riprap displaced from the spillway shall be replaced immediately.

I. After all sediment-producing areas have been permanently stabilized, the structure and all unstable sediment shall be removed. The area shall be smoothed to blend with the adjoining areas and restored as specified in the Contract Documents.

3.08 RIP RAP

A. Refer to Specification Section 02273 - Riprap for general riprap requirements.

B. Install and maintain riprap for all erosion and sediment control methodologies as indicated in the Manual for Erosion and Sediment Control in Georgia and as specified or modified in the Contract Documents.

3.09 GABIONS

A. Refer to Specification Section 02271 - Gabions for general gabion requirements

B. Install and maintain gabions for all erosion and sediment control methodologies as indicated in the Manual for Erosion and Sediment Control in Georgia and as specified or modified in the Contract Documents.

3.10 CONCRETE

A. Refer to Specification Section 03300 - Cast-In-Place Concrete for general concrete requirements.

B. Install concrete for all erosion and sediment control methodologies as indicated in the Manual for Erosion and Sediment Control in Georgia and as specified or modified in the Contract Documents.

3.11 CONSTRUCTION EXIT

A. Construction exits will be constructed and maintained in accordance with the Manual for Erosion and Sediment Control in Georgia as a minimum and/or as specified or modified in the Contract Documents.

END OF SECTION

SECTION 02200

Earthwork

PART 1 – GENERAL

1.01 REQUIREMENTS

A. This Section includes earthwork and related operations, including, but not limited to: excavating all classes of material encountered; trenching, handling, storage, transportation, and disposal of all excavated and unsuitable material; construction of fills and embankments; backfilling around structures and pipe; backfilling all trenches and pits; compacting; all sheeting, shoring, and bracing; preparation of subgrades; surfacing and grading; and any other similar, incidental, or appurtenant earthwork operation which may be necessary to properly complete the Work.

B. The Contractor shall provide all services, labor, materials, and equipment required for all earthwork and related operations necessary or convenient to the Contractor for furnishing complete Work as shown on the Drawings or specified in the Contract Documents.

1.02 RELATED SECTIONS

B. The Work of the following Sections specifically apply to the Work of this Section. Other Sections of the Specifications, not referenced below, shall also apply to the extent required for proper performance of Work.

1. Section 01410: Testing Laboratory Services
2. Section 02125: Erosion and Sedimentation Control
3. Section 02140: Dewatering
4. Section 02575: Removing and Replacing Pavement

1.03 GENERAL

A. Safety: Comply with local regulations and with the provisions of the “Manual of Accident Prevention in Construction” of the Associated General Contractors of America, Inc., Occupational Safety and Health Act (OSHA) and all other applicable safety regulations.

B. Earthwork operations shall be performed in a safe and proper manner with appropriate precautions being taken against all hazards.

C. All excavated and filled areas for structure, trenches, fills, topsoil areas, embankments and channels shall be maintained by the Contractor in good condition at all times until final acceptance by the City. All damage caused by erosion or other construction operations shall be repaired by the Contractor using material of the same type as the damaged material at no cost to the City.

D. The Contractor shall control grading in a manner to prevent water running into excavations. Obstruction of surface drainage shall be avoided and means shall be provided whereby storm water can flow uninterrupted in existing open ditches or channels, other surface drains, or temporary drains.

E. No classification of excavated materials will be made, except for rock excavation. Excavation work shall include the removal and subsequent handling of all materials excavated or otherwise removed in performance of the Work, regardless of the type, character, composition or condition thereof.

F. All earthwork operations shall comply with the requirements of OSHA Construction Standards, Part 1926, Subpart P, Excavations, Trenching, and Shoring, and Subpart O, Motor Vehicles, Mechanized Equipment, and Marine Operations, and shall be conducted in a manner acceptable to the Engineer.

1.04 CONTRACTOR SUBMITTALS

A. The Contractor shall submit samples of all materials proposed to be used in the work in accordance with the requirements in Section GC-28 – Working Drawings, Shop Drawings, Data on Material and Equipment, Samples and Licenses. Sample size shall be as determined by the testing laboratory.

.

B. Submittals shall be made in accordance with the requirements of the General Conditions of the Contract Documents. In addition, the following specific information shall be provided:

.

1. Copies of permits obtained by the Contractor for the work.

2. Test results, certification of compliance, source, and sample for all imported materials.

3. <u>Samples of fill materials to be used</u>: Samples shall be submitted in 2 weeks in advance of use and shall consist of 0.5 cubic feet of each type of material.

1.05 QUALITY ASSURANCE

A. Reference Standard: Comply with all federal, state and local laws or ordinances, as well as all applicable codes, standards, regulations and/or regulatory agency requirements including the partial listing below:

1.	ASTM C136-84a	Standard Method for Sieve Analysis of Fine and Course Aggregates.
2.	ASTM D1556-82	Test Method for Density of Soils in Place by the Sand Cone Method.
3.	ASTM D1557-78	Test Methods for Moisture-Density Relations of Soils and Soil-Aggregate Mixtures Using 10-lb (405-kg) Ramme and 18-in. (457-mm Drop).
4.	ASTM D3107-88	Test Method for Moisture Content of Soil and Soil Aggregate in Place by Nuclear Methods (Shallow Depth).

PART 2 – PRODUCTS

2.01 SUITABLE FILL AND BACKFILL MATERIAL REQUIREMENTS

A. General: Fill, backfill, and embankment materials shall be suitable selected or processed clean, fine earth, rock, or sand, free from grass, roots, brush, or other vegetation.

B. Fill and backfill materials to be placed within 6 inches of any structure or pipe shall be free of rocks or unbroken masses of earth materials having a maximum dimension larger than 3 inches.

C. Suitable Materials: Materials not defined as unsuitable in Section 2.02 are defined as suitable materials and may be used in fills, backfilling, and embankment construction in **unpaved areas**. In addition, when acceptable to the Engineer, some of the material listed as unsuitable may be used when thoroughly mixed with suitable material to form a stable composite. All backfill within the public right of way which impacts the existing asphalt or concrete pavement of streets or sidewalks **(paved areas)** shall be Graded Aggregate Base material in compliance with Appendix F - Department of Public Works Public Right of Way Manual.

D. Suitable materials may be obtained from on-site excavations, may be processed on-site materials, or may be imported. If imported materials are required by this Section, or to meet the quantity requirements of the project,

the Contractor shall provide the imported materials at no additional expense to the City, unless a unit price item is included for imported materials in the bidding schedule.

E. Earthwork Materials:

1. Controlled Fill Soils:

a. Proposed fill soils shall be laboratory tested prior to construction use to determine their suitability. All material shall be subject to the approval of the Engineer. Testing shall be paid for separately by the City directly to the testing laboratory.

b. Notification: For approval of imported fill material, notify the Engineering and Testing Laboratory at least three (3) weeks in advance of intention to import material, designate the proposed borrow area, and permit the Testing Laboratory to sample as necessary from the borrow area for the purpose of making acceptance tests to prove the quality of the material. Test results shall be submitted to the Engineer for approval.

c. All fill material shall be soil exclusive of organic matter, frozen lumps, or other deleterious substances.

d. It shall contain no rocks or lumps over 3-inches maximum in dimension.

e. Fill material shall be low to moderate plasticity soil (PI less than 30).

2. Structural Fill and Structural Backfill:

a. Select on site materials may be suitable. Testing and recommendation of suitability shall be made by the Testing Laboratory and submitted by the Contractor to the Engineer for approval. Testing shall be paid for separately by the City directly to the testing laboratory.

b Imported material shall be sand, uniformly graded crushed rock or other select material recommended by the Testing laboratory and submitted by the Contractor to the Engineer for approval. Graded aggregate base material as specified in Section 02575, Removing and replacing pavement, is acceptable.

c. Crushed Rock: Crushed rock used for pipe bedding and drain stone shall conform to the Georgia Department of

Transportation Standard Specifications for Construction of Road and Bridges, 800.01 for No. 57 Stone. For concrete, cast iron, steel and galvanized iron pipe less than 12-inch, use ¾ inch minus gravel, crushed gravel or crushed rock. For plastic pipe use ¼ -inch pea gravel.

3. Top Soil: Dark organic weed free loam free of muck.

4. Coarse Aggregate: Coarse aggregate shall conform to the Georgia Department of Transportation Standard Specifications for construction of Road and Bridges, 800.01 for No. 57 Stone, Group II, and shall have the following gradation:

Sieve Size	Percent Passing	
1-1/2 inch	100	-
1 inch	95	100
¾ inch	-	-
½ inch	25	60
#4	0	10
#8	0	5

5. Flowable Fill: See Specification Section 03300.

F. Sheeting, Bracing, and Timbering: The Contractor shall furnish, place and maintain all sheeting, bracing and timbering required to properly support trenches and other excavations in open cut and to prevent all movements of the soil, pavement, structures, or utilities outside of the trench or pit.

1. General:

a. Sheeting, bracing and timbering shall be so placed as to allow the Work to be constructed to the lines and grades shown on the Drawings and as ordered by the Engineer.

b. If at any time the method being used by the Contractor for supporting any material or structure in or adjacent to any excavation is not reasonably safe in the opinion of the Engineer, the Engineer may require and the Contractor shall provide additional bracing and support necessary to furnish the added degree of safety required by the Engineer. The Contractor shall provide bracing and support by such methods accepted by the Engineer as Contractor may elect to use, but the taking of such added precautions shall in no way relieve the Contractor of sole and final responsibility for the safety of lives, work, and structures.

c. All sheeting in contact with the concrete or masonry shall be removed or cut off and left in place as instructed by the Engineer.

2. Timber:

a. Timber may be substituted for steel sheet piling when approved by the Engineer. Timber for shoring, sheeting and bracing shall be sound and free of large or loose knots and in good condition. Size and spacing shall be in accordance with OSHA regulations.

b. Remove bracing and sheeting in units when backfill reaches the point necessary to protect the work and adjacent property. Leave sheeting in place when, in the opinion of the Engineer, it cannot be safely removed. Cut off sheeting left in place below the finished ground surface as instructed by the Engineer.

3. Steel Sheet Piling:

a. Steel sheet piling shall be the continuous interlock type. The weight, depth and section modulus of the sheet piling shall be sufficient to restrain the loads if earth pressure and surcharge from existing foundations. Procedure for installation and bracing shall be so scheduled and coordinated with the removal of the earth that the ground under existing structures shall be protected against lateral or vertical movements at all times. In addition to the drawings and computations, the Contractor shall provide closure and sealing details between sheet piling and existing facilities, as well as method of excavation within sheet pilling to the Engineer for review before commencing construction operations. Contractor shall be responsible for all damage to existing utilities and structures resulting from installation of sheet piling. Damage to existing utilities and/or structures resulting from installation of sheet piling shall be repaired to the satisfaction of the Engineer at the Contractor's expense.

G. Other Materials: All other materials, not specifically described but required for proper completion of the work of the Section, shall be as selected by the Contractor subject to the prior approval of the Engineer.

2.02 UNSUITABLE SOIL MATERIAL

A. Unsuitable materials include the materials listed below:

1. Soils, which, when classified under ASTM D 2487 - Standard Classification of Soils for Engineering Purposes (Unified Soil Classification System), fall :in the classifications of Pt, OH, CH, MH, or OL;

2. Soils that cannot be compacted sufficiently to achieve the density specified for the intended use;

3. Materials that contain hazardous or designated waste materials, including petroleum hydrocarbons, pesticides, heavy metals, and any material which may be classified as hazardous or toxic according to applicable regulations;

4. Soils that contain greater concentrations of chloride or sulfate ions, or have a soil resistivity or pH less than the existing on-site soils;

5. Topsoil, except as allowed below.

2.03 MATERIALS TESTING

A. All soils testing of samples will be done by a testing laboratory selected by the City in accordance with Section 01410. Testing shall be paid for by the City. At its discretion, the Engineer may request that the Contractor supply samples for testing of any material used in the Work.

B. Particle size analysis of soils and aggregates will be performed using ASTM D 422 - Standard Test Method for Particle-Size Analysis of Soils.

C. Determination of sand equivalent value will be performed using ASTM D 2419 - Standard Test Method for Sand Equivalent Value of Soils and Fine Aggregate.

D. Unified Soil Classification System: References in this Section to soil classification types and standards shall have the meanings and definitions indicated in ASTM D 2487. The Contractor shall be bound by all applicable provisions of said ASTM D 2487 in the interpretation of soil classifications.

E. The testing for chloride, sulfate, resistivity, and pH will be done in accordance with ANSI/AWWA C-105/A21.5 Standard.

2.04 ROCK EXCAVATION

A. Mechanical rock excavation shall include removal and disposal of the following:

1. All boulders measuring 1/3 of a cubic yard or more in volume;

2. All rock material in ledges, bedding deposits, and un-stratified masses which cannot be removed without systematic drilling and jack-hammering or blasting.

3. Conglomerate deposits which are so firmly cemented that they possess the characteristics of solid rock and which cannot be removed without systematic drilling and jack-hammering or blasting.

B. Blasting – See Specification Section 02405.

PART 3 – EXECUTION

3.01 EXCAVATION - GENERAL

A. General: Except when specifically provided to the contrary, excavation shall include the removal of all materials of whatever nature encountered, including all obstructions of any nature that would interfere with the proper execution and completion of the Work. The removal of said materials shall conform to the lines and grades indicated or ordered. Unless otherwise indicated, the entire construction site shall be stripped of all vegetation and debris, and such material shall be removed from the site prior to performing any excavation or placing any fill. The Contractor shall furnish, place, and maintain all supports and shoring that may be required for the sides of the excavations. Excavations shall be sloped or otherwise supported in a safe manner in accordance with applicable State safety requirements and the requirements of OSHA Safety and Health Standards for Construction (29CFR1926).

B. Removal and Exclusion of Water: The Contractor shall remove and exclude water, including stormwater, groundwater, irrigation water, and wastewater, from all excavations. Dewatering wells, wellpoints, sump pumps, or other means shall be used to remove water and continuously maintain groundwater at a level at least two feet below the bottom of excavations before the excavation work begins at each location. Water shall be removed and excluded until backfilling is complete and all field soils testing have been completed.

C. Topsoil:

1. Remove all topsoil to a depth at which subsoil is encountered, from all areas that are to be cut to lower grades or filled.

2. Topsoil to be used for finish grading may be stored on the site. It shall be piled properly, sloped to drain, and covered.

3. Other topsoil may be used for fill in non-critical areas with prior approval of the Engineer

D. Bracing and Sheeting:

1. Furnish, install, and maintain all sheeting, bracing, and shoring as may be required to properly support the sides of all excavations and to prevent all movement of earth that could in any way injure the work, adjacent property, or workers.

2. Properly support all trenches for piping and duct bank installation so as to conform to all pertinent rules and regulations and these Specifications. All trenches deeper than 5 feet shall be shored unless cut to the angle of repose of the excavated soils.

3. Exercise care in the removal of sheeting, shoring, bracing and timbering to prevent collapse or caving of the excavation faces being supported and damage to the work and adjacent property.

4. Do not leave any sheeting or bracing in the trench or excavation after completion of the work, unless approved or instructed by the Engineer.

5. All sheeting in contact with concrete or masonry shall be removed or cut off and left in place as instructed by the Engineer.

E. Obstructions:

1. Remove and dispose of all trees, stumps, roots, boulders, pavement, pipes, and the like, as required for the performance of the work.

2. Exercise care in excavating around catch basins, inlets, manholes, piping, duct banks, underground vaults, etc.

3. Avoid removing or loosening castings or pushing dirt into structures.

4. Damaged or displaced casting shall be repaired and replaced, and dirt entering the structures during the performance of the work shall be removed at no additional cost to the City.

F. Utilities to be Abandoned:

1. When piped, conduits, sewers or other structures are removed from the trench leaving dead ends in the ground, such ends shall be fully plugged and sealed as indicated on the Drawings.

2. Abandoned structures such as manholes, catch basins, or chambers shall be entirely removed unless otherwise specified or indicated on the Drawings.

3.02 HEAVE MONITORING AND CONTINGENCY PLANNING

A. Prior to excavation, pipe bursting or directional drilling, the Contractor shall identify any permanent structure, all buried utilities, all natural gas/petroleum pipelines, and any additional structures, which are within a horizontal distance 1.1 times the depth of any excavation deeper than the structure, utility, or natural gas pipeline. This Section does not limit the Contractor's choice of construction methods based on the site conditions.

B. The Contractor shall perform, at a minimum, daily visual inspections of the perimeter of the pipe burst, drill path or excavation to identify any signs of excessive heave or movement. The results from visual inspections shall be recorded with the daily survey log. Any area, which appears to be excessively deformed or damaged, shall immediately be brought to the attention of the Engineer and be corrected.

C. The Contractor shall prepare a contingency plan to mitigate the effects of excessive heave, settlement or movement of existing site features. The contingency plan is not to restrict the Contractor from using the best construction methods available to meet the conditions, but is required to demonstrate a reasonable preparedness to mitigate the effects of excessive heave movement or settlement. The following are minimum requirements for a contingency plan:

1. The Contractor shall prepare a contingency plan, outlining steps to be taken to protect structures, utilities, or gas pipes and stop excessive heave movement or settlement identified by the heave/settlement monitoring program.

2. The Contractor shall have all material, manpower, equipment, and other items identified in the contingency plan available at all times while excavations are ongoing or excavated areas are open.

3.03 STRUCTURE, ROADWAY, AND EMBANKMENT EXCAVATION

A. Excavation Beneath Structures and Embankments: Except where otherwise indicated for a particular structure or ordered by the Engineer, excavation shall be carried to the grade of the bottom of the footing or slab. Where indicated or ordered, areas beneath structures or fills shall be over-excavated. The subgrade areas beneath embankments shall be excavated to remove not less than the top 6 inches of native material and where such subgrade is sloped, the native material shall be benched. When such over-excavation is indicated both over-excavation and subsequent backfill to the

required grade shall be performed by the Contractor. When such over-excavation is not indicated, but is ordered by the Engineer, such over-excavation and any resulting backfill will be paid for under a separate unit price bid item if such bid item has been established; otherwise, payment will be made in accordance with a negotiated price. After the required excavation or over-excavation has been completed, the exposed surface shall be scarified to a depth of 6 inches, brought to optimum moisture content, and rolled with heavy compaction equipment to obtain 98 percent of maximum density.

B. Excavation Beneath Paved Areas: Excavation beneath paved areas shall be provided at minimum dimension shown on the drawings to minimize the disrupted area and volume of backfill required. All backfill material beneath paved areas shall be graded aggregate base material in accordance with Appendix F – Department of Public Works Public Right of Way Manual. The graded aggregate base surface elevation shall be depressed to receive the final pavement surface course as indicated on the Drawings. Controlled low strength flowable fill material may be provided in lieu of graded aggregate base if directed by the Engineer to provide backfill around sensitive or congested utilities or confined excavations where mechanical compaction is not practical.

C. Notification of Engineer: The Contractor shall notify the Engineer at least 3 days in advance of completion of any structure excavation and shall allow the Engineer a review period of at least one day before the exposed foundation is scarified and compacted or is covered with backfill or with any construction materials.

3.04 PIPELINE AND UTILITY TRENCH EXCAVATION

A. Exploratory Excavation:

1. The Contractor shall excavate and expose buried points of connection to existing utilities as required by Engineer.

2. Data, including dates, locations excavated, and sketches, shall be submitted to the Engineer within one week of excavation.

3. Damage to utilities from excavation activities shall be repaired by the Contractor at no charge to the City.

B. General: Unless otherwise indicated or ordered, excavation for pipelines and utilities shall be open-cut trenches with widths as indicated.

C. Trench Bottom: Except when pipe bedding is required, the bottom of the trench shall be excavated uniformly to the grade of the bottom of the pipe bedding. Excavations for pipe bells and welding shall be made as required.

D. Minimum Width of Trench: The minimum width of pipe trenches, measured at the crown of the pipe, shall not be less than 24-inches greater than the exterior diameter of the pipe, exclusive of bells. The minimum base width, measured at the invert of the piping, of such trench shall be not less than 24-inches greater than the exterior diameter of the pipe, exclusive of special structures or connections, and such minimum width shall be exclusive of all trench supports.

E. Maximum Width of Trench: The maximum allowable width of trench for all pipelines measured at the top of the pipe shall be the outside diameter of the pipe (exclusive of bells or collars) plus 24-inches, and such maximum shall be inclusive of all timbers and/or trench boxes, shoring, etc. A trench wider than the outside diameter plus 24-inches may be used without special bedding if the Contractor, at his expense, will furnish pipe of the required strength to carry the additional trench load. Such modifications shall be submitted to the Engineer and approved in writing. Whenever such maximum allowable width of trench is exceeded for any reason, except as provided for on the Drawings or in the Specifications or by the written instruction of the Engineer, the Engineer shall, at his discretion, require that the Contractor , at its own expense for all labor and materials, cradle the pipe in Class “B” concrete, or other approved pipe bedding.

F. Maximum length of Open Trench: Except by special permission by the Engineer, only that amount of pipe construction will be permitted, including excavation, construction of pipelines, and backfill in any one location, which can be completed in one day; however, maximum length of open trench shall never exceed 100 feet. This length includes open excavation, pipe laying and appurtenant construction and backfill that had not been temporarily resurfaced.

G. Trench Side Slopes:

1. Temporary trench excavation shall at all times conform to the safety requirements of OSHA.

2. Loose cobbles or boulders shall be removed form the sides of the trenches before allowing workers into the excavation, or the trench slopes must be protected with screening or other methods. Trench side slopes shall be kept moist during construction to prevent local sloughing and raveling. Surcharge loads due to construction equipment shall not be permitted within 5 feet of the top of any excavated slope.

3. If the Contractor elects to shore or otherwise stabilize the trench sides, he shall file with the Engineer for review, copies of drawings for same prepared and signed by a Civil Engineer duly registered in the State Georgia before commencing excavation.

H. Trench Over-Excavation: Where trenches are indicated to be over-excavated, excavation shall be to the depth indicated, and backfill shall be installed to the grade of the bottom of the pipe bedding.

I. Over-Excavation: When ordered by the Engineer, whether indicated on the Drawings or not, trenches shall be over-excavated beyond the depth and/or width shown or specified. Such over-excavation shall be to the dimensions ordered. The trench shall then be backfilled to the grade of the bottom of the pipe bedding. Over-excavation less than the limits on the Drawings or less than specified shall be done at no increase in cost to the City. When the over-excavation ordered by the Engineer is greater than the limits shown, additional payment will be made to the Contractor. Said additional payment will be made under separate unit price bid items for over-excavation if such bid items have been established; otherwise, payment will be made in accordance with a negotiated price.

J. Where pipelines are to be installed in embankments, fills, or structure backfills, the fill shall be constructed to a level at least one foot above the top of the pipe before the trench is excavated.

K. If a moveable trench shield is used during excavation operations, the trench width shall be wider than the shield so that the shield is free to be lifted and then moved horizontally without binding against the trench sidewalls. If the trench walls cave in or slough, the trench shall be excavated as an open excavation with sloped sidewalls or with trench shoring, as indicated and as required by the pipe structural design.

3.05 OVER-EXCAVATION NOT ORDERED OR INDICATED

A. Any over-excavation beyond the limits shown on the drawings or specified which was not ordered by the City, shall be backfilled to the required grade with the specified material(s) at no additional cost to the City.

3.06 EXCAVATION IN LAWN AREAS

A. Where excavation occurs in lawn areas, the sod shall be carefully removed, dampened, and stockpiled to preserve it for replacement. Excavated material may be placed on the lawn, provided that a drop cloth or other suitable method is employed to protect the lawn from damage. The lawn shall not remain covered for more than 72 hours. Immediately after completion of backfilling and testing of the pipeline, the sod shall be replaced and lightly rolled in a manner so as to restore the lawn as near as possible to its original condition. Contractor shall provide new sod if stockpiled sod has not been replaced within 72 hours.

3.07 EXCAVATION IN VICINITY OF TREES

A. Except where trees are indicated to be removed, trees shall be protected from injury during construction operations according to the Tree Protection Plan. No tree roots over 2 inches in diameter shall be cut without express permission of the Engineer. Trees shall be supported during excavation by any means previously reviewed by the Engineer.

3.08 ROCK EXCAVATION

A. When rock is encountered in trenches, it shall be removed to a minimum depth of six inches (6”) below the bell of the pipe.

B. The rock shall be stripped and measured by the Engineer at five foot (5 ft.) intervals, and the quantity calculated as the actual length multiplied by the average depth multiplied by the average trench width. Trench width shall be a minimum of twenty-four inches (24”), and a minimum of three inches (3”) wider on each side of the pipe bell.

3.09 DISPOSAL OF EXCESS EXCAVATED MATERIAL

A. The Contractor shall remove and dispose of all excavated material in excess of that required to backfill the excavation and to create necessary fills. This shall be done immediately after the backfill is completed to the satisfaction of the Engineer. All materials removed shall become the property of the Contractor, and he shall make his own arrangements satisfactory to the Engineer for their disposition.

B. All surplus material and such other materials as the Engineer may deem unfit for use as backfill, shall be disposed of by the Contractor so as to give a minimum of inconvenience to the public. In case of settlement after backfill, the Contractor shall supply sufficient material satisfactory to the Engineer to make up for the deficiency.

C. When so ordered by the Engineer, the Contractor shall immediately remove all excavated materials from the site and dispose of the same.

D. Any material, which may spill or drip from vehicles by hauling in the streets, shall be removed and the streets cleaned by the Contractor, to the satisfaction of the Engineer, or the proper officials of the municipality in which the hauling or work is being done.

E. The surface of all graded and spoil areas shall be left in a smooth and level or evenly sloped condition, free from stones, rubbish, or other debris.

3.10 SOIL BACKFILL – GENERAL

A. Backfill shall not be dropped directly upon any structure or pipe. Backfill shall not be placed around nor upon any structure until the concrete has attained sufficient strength to withstand the loads imposed. Backfill around water retaining structures shall not be placed until the structures have been tested, and the structures shall be full of water while backfill is being placed.

B. Except for drainrock materials being placed in over-excavated areas or trenches, backfill shall be placed after all water is removed from the excavation, and the trench sidewalls and bottom have been dried to moisture content suitable for compaction.

C. If a moveable trench shield is used during excavation, pipe installation, and backfill operations, the shield shall be moved by lifting the shield free of the trench bottom or backfill and then moving the shield horizontally, The Contractor shall not drag trench shields along the trench causing damage or displacement to the trench sidewalls, the pipe, or the bedding and backfill.

D. Immediately prior to placement of backfill materials, the bottoms and sidewalls of trenches and structure excavations shall have all loose sloughing, or caving soil and rock materials removed. Trench sidewalls shall consist of excavated surfaces that are in a relatively undisturbed condition before placement of backfill materials.

3.11 SOIL BACKFILL AND FILL PLACEMENT

A. Fill shall be placed in loose lifts not exceeding 8-inches in depth and shall be thoroughly compacted as herein specified.

B. All fill placements may be subject to fill density and moisture tests, which shall be performed to verify that the specified degree of compaction is being achieved. Testing shall be paid for separately by the City directly to the testing laboratory.

C. Prior to placement of any material in embankments, the area within embankment limits shall be stripped of topsoil and all unsuitable materials removed as described under Excavation. Area to receive fill shall then be scarified to a depth of at least 6-inches.

D. Fill materials shall be placed in continuous approximately horizontal layers extending the full width of the embankment cross-section and the full dimension of the excavation where practicable.

E. Fill materials shall be placed within 2 percent of the optimum moisture content Optimum moisture shall be maintained by sprinkling the layers with water as placed or by allowing material to dry before placement.

F. Compaction:

1. Fill material shall be compacted to dry densities as determined by the Standard Proctor Compaction Test performed in accordance with ASTM D698. Testing shall be paid for separately by the City directly to the testing laboratory.

2. Structural fill material supporting structures and pavement and other areas indicated on the Drawings shall be compacted to 95 percent of the Standard Proctor maximum dry density (ASTM D698) of the fill soil. The upper 12" of fill shall be compacted to 98 percent of the Standard Proctor maximum dry density.

3. Controlled fill for general site grading shall be compacted to 95 percent of the Standard Proctor maximum dry density.

4. Compaction of embankments shall be by sheepsfoot rollers with staggered uniformly spaced knobs and suitable cleaning devices. The projected area of each knob and the number and spacing of the knobs shall be such that the total weight of the roller and ballast when distributed over the area of one (1) row of knobs shall be 250 psi. Placement and compaction of materials shall extend beyond the final contours sufficiently to insure compaction of the material at the resulting final surface. Final contours shall then be achieved by a tracked bulldozer or grader shaping the face of the embankment.

5. Compaction of backfill around the structures shall be accomplished by power tamping equipment approved by the Engineer.

6. If tests indicate that density of backfill is less than that specified, the area shall be re-compacted or undercut, filled, and compacted until specified density is achieved.

G. Final Grading: Upon completion of construction operations, the area shall be graded to finish contour elevations and grades shown on the Drawings. Graded areas shall be made to blend with remaining ground surfaces. All surfaces shall be left smooth and free to drain

H. Moisture:

1. All fill shall be compacted with the moisture content as established by the 98 percent intercept on the moisture density curves or the moisture content at the shrinkage limit, whichever is less.

2. If fill material is too wet, provide and operate approved means to assist the drying of the fill until suitable for compaction

3. If fill material is too dry, provide and operate approved means to add moisture to the fill layers.

I. Proofrolling:

1. All areas where pavement or structures are to be built on compacted fill and other areas where indicated on the Drawings, shall be proofrolled to detect soft spots prior to the placement of fill material or construction of foundations.

2. Proofrolling shall consist of the moving a 20-30 ton loaded dump truck or pneumatic tire roller over the subgrade after the subgrade is shaped. Proofrolling shall be witnessed by the Engineer.

3. Pneumatic-tired rollers shall have not fewer than four pneumatic tired wheels which shall be of such size and ply that tire pressure can be maintained between 80 and 100 pounds per square inch for 25,000 pound wheel load during rolling operations. Unless otherwise required, rolling shall be done with tires inflated to 90 psi. The roller wheels shall be located abreast in a rigid steel frame. Each wheel shall be loaded with an individual weight box so that each wheel will bear an equal load when traversing uneven ground. The weigh boxes shall be suitable for ballast loading such that the load per wheel shall be 25,000 pounds. The spacing of the wheels shall insure that the distance between the nearest edges of adjacent tires shall be not greater than one-half of the tire width of a single tire at the operating pressure for a 25,000 pound wheelload. The roller shall be operated not faster than 5 feet/second.

4. Subgrade shall be proofrolled with 6 passes of the roller. Depressions that develop during the proofrolling operations shall be filled with suitable material and those filled areas shall be proofrolled with 6 passes of the roller. If, after having been filled and proofrolled, the subgrade still contains depressions, the soil shall be undercut to the full depth of the soft material or 5 feet whichever is less, backfilled, and rolled to achieve a subgrade acceptable to the Engineer.

5. After the proofrolled subgrade has been accepted by the Engineer, the surface of the subgrade shall be finished with a smooth steel wheel roller weighing not less than 10 tons. Finished surface of the subgrade shall be within a tolerance of 0.04 feet at every point.

6. Conduits, pipes, culverts and underdrains shall be neither disturbed nor damaged by proofrolling operations. Rollers shall neither pass

over, nor approach closer than 5 feet of conduits, pipes, culverts and underdrains unless the tops of those facilities are deeper than 3 feet.

3.12 PIPE BEDDING

A. The contractor shall excavate to a minimum of 8-inch below the bells or couplings for the full width of the trench and shall place a minimum of 8-inches of No. 57 crushed stone bedding upon which the pipe is to be laid. In cases as determined by the Engineer, where trench material is suitable for use as bedding, the trench may be excavated to a point above the invert grade, and the trench bottom handshaped so that the bottom segment of the pipe is firmly supported on undisturbed material.

B. Gravity Sewers and Accessories: Lay all pipes with minimum Type 5 – Class B or C bedding unless shown or specified otherwise. Excavate the bottom of the trench flat at a minimum depth as shown on the Drawings, below the bottom of the pipe barrel. Place and compact bedding material to the proper grade before installing the pipe. After pipe has been brought to the proper grade, haunching material shall be carefully placed by hand and compacted to the top of the pipe.

C. Manholes: Excavate to a minimum of 12-inch below the planned elevation of the base of the manhole. Place and compact crushed stone bedding material to the required grade before constructing the manhole.

D. At pipe subgrade, if foundation soil in trench is soft, wet, spongy, and unstable or does not afford solid foundation for pipe, the Contractor shall excavate as instructed by Engineer and provide stable base for placement of pipe bedding. Quantities of in-place crushed rock bedding which are in excess to those required on Drawings will be paid on basis of Unit Prices listed in Bid Form.

E. Where rock has been excavated in the trench, the Contractor shall construct a base by placing crushed rock upon which a subgrade can be prepared. Crushed rock bedding in excess to that shown on Drawings will be paid for on basis of Unit Prices listed in Bid Form.

F. Before any pipe is lowered in place, the trench bottom or bedding shall be prepared so that each pipe will have a firm and uniform bearing over the entire length of the barrel and a width equal to one-half the outside diameter of the pipe. All adjustments in line and grade shall be made by scraping away or filling and tamping in under the barrel of the pipe. Wedging and/or blocking are not permitted.

3.13 PIPE AND UTILITY TRENCH BACKFILL

A. Pipe Zone Backfill:

1. The pipe zone is defined as that portion of the vertical trench cross-section lying between a plane below the bottom surface of the pipe and a plane at a point above the top surface of the pipe. The bedding is defined as that portion of pipe zone, backfill material between the trench subgrade and the bottom of the pipe. The embedment is defined as that portion of the pipe zone backfill material between the bottom of the bedding and a level line of initial backfill (12" above the top of pipe).

2. After compacting the bedding, the Contractor shall perform a final trim using a stringline for establishing grade, such that each pipe section when first laid will be continually in contact with the bedding along the extreme bottom of the pipe. Excavation for pipe bells and welding shall be made as required.

3. The pipe zone shall be backfilled with the indicated backfill material. The Contractor shall exercise care to prevent damage to the pipeline coating, cathodic bonds, and the pipe itself during the installation and backfill operations.

4. If a moveable trench shield is used during backfill operations, the shield shall be lifted to a location above each layer of backfill material prior to compaction of the layer. The Contractor shall not displace the pipe or backfill while the shield is being moved.

5. Selected backfill material for the pipe zone shall consist of hereinbefore specified material or native or imported granular material as approved by Engineer in advance of placement. Place material in the trench simultaneously on each side of the pipe for the full width of the trench and the depth of the pipe zone in layers 6-inches in depth. Each layer shall be thoroughly compacted by tamping. In all cases, backfilling of the pipe zone must be done by hand. Particular attention shall be given to underside of the pipe and fittings to provide a firm support along the full length of the pipe. The pipe zone shall be considered to extend 12-inches above the top of the pipe, and shall be compacted to a compaction of not less than 98 percent of maximum dry density at optimum moisture content as herein after specified. Care shall be taken not to damage pipe or special coatings on the pipe.

B. Trench Zone Backfill:

After the pipe zone backfills have been placed, backfilling of the trench zone may proceed. The trench zone is defined as that portion of the vertical trench cross-section lying as indicated between a plane above the top surface of the pipe and a plane at a point 18 inches below the finished surface grade, or if the trench is under pavement, 18 inches below the

roadway subgrade. If flooding, ponding, or jetting is used, the pipe shall be filled with water to prevent flotation.

C. Backfilling Pipe Trench: After the pipe had been laid in the trench and has been inspected and approved, and backfilling in the pipe zone is complete and compacted, the remainder of the trench may be backfilled. The backfill material shall be suitable material as hereinbefore specified. Care shall be taken to insure that no voids remain under, around or near the pipes.

D. Compaction: The maximum dry density and optimum moisture content of each soil type used in the controlled compacted fill shall be determined by ASTM D698 compaction method. Field density tests shall be determined in accordance with ASTM D1556. Testing shall be paid for separately by the City directly to the testing laboratory.

E. Placement and Compaction of Trench Backfill: The placement and compaction of all trench backfill shall conform to one of the following methods, subject to the qualification specified therein:

1. Mechanically Compacted Backfill (Unpaved Areas):. With approval of Engineer, backfill shall be mechanically compacted by means of tamping rollers, sheepsfoot rollers, pneumatic tire rollers, vibrating rollers, or other mechanical tampers to a minimum of 95 percent at optimum moisture. Trench backfill compaction above the pipe zone shall be to a minimum 98 percent in areas under buildings and pavements. Where the backfill soil has had a clay-like behavior and has a plasticity index of at least 12, only the upper 3-feet of material placed will require minimum compaction of 98 percent. All such equipment shall be of size and type approved by the Engineer. Impact-type pavement breakers (stompers) will not be permitted over any pipe. Permission to use specific compaction equipment shall not be construed as guaranteeing or implying that the use of such equipment will not result in damage to adjacent ground, existing improvements, or improvements installed under the Contract. The Contractor shall make its own determination in this regard. Mechanically compacted backfill shall be placed in horizontal layers not exceeding the maximum thickness of 8 inches. Each layer shall be evenly spread, the moisture content brought to near optimum condition and then tamped or rolled until the specified compaction and moisture content had been attained.

2. Graded Aggregate Base (Paved Areas) – See Appendix F - Department of Public Works Public Right of Way Manual.

F. Additional Material: Where final grades above the pre-construction grades are required to maintain minimum cover, additional fill material will be shown on the Drawings. Utilize excess material excavated from the trench, if the material is suitable. No additional payment will be made for additional

material when excavated materials are used. If excess excavated materials are not suitable, or if the quantity available is not sufficient, provide additional suitable fill material.

G. Final Backfill: Final backfill is all backfill in the trench cross-sectional area within 18 inches of finished grade, or if the trench is under pavement, all backfill within 18 inches of the roadway subgrade.

3.14 BACKFILLING AROUND STRUCTURES

A. General:

1. Remove debris from excavations before backfilling.

2. Do not backfill against foundation walls until so instructed by the Engineer.

3. Wherever possible, backfilling shall be simultaneous on both sides of walls to equalize lateral pressures.

4. Do not backfill on only one (1) side of vertically spanning walls unless walls are adequately shored or permanent construction is in place to furnish lateral support on both top and bottom of wall.

3.15 FIELD TESTING

A. General: All field soils testing will be done by a testing laboratory of the City's direction except as indicated below. Testing shall be paid for separately by the City.

B. Where soil material is required to be compacted to a percentage of maximum density, the maximum density at optimum moisture content will be determined in accordance with Method C of ASTM D 1557. Where cohesionless, free draining soil material is required to be compacted to a percentage of relative density, the calculation of relative density will be determined in accordance with ASTM D 4253 and D 4254. Field density in-place tests will be performed in accordance with ASTM D 1556 - Standard Test Method for Density and Unit Weight of Soil in Place by the Sand-Cone Method, ASTM D 2922 - Standard Test Methods for Density of Soil and Soil-Aggregate in Place By Nuclear Methods (Shallow Depth), or by such other means acceptable to the Engineer.

C. In case the test of the fill or backfill show non-compliance with the required density, the Contractor shall accomplish such remedy as may be required to insure compliance. Subsequent testing to show compliance shall be by a testing laboratory selected by the City and paid by the Contractor.

D. The Contractor shall provide test trenches and excavations including excavation, trench support, and groundwater removal for the City's field soils testing operations. The trenches and excavations shall be provided at the locations and to the depths required by the City.

3.16 GRADING

A. General:

1. Perform all rough and finish grading required to attain the elevations indicated on the Drawings.

2. Perform rough grading to an accuracy of plus or minus 0.15 feet.

B. Grading Around Buildings: Control the grading around buildings so the ground is pitched to prevent water from running into the excavated areas of a building or damaged other site features.

C. Treatment After Completion of Grading:

1. After grading is completed, permit no further excavation, filling or grading, except with the approval of the Engineer.

2. Use all means necessary to prevent the erosion of freshly graded areas during construction and until such time as permanent drainage and erosion control measures have been installed.

3.17 EXCESS WATER CONTROL

A. Regulations and Permits: Obtain all necessary soil erosion control permits in accordance with the Georgia Soil Erosion and Sedimentation Control Act, and all pertinent rules, laws, and regulations.

B. Unfavorable Weather:

1. Do not place, spread, or roll any fill material during unfavorable weather conditions.

2. Do not resume operations until moisture content and fill density are satisfactory to the Engineer.

3. Any inundated area that freezes shall be removed and refilled at no additional cost to the City.

C. Provide berms or channels to prevent flooding of subgrade. Promptly remove all water collected in depression.

D. Pumping, Drainage and Dewatering:

1. Provide, maintain and use at all times during construction adequate means and devices to promptly remove and dispose of all water from every source entering the excavations or other parts of the Work

2. Dewater by means that will insure dry excavations, preserve final lines and grades, and do not disturb or displace adjacent soil.

3. All pumping and drainage shall be done with no damage to property or structures and without interference with the rights of the public, owners of private property, pedestrians, vehicular traffic or the work of other contractors, and in accordance with all pertinent laws, ordinances, and regulations.

4. Do not overload or obstruct existing drainage facilities.

3.18 SETTLEMENT

A. The Contractor shall be responsible for all settlement of backfill, fills, and embankments, which may occur within one (1) year after final acceptance of the Work by the City.

B. The Contractor shall make, or cause to be made, all repairs, or replacements made necessary by settlement within thirty (30) days after receipt of written notice from the Engineer.

3.19 CLEANING

A. Upon completion of the Work of this Section, remove all rubbish, trash, and debris resulting from construction operations. Remove surplus equipment and tools. Leave the site in a neat and orderly condition acceptable to the engineer, and in conformance with the General Conditions of the Contract Documents.

END OF SECTION

(This page is intentionally blank)

SECTION 02224

JACK AND BORE OR TUNNEL INSTALLATION

PART 1 GENERAL

1.01 SCOPE

A. The work covered by this Section includes furnishing all labor, materials, equipment and incidentals required to jack and bore a casing or construct a tunnel and to complete pipeline construction as described herein and as shown on the Drawings.

B. The Contractor has the option to use either excavation method (i.e, jack and bore a casing or construct a tunnel) to complete the crossings as shown on the Drawings.

C. Supply all materials and perform all work in accordance with applicable American Society for Testing and Materials (ASTM), American Water Works Association (AWWA), American National Standards Institute (ANSI) or other recognized standards. Latest revisions of all standards are applicable. If requested by the Engineer, submit evidence that manufacturer has consistently produced products of satisfactory quality and performance over a period of at least two years.

1.02 QUALITY ASSURANCE

A. Reference Standards: The Contractor shall comply with the applicable provisions and recommendations of the latest editions of the following standards, except as otherwise shown on the Drawings or specified herein.

1. AASHTO M190 – Standard Specification for Bituminous Coated Corrugated Metal Culvert Pipe and Pipe Arches

2. ASTM A36 – Standard Specification for Carbon Structural Steel

3. ASTM A123 – Standard Specification for Zinc (Hot-Dip Galvanized) Coatings on Iron and Steel Products

4. ASTM A153 – Standard Specification for Zinc Coating (Hot-Dip) on Iron and Steel Hardware

5. ASTM A307 – Standard Specification for Carbon Steel Bolts and Studs, 60,000 psi Tensile Strength

6. ASTM A1011 – Standard Specification for Steel, Sheet and Strip, Hot-Rolled Carbon, Structural, High-Strength, Low-Alloy, High-Strength Low-Alloy with Improved Formability and Ultra-High Strength.

1.03 SUBMITTALS

A. Submittals shall be made in accordance with the requirements of the General Conditions of the Contract Documents. In addition, the following specific information shall be provided:

B. Method Submittals: The Contractor shall provide for the Engineer's approval, detailed plans for the methods proposed for the installation of the casing or construction of the tunnel. These plans shall address the following:

1. Groundwater Control: The Contractor shall control groundwater throughout the installation of the casing or construction of the tunnel. The groundwater shall be controlled by dewatering (well points, sumps, or deep wells), grouting, freezing or other methods approved by the Engineer. The Contractor shall prepare a written, detailed plan for controlling the groundwater, citing similar installation conditions and results. This plan shall be submitted to the Engineer prior to any construction for the casing or tunnel.

2. Face Protection: The face of the excavation shall be protected from the collapse of the soil into the casing or tunnel.

3. Pit Design: The design of the jacking and receiving pits and required bearing to resist the jacking force is the responsibility of the Contractor. The Contractor shall engage the services of a professional engineer with current registration in the State of Georgia to design all cofferdam and sheeting and bracing systems for the jacking and receiving pits. The Contractor’s Engineer shall submit to the Engineer a signed statement that he has been employed by the Contractor to design the cofferdam and sheeting and bracing systems.

4. Submit additional working drawings, written procedures and calculations describing in detail the proposed jack and bore or tunneling method and the entire operation. Additional submittals shall include, but not be limited to, ground stabilization if proposed, excavation procedures, control of casing alignment and grade, support of face, detection of surface movement, procedure for installing pipes and anchors and placement of grout between the pipe and the casing and in the annular space around the tunnel. If, in opinion of the Contractor, modifications to the methods are required during construction, working drawings shall be submitted delineating such modifications, including reasons for the modifications.

C. Material Submittals: The Contractor shall provide for the Engineer's approval, shop drawings, proposed construction drawings and other pertinent specifications and product data as follows:

1. Shop drawings for casing pipe and tunnel liner plate showing sizes and connection details.

2. Design mixes for concrete and grout.

3. Casing Spacers.

D. Experience Submittals: Jacking and boring casings and tunnel construction are deemed to be specialty contractor work. If the Contractor elects to perform the work, the Contractor shall provide evidence of experience as required by the General Conditions. A minimum of five continuous years of experience in installation of steel casings and tunnel construction is required of the Contractor proposed to do the work. Evidence of this experience shall be provided with the shop drawings for review by the Engineer.

1.04 STORAGE AND PROTECTION

A. All materials shall be stored and protected in accordance with the manufacturer's recommendations and as approved by the Engineer.

1.05 PROJECT PERMITS

A. The City has obtained permits as specified in Section 01060 of these specifications. The Contractor’s attention is directed to the requirements and conditions contained in the permits. All costs imposed by the Georgia Department of Transportation or the railroad or other agencies as a requirement for the Contractor to complete the required scope of work will be paid for by the Contractor.

PART 2 PRODUCTS

2.01 MATERIALS AND CONSTRUCTION

A. Casing

1. The casing shall be new pipe made from steel plate having minimum yield strength of 35,000 psi. The steel plate shall also meet the chemical requirements of ASTM A36.

2. The outside of the casing pipe shall be coated with coal tar epoxy having a minimum dry film thickness of 16 mils. Surface preparation shall be SSPC-SP-10. Epoxy shall have a minimum solids content of 65 percent by volume and shall be air or airless spray applied. The minimum drying

time for the epoxy shall be seven days. Brushing shall be permitted in small areas only. All coating and recoating shall be done in strict accordance with the manufacturer's recommendations. Epoxy shall be Tnemec, Kop-Coat or Valspar.

3. The thicknesses of casings shown in the following table are minimum thicknesses. The actual thicknesses shall be determined by the casing installer, based on an evaluation of the required forces to be exerted on the casing when jacking. Any buckling of the casing due to jacking forces shall be repaired at no additional cost to the City.

4. The diameters of the casings shown in the following table and shown on the Drawings are minimum diameters. Larger casings, with the Engineer's approval, may be provided at no additional cost to the City, for whatever reasons the Contractor may decide, whether due to casing size availability, line and grade tolerances, soil conditions, etc.

B. Casing Sizes

1. Under Railroads:

Pipe Diameter, Inches	Casing Diameter, Inches	Wall Thickness, Inches (Uncoated)
6	14	0.282
8	18	0.313
10	20	0.344
12	22	0.375
14	24	0.407
16	30	0.469
18	30	0.469
20	32	0.501
24	36	0.532
30	42	0,563
36	48	0.688

42	54	0.813
48	60	0.876
54	66	1.000
60	72	1.125
64	76	1.125

2. Under Highways:

Pipe Diameter, Inches	Casing Diameter, Inches	Wall Thickness, Inches
6	12	0.250
8	16	0.250
10	16	0.250
12	18	0.250
14	22	0.250
16	24	0.250
18	30	0.312
20	30	0.312
24	36	0.375
30	42	0.375
36	48	0.500
42	56	0.500
48	60	0.500
54	66	0.750

60	72	0.750
64	78	1.000

C. Tunnel Liner

1. Tunnel liner plate shall consist of structural steel liner plates. Each section shall be composed of the number of plates required to produce a clearance around the pipe sufficient to install and properly joint the pipe. The liner plates shall be either 4-flange type or 2-flange lap-joint type.

2. Liner plates shall be fabricated from structural quality, hot-rolled carbon steel sheets or plates conforming to ASTM A1011.

3. Liner plates shall be galvanized in accordance with ASTM A123. All other hardware shall be hot dip galvanized in accordance with ASTM A153. Liner plates shall be bituminous coated in accordance with the requirements of AASHTO M190.

4. All liner plates shall be punched for bolting on both longitudinal and circumferential seams or joints and shall be so fabricated as to permit complete erection from inside the tunnel. All plates shall be of uniform fabrication and those intended for one size tunnel shall be interchangeable.

5. The plates shall be furnished with 2-inch diameter grout holes to facilitate grouting the annular space above and around the tunnel liner. All grout holes shall be equipped with screw type galvanized plugs for final watertight closure of the grout holes. Grout holes shall be spaced as shown on the Drawings.

6. Bolts and Nuts:

   a. Bolt spacing shall be as specified by the plate manufacturer and shall be sufficient to develop the full strength of the plates.
   b. Bolts and nuts used with the 2-flange plates shall be a minimum of 5/8-inch in diameter and shall conform to ASTM A307
   c. Bolts and nuts used with 4-flange plates shall be not less than ½-inch in diameter for plate thicknesses up to and including 0.179-inches (7 gage) and not less than 5/8-inch in diameter for plates of greater thickness. The bolts and nuts shall be quick acting coarse thread and shall conform to ASTM A307.
   d. Where required, bolts and nuts shall be hot dipped galvanized in accordance with ASTM A153.

D. Casing Spacers

1. Casing spacers shall meet one of the following requirements:

   a. Casing spacers shall be flanged, bolt-on style with a two-section stainless steel shell lined with a PVC liner, minimum 0.09-inch thick also having a hardness of 85-90 durometer. Runners shall be attached to stainless steel risers which shall be properly welded to the shell. The height of the runners and risers shall be manufactured such that the pipe does not float within the casing. Casing spacers shall be manufactured by Cascade Waterworks Manufacturing Company, Advanced Products & Systems, Inc., or approved equal.
   b. Casing spacers shall be a two-section, flanged, bolt on style constructed of heat fused PVC coated steel, minimum 14 gauge band and 10 gauge risers, with 2-inch wide fiberglass reinforced polyester insular duty PVC inner liner, minimum 0.09-inch thick, having a hardness of 85-90 durometer, and all stainless steel hardware. Casing spacer shall be manufactured by Pipeline Seal and Insulator, Ltd., or approved equal.

2. Casing spacers shall be designed for the general configuration shown on the Drawings, including provisions for other conduits to be installed within the casing in addition to the carrier pipe.

E. Grout: Grout shall be used for filling the void between the casing and the carrier pipe. Cement shall conform to ASTM C150, Type I or II. Grout shall have a minimum compressive strength of 100 psi attained within 24 hours.

F. Carrier Pipe: Carrier pipes shall be as specified in Section 02665, Water Mains and Accessories; Section 02667, Large Water Transmission Mains and Section 02537, Ductile Iron Sanitary Sewer Pipe and Fittings. All joints of pipe in the casing shall be restrained.

G. Surface Settlement Markers: Surface settlement markers within pavement areas shall be P.K. nails. Surface settlement markers within non-paved areas shall be wooden hubs.

2.02 EQUIPMENT

A. Casings

1. A cutting head shall be attached to a continuous auger mounted inside the casing pipe.

2. On casing pipe for water lines over 60 feet in length, the installation equipment shall include a steering head and a grade indicator.

3. The steering head shall be controlled manually from the bore pit. The grade indicator shall consist of a water level attached to the casing which

will indicate the elevation of the front end of the casing or some other means for grade indication approved by the Engineer.

4. The steering head and grade indicator shall utilize a laser guidance system.

B. Tunnels

1. Tunnel Boring Machine (TBM)

a. The TBM shall be equipped with disc cutters of diameter 19 inches or greater designed for operation at thrusts of up to 70 kips per cutter.
b. The TBM shall afford adequate protection against loss of ground and permit ground support adjacent to the tunnel face, as required by ground conditions.
c. The TBM shall be equipped with a dust control system which includes a water spray system, dust shield and dust scrubber system.
d. The method used to advance the TBM shall ensure its correct alignment at all times, without binding or imposing excessive loads on the primary tunnel supports or upon the surrounding ground.
e. The TBM shall be equipped with a roll indicator and laser target system, which allows the operator to observe the machine's alignment and orientation (predictor system) from the control station.

f. The TBM shall be grounded in accordance with the latest requirements of the National Electrical Code and equipped with ground fault protection.

2. Other Tunneling Equipment

a. Power machinery and tools within the tunnel shall be operated by either electricity, compressed air, diesel with approved scrubber or other approved power. Electrical tools and equipment shall be grounded in accordance with the latest requirements of the National Electrical Code.
b. All electrical equipment and power receptacles shall have appropriate ground fault protection.
c. Provide temporary electrical lights to properly and safely illuminate all parts of the shafts and tunnel including special illumination at the working face. Lighting circuits shall be thoroughly insulated and separated from power circuits, and lights shall be enclosed in wire cages. Secure electrical permits required for completion of this work.

PART 3 EXECUTION

3.01 GENERAL

A. Interpretation of soil investigation reports and data, investigating the site and determination of the site soil conditions prior to bidding is the sole responsibility of the Contractor. Rock and/or water, if encountered, shall not entitle the Contractor to additional compensation.

B. Boring and jacking casing and tunnel construction shall be performed so as not to interfere with, interrupt or endanger roadway surface and activity thereon, and minimize subsidence of the surface, structures and utilities above and in the vicinity of the work. Support the ground continuously in a manner that will prevent loss of ground and keep the perimeters and face of the casing, passages and shafts stable. The Contractor shall be responsible for all settlement resulting from operations and shall repair and restore damaged property to its original or better condition at no cost to the City.

3.02 GROUNDWATER CONTROL

A. The Contractor shall control the groundwater throughout the installation of the casing or construction of the tunnel.

B. When water is encountered, provide and maintain a dewatering system of sufficient capacity to remove water on a 24-hour basis keeping excavations free of water until the backfill operation is in progress. Dewatering shall be performed in such a manner that removal of soil particles is held to a minimum. Dewater into a sediment trap and comply with requirements specified in Section 02125, Temporary and Permanent Erosion and Sedimentation Control.

C. Methods of dewatering shall be at the option and responsibility of the Contractor. Maintain close observation to detect settlement or displacement of surface facilities due to dewatering. Should settlement or displacement be detected, notify the Engineer immediately and take such action as necessary to maintain safe conditions and prevent damage.

3.03 SAFETY

A. Provide all necessary bulkheads and shields to ensure complete safety to all traffic, persons and property at all times during the work. Perform the work in such a manner as to not permanently damage the roadbed or interfere with normal traffic over it in those areas immediately adjacent and outside the active project work area.

B. Observe and comply with all applicable requirements of GDOT. Conduct the operations in such a manner that all work will be performed below the level of the roadbed.

C. Perform all activities in accordance with the Occupational Safety and Health Act of 1970 PL-596), as amended, applicable regulations of the Federal

Government, OSHA 29CFR 1926 and applicable criteria of ANSI A10.16-81, "Safety Requirements for Construction of Tunnel Shafts and Caissons".

3.04 HIGHWAY CROSSINGS

A. The Contractor shall be held responsible and accountable for the coordination and scheduling of all construction work within the highway right-of-way and the posting of all appropriate permits.

B. Work along or across the highway right-of-way shall be subject to inspection by the highway department.

C. All installations shall be performed to leave free flows in drainage ditches, pipes, culverts or other surface drainage facilities of the highway, street or its connections.

D. No excavated material or equipment shall be placed on the pavement or shoulders of the roadway without the express approval of the highway department

E. The Contractor will not be permitted to leave equipment (trucks, backhoes etc.) on the pavement or shoulder overnight. Construction materials to be installed, which are placed on the right-of-way in advance of construction, shall be placed in such a manner as not to interfere with the safe operation of the roadway.

3. 05 RAILROAD CROSSINGS

A. The Contractor shall secure permission from the railroad to schedule work so as to not interfere with the operation of the railroad.

B. Additional insurance is required for each railroad crossing. The Contractor shall furnish the railroad with such additional insurance as may be needed. The cost of such additional insurance shall be borne by the Contractor.

C. All work on the railroad right-of-way, including necessary support of tracks, safety of operations and other standard and incidental operation procedures may be under the supervision of an authorized representative of the railroad and any decisions of this representative pertaining to construction and/or operations shall be final and construction must be governed by such decisions.

D. If, in the opinion of the railroad, it becomes necessary to provide flagging protection or watchmen for the performance of any other work in order to keep the tracks safe for traffic, the Contractor shall coordinate such work and shall reimburse the railroad for such services, in accordance with procedures agreed upon by the Contractor and the railroad before construction is started.

E. No blasting shall be permitted within the railroad right-of-way.

3.06 SURFACE SETTLEMENT MONITORING

A. Provide surface settlement markers, placed as specified and as directed by the Engineer. The Contractor shall place settlement markers outside of pavement area, along the centerline of the casing or tunnel at 20 foot intervals. Markers shall also be placed at each shoulder of the roadway, at each edge of pavement, at the centerline of the pavement and at 10 and 25 feet offset in each direction from the centerline of the casing. Tie settlement markers to bench marks and indices sufficiently removed as not to be affected by the Contractor's operations.

B. Make observations of surface settlement markers, placed as required herein, at intervals acceptable to the Engineer. In the event settlement or heave on any marker exceeds 1-inch, the Contractor shall immediately cease work and using a method approved by the Engineer, take immediate action to restore surface elevations to those existing prior to start of Contractor's operations.

C. Take readings and permanently record surface elevations prior to start of dewatering operations and/or shaft excavation. The following schedule shall be used for obtaining and recording elevation readings: all settlement markers, once a week; all settlement markers within 50 feet of the casing or tunnel heading, at the beginning of each day; more frequently at the Engineer's direction if settlement is identified. Make all elevation measurements to the nearest 0.01 foot.

D. The Contractor shall cooperate fully with jurisdictional personnel. Any settlement shall be corrected by, and at the expense of, the Contractor.

E. Promptly report any settlement and horizontal movement immediately to the Engineer and take immediate remedial action, at no cost to the City.

3.07 JACKING AND BORING

A. Pit

1. Conduct jacking and boring operations from a pit excavated at one end of the section to be bored. Where conditions and accessibility are suitable, place the jacking pit on the downstream end of the bore.

2. The pit shall be rectangular and excavated to a width and length required for ample working space. If necessary, sheet and shore the pit properly on all sides. Pit sheeting shall be timber or steel piling of ample strength to safely withstand all structural loadings of whatever nature due to site and soil conditions. Keep pit dry during all operations. Perform pit dewatering operations as necessary.

3. The bottom of the pit shall be firm and unyielding to form an adequate foundation upon which to work. In the event the pit bottom is not stable, excavate to such additional depth as required and place a gravel sub-base or a concrete sub-base if directed by the Engineer due to soil conditions.

B. Jacking Rails and Frame

1. Set jacking rails to proper line and grade within the pit. Secure rails in place to prevent settlement or movement during operations. The jacking rails shall cradle and hold the casing pipe on true line and grade during the progress of installing the casing.

2. Place backing between the heels of jacking rails and the rear of the pit. The backing shall be adequate to withstand all jacking forces and loads.

3. The jacking frame shall be of adequate design for the requirements of the Project. Apply thrust to the end of the pipe in such a manner to impart a uniformly balanced load to the pipe barrel without damaging the joint ends of the pipe.

C. Jacking and boring of casing pipes shall be accomplished by the dry auger boring method without jetting, sluicing or wet boring.

D. Auger the hole and jack the casing through the soil simultaneously.

E. Bored installations shall have a bored-hole diameter essentially the same as the outside diameter of the casing pipe to be installed.

F. Execute boring ahead of the casing pipe with care, commensurate with the rate of casing pipe penetration. Boring may proceed slightly in advance of the penetrating pipe and shall be made in such a manner to prevent any voids in the earth around the outside perimeter of the pipe. Make all investigations and determine if the soil conditions are such as to require the use of a shield.

G. As the casing is installed, check the horizontal and vertical alignment frequently. Make corrections prior to continuing operation.

H. Any casing pipe damaged in jacking operations shall be repaired, if approved by the Engineer, or removed and replaced at Contractor's own expense.

I. Lengths of casing pipe, as long as practical, shall be used except as restricted otherwise. Joints between sections shall be completely welded in accordance with AWS recommended procedures. Prior to welding the joints, the Contractor shall ensure that both ends of the casing sections being welded are square.

J. The Contractor shall prepare a contingency plan which will allow the use of a casing lubricant, such as bentonite, in the event excessive frictional forces jeopardize the successful completion of the casing installation.

K. Once the jacking procedure has begun, it should be continued without stopping until completed, subject to weather and conditions beyond the control of the Contractor.

L. Care shall be taken to ensure that casing pipe installed by boring and jacking method will be at the proper alignment and grade.

M. The Contractor shall maintain and operate pumps and other necessary drainage system equipment to keep work dewatered at all times.

N. The carrier pipe shall be installed to the line and grade required within the casing and after placed and approved by the Engineer, the space between the outside of the carrier pipe and the casing shall be completely filled with grout pumped in a continuous operation in a manner to prevent the occurrence of any voids between the carrier pipe and the casing.

O. Adequate sheeting, shoring and bracing for embankments, operating pits and other appurtenances shall be placed and maintained to ensure that work proceeds safely and expeditiously. Upon completion of the required work, sheeting, shoring and bracing shall be left in place, cut off or removed, as directed by the Engineer.

P. Refer to Section 02225, Trench Excavation and Backfill for additional information related to trench excavation, all classes and types of excavation, the removal of rock, muck and debris, and the excavation of all working pits and backfill.

Q. All surplus material shall be removed from the right-of-way and the excavation backfilled and compacted flush with the surrounding ground.

R. Grout backfill shall be used for unused holes or abandoned pipes.

S. Any replacement of carrier pipe in an existing casing shall be considered a new installation, subject to the applicable requirements of these specifications

3.08 FREE BORE

A. Where the Drawings indicate a pipeline is to be installed by boring without a casing, the Contractor shall construct the crossing by the free bore method. The free bore method shall be accomplished by the dry auger method. The free bore method shall be accomplished by the dry auger boring method without jetting, sluicing or wet boring.

B. The diameter of the free bore shall not exceed the pipe bell outside diameter or the pipe barrel outside diameter plus 1-inch, whichever is greater.

C. Free boring, where indicated on the Drawings, shall be performed at the Contractor's option. The Contractor may choose to construct the crossing by the conventional jack and bore casing method. If the Contractor chooses this method, it will be at no additional cost to the City.

D. The Contractor will be responsible for any settlement of the roadway caused by the free bore construction activities.

3.09 TUNNELS

A. Shaft Excavation

1. Excavate in such a manner that over break is held to a minimum. In soil and mixed face conditions, install primary support in continuous and close contact with the excavated surface to control water inflow and prevent ground loss, so that adjacent structures are not affected by ground movements. Excavation in soil shall not be advanced ahead of the previously installed primary support any more than is necessary for the installation of the succeeding section of primary support.

2. Whenever shaft sinking is suspended, complete primary support to the excavated surfaces and keep any dewatering system operating. The Contractor shall have qualified personnel periodically check conditions that might threaten the excavation stability.

3. Remove excavated soil and rock from the site and dispose of properly at a location secured by the Contractor.

4. Remove sheeting used for shoring from the shaft and off the job site. The removal of sheeting, shoring and bracing shall be done in such a manner as not to endanger or damage either new or existing structures, private or public properties and also to avoid cave-ins or sliding in the banks.

B. Tunnel Excavation

1. Excavate in such a manner that over break is held to a minimum.

2. Where water inflows in the tunnel face are large and increasing, the Engineer may instruct the Contractor to drill probe holes, relief holes and ground treatment holes in the tunnel face, and to carry out consolidation grouting before proceeding.

3. Whenever tunneling is suspended, complete installation of the primary support for that excavation cycle. Have qualified personnel periodically check conditions that might threaten tunnel stability.

4. Remove excavated rock from the excavation of the TBM erection, transit and reception chambers and dispose of properly at a location secured by the Contractor.

C. Liner Installation

1. The liner plates shall be installed progressively as excavation proceeds. Excavation shall not continue more than 24 inches past the end of the liner plate already in place. At this time an additional section of liner shall be installed before excavation shall continue.

2. Grout shall be placed under pressure in the annular space outside the tunnel as the excavation proceeds. Grout should be continuously placed as close to the heading as possible, using grout stops if necessary. Grout shall be injected in the lower holes first, moving upward as the annular space is filled. Screw type plugs shall be installed after filling each grout hole.

3.10 VENTILATION AND AIR QUALITY

A. Provide, operate and maintain for the duration of project, a ventilation system to meet safety and OSHA requirements.

3.11 ROCK EXCAVATION IN CASING

A. In the event that rock is encountered during the installation of the casing pipe which, in the opinion of the Engineer, cannot be removed through the casing, the Engineer may authorize the Contractor to complete the crossing with a tunnel.

B. At the Contractor's option, the Contractor may continue to install the casing and remove the rock through the casing at no additional cost to the City.

3.12 INSTALLATION OF PIPE IN CASING

A. After installation of the casing is complete, and has been accepted by the Engineer, install the pipeline in accordance with the Drawings and Specifications.

B. Check the alignment and grade of the casing and submit a plan to the Engineer for approval to set the pipe at proper alignment, grade and elevation, without any sags or high spots.

C. The carrier pipe shall be held in the casing by the use of casing spacers. The casing spacers shall be designed by the Contractor such that the pipe can be installed in the casing. Provide a minimum of two casing spacers per length of pipe, unless directed otherwise by the Engineer.

D. Close the ends of the casing with 4-inch brick walls, plastered with portland cement mortar and waterproofed with asphaltic roofing cement.

3.13 INSTALLATION OF PIPE IN TUNNEL

A. After the tunnel is complete and has been accepted by the Engineer, install the pipeline in accordance with the Drawings and Specifications

B. Check the alignment and grade of the tunnel and submit a plan to the Engineer for approval to set the pipe at proper alignment, grade and elevation, without any sags or high spots.

C. Care shall be taken to prevent damage to the flanges of the tunnel liner plates.

D. The Contractor shall be responsible for all bad joints including joints disturbed by placing the pipe in the tunnel.

E. 3000 psi concrete as specified in Section 03300 shall used for constructing the tunnel invert.

F. A method approved by the Engineer shall be used to support the pipe so that the weight of the pipe is not resting on the pipe bells

G. Close the ends of the tunnel with 4-inch brick walls, plastered with portland cement mortar and waterproofed with asphaltic roofing cement.

3.14 SHEETING REMOVAL

A. Remove sheeting used for shoring from the shaft and off the job site. The removal of sheeting, shoring and bracing shall be done in such a manner as not to endanger or damage either new or existing structures, private or public properties and also to avoid cave-ins or sliding in the banks.

3.15 INTERSTATE RESTORATION

A. When boring and jacking or tunneling operations encroach upon the right of way of the federal interstate system, the Contractor shall restore all screening trees with seedlings of like species.

3.16 CLEANUP

A. Backfill materials shall be as specified in Section 02225. The site shall then be restored to its original condition or better.

+ + + END OF SECTION 02224 + + +

SECTION 02270

Vegetative Erosion Control and Bank Stabilization

PART 1 – GENERAL

1.01 SCOPE

A. The Contractor shall provide, install and maintain erosion control and streambank stabilization in accordance with the "Manual for Erosion and Sediment Control in GA", latest edition. This includes, but is not limited to vegetative best management practices [dust control (Du), disturbed area stabilization (Ds1, Ds2, Ds3, Ds4), erosion control matting and blankets (Mb)], construction exit (Co) and stream bank stabilization (Sb) for all disturbed areas.

1.02 REFERENCED SPECIFICATIONS, CODES, AND STANDARDS

A. This section is related to the following specification sections.

1. SECTION 02125: Erosion and Sediment Control
2. SECTION 02273: Riprap

B. This section references the following commercial standards:

1. "Manual for Erosion and Sediment Control in Georgia", published by the Georgia Soil and Water Conservation Commission (4310 Lexington Road, Athens, Georgia 30603), which is available on the Internet as a free download at http://www.gaswcc.org.

2. "Guidelines for Streambank Restoration", published by the Georgia Soil and Water Conservation Commission (4310 Lexington Road, Athens, Georgia 30603) in cooperation with Metro Atlanta Association of Conservation Districts, USDA Soil Conservation Service (now Natural Resources Conservation Service or NRCS), and the Georgia Environmental Protection Division.

3. The City of Atlanta Riparian Buffer Re-vegetation Guidelines.

1.03 CONTRACTOR SUBMITTALS

A. General: Submittals shall be furnished in accordance with Section GC-28 – Working Drawings, Shop Drawings, Data on Material and Equipment, Samples and Licenses.

B. Product Information:

1. 1. Manufacturer's product information for erosion control fabrics, geo-textile fabrics (natural and synthetic fiber) and cellular confinement systems must be provided to the Engineer for written approval, prior to installation on any project site. Silt fence fabrics (QPL#36), matting (QPL#49), and blanket (QPL#62) materials must be from GA Department of Transportation Qualified Products List.

2. Information regarding the composition, infiltration rate, and chemical analysis of soil amendments including, but not limited to, fertilizer (natural and synthetic), agricultural lime, plant material compost, leaf or straw mulch, and peat moss must be provided to the Engineer for written approval prior to installation on any project site.

3. Information regarding the species mix and germination rates of erosion control grass seed mixes must be provided to the Engineer for written approval prior to installation on any project site.

.

C. Certificates:

1. Supplier or manufacturer's certificates, stating the source, quantity, and type of material, shall accompany each delivery. All certificates shall be submitted to the Engineer at the time of delivery. No materials or products shall be left at the project site without first notifying the Engineer.

2. Certificates of inspection of commercial plant material, as may be required by Federal, state, local, or other authorities having jurisdiction, must accompany the plant material shipment and must be submitted to the Engineer at the time of delivery.

D. Reports:

1. Soil Fertility Test: Independent laboratory test results for pH, organic material, texture, soluble salts, nitrogen, phosphorus, potassium, iron and micro-nutrients.

1.04 SITE DISTURBANCE MINIMIZATION AND EROSION HAZARD REDUCTION

A. The Contractor shall be responsible for minimizing the amount of disturbed area on the site during construction. To accomplish this task the Contractor shall:

1. Install required temporary erosion control measures, as required to meet best management practices as specified in the "Manual For Erosion and Sediment Control in GA" prior to initiating any ground disturbing activities within the project site. The Contractor shall notify the Engineer when all temporary erosion control measures have been installed. The Engineer shall, within 24 hours following such notification, inspect all temporary erosion control measures installed by the Contractor. Following inspection the Engineer will notify the Contractor, in writing, that the installation of the temporary erosion control measures meets the Contract requirements and authorize the Contractor to proceed with ground-disturbing activities.

2. Limit site access to the approved site access locations shown on the Contract Drawings unless otherwise authorized in writing by the Engineer.

3. Limit the amount of exposed soils, in areas where vegetation removal is required, to the smallest practical area and for the shortest practical time period. See 1.04.B below.

4. Extract, salvage and store all woody vegetation that has to be removed during construction but which can be replanted following the completion of construction. Salvaged plant material shall be stored in a temporary nursery. The property Owner, in conjunction with the Engineer, shall designate the approved location of the temporary nursery area prior to the initiation of plant salvage activities. The Engineer will review and approve the Contractor's plant salvage methods prior to the initiation of plant salvage activities. The Contractor shall provide temporary irrigation as necessary to maintain healthy plants based on site and climate conditions at the temporary nursery location.

5. Salvage and stockpile onsite soils removed during clearing and grading activities and designated as suitable for reuse within the project site. All salvaged soil shall be covered with erosion control fabric or plastic to prevent wind or rainfall induced erosion and surrounded by perimeter containment with Sd1c. Protective covering shall be anchored around the edges of the stockpile area using sandbags or other anchoring systems as approved by the Engineer. No stockpiles will be allowed within state stream buffer or flood plain areas.

6. Protect all vegetation within the project site that has not been specifically identified for removal or that is outside of any areas designated for clearing, grading, or construction activities. Vegetation to be removed shall be identified and clearly marked

using florescent orange flagging (attached to each plant) or florescent orange paint prior to the public notice period.

a. Vegetation to be preserved shall include all existing vegetation vital to streambank stabilization that is not within a designated clearing, grading, or construction area.

b. Any vegetation providing food and/or critical habitat for any species listed as rare, threatened, or endangered by any Federal or state agencies shall be preserved. Such vegetation shall not be located within any areas of the project site designated for clearing, grading, or construction activities.

c. All vegetation within the delineated boundaries of jurisdictional or regulated wetland areas shall be preserved unless otherwise directed by the Engineer or as identified on the Contract Drawings. Any impacts to vegetation within delineated wetland area caused by or related to clearing, grading, or construction related activities within the project site shall be mitigated in accordance with applicable Federal, state, and/or local regulations. The Contractor shall be responsible for insuring that any Federal, state, or local permits required to alter delineated jurisdictional or regulated wetlands have been acquired and are included as part of the Contract Documents.

7. The Contractor shall establish all clearing limits within the project site in accordance with Contract Documents. Clearing limits shall be delineated in the field using “Hi-Vis Barrier Fencing” (available through Forestry Suppliers, Inc., 205 West Rankin Street, Jackson, MS 39201) or authorized substitute.

a. The barrier fence shall be installed by attaching the fence material to 6-foot metal fence posts driven into the ground a minimum of 2 feet at 6-foot intervals along the edge of those areas within the site that are not designated for clearing, grading, or construction related activities. The barrier fence shall be attached to the fence posts using loops of No. 9 wire; three loops spaced equidistant along each fence post.

b. The Contractor shall install barrier fence around all areas where existing vegetation is to be preserved or protected. Barrier fence is reusable and shall be removed after all construction-related activities within the project site have ceased or as directed by the Engineer.

B. The Contractor shall notify the Engineer when ground-disturbing activities have ceased within an area of the site where all construction activities (excluding those activities inside of structures) has been completed. This

notification shall occur within 24-hours following the completion of ground-disturbing activities. The Engineer shall inspect those areas and notify the Contractor, in writing, that the Contractor shall apply erosion control seed/mulch mixtures to reduce or eliminate erosion hazards within those disturbed areas. The Contractor shall, within 24-hours after receiving notification from the Engineer, apply erosion control seed/mulch mixes in accordance with the Contract Documents.

1.05 ACQUISITION OF PLANT MATERIALS

A. The Contractor shall obtain all live plant materials (cuttings and whole plants) from local plant suppliers (nurseries, landscaping companies, plant collectors, etc.). Locally grown or harvested plant materials are generally better adapted to local growing conditions and tend to be more resistant to plant diseases and climatic variations than plants grown or plant materials harvested form outside the local area of the project.

1. If the Contractor is unable to obtain the specified plant materials from the local area the Contractor shall notify the Engineer in writing regarding the inability to obtain specified plant material. The Engineer shall notify the Contractor in writing regarding authorized plant material substitutions or alternative sources.

B. The Contractor shall abide by all Federal, state, and local regulations regarding the collection of plant materials. The Contractor shall be responsible for obtaining all required collection permits (or shall insure that the Contractor's plant material supplier has obtained all required collection permits) from any and all Federal, state, or local jurisdictions with permitting or regulatory authority regarding plant material collection.

1. In addition to any and all Federal, state, and local permits or authorizations the Contractor shall insure that any plant materials collected on private property were obtained with written permission or authorization from the property owner.

C. All plant materials (cuttings or whole plants) collected from natural (non-nursery) locations shall be collected during the time period when those plants are dormant. All whole plants collected from natural (non-nursery) setting shall be collected in such a manner as to protect the plant's root system from a distance 3 inches to 6 inches outside the drip line of the plant to the stem and to a depth equal to or slightly greater than the radius of the drip line. All whole plants collected form natural (non-nursery) settings shall have the excavated root ball wrapped in burlap (tied with twine) to protect the root system.

PART 2 – PRODUCTS

2.01 FERTILIZER

A. The Contractor shall have the native soil, within the project site and in those areas where plant materials (cuttings or whole plants) will be installed, tested to determine if fertilizers need to be added to the soil to assure viable plant growth and survival. The addition of fertilizer to the soil will not be required except in those soils with test results indicating low soil fertility or low organic content.

B. Fertilizer shall be applied at the rate specified in the "Manual For Erosion and Sediment Control in GA" for the specified grass type. The Contractor shall supply the fertilizer in one of the following forms:

1. A dry free-flowing granular fertilizer, suitable for application by an agricultural or commercial grade fertilizer spreader.

2. A soluble form that will permit complete suspension of insoluble particles in water, suitable for application by a power sprayer (or commercial hydro-seeder).

3. A homogenous pellet, suitable for application through a "Ferti-Blast™" gun or other similar device.

4. A tablet or other form of controlled release with a minimum one-year release period.

C. The Contractor shall be responsible for assuring the application of fertilizers is consistent with Federal, state, and local laws and regulations particularly in those areas within 25 feet of open water or wetland ecosystems.

2.02 LIME

A. The Contractor shall apply agricultural lime to the native soils unless soil test results indicate that the addition of agricultural lime is unnecessary. The Contractor shall provide the Engineer with test results indicating the application of agricultural lime is unnecessary. Agricultural lime shall be of a standard manufacture, flour grade, meeting the requirements of ASTM C-602.

2.03 WHOLE LIVE PLANTS

A. The following describes the types of whole live plants that may be required as a part of this contract.

1. Seedlings: Plants grown from cuttings, seeds, or other approved propagation methods (i.e., air rooting). These plants do not normally show form characteristics of the species and are generally less than three years of age and less than 24 inches in height. Measurement for purposes of payment or design is in 3-inch height increments.

2. Whips: Bareroot, broadleaf trees, generally unbranched and between 2 feet and 6 feet in height. Measurement for purposes of payment or design is in 1-foot height increments.

3. Broadleaf Trees: Branched deciduous trees over 6-feet in height. Measurement for purposes of payment or design is by mainstem diameter or in 1-foot height increments.

4. Coniferous Trees: Coniferous trees over 2 feet in height. Measurement for purposes of payment or design is in 1-foot height increments.

5. Shrubs: Typically multi-stem or single-stemmed plants species that are less than 30 feet in height at maturity. Shrubs used in restoration projects are typically between 2-foot and 4-foot in height when delivered to a project site. Shrubs can be either delivered with a burlap wrapped root ball or in containers ranging from a 1-gallon to 5-gallon size. Measurement for purposes of payment or design is typically by container size or in 1-foot height increments.

6. Groundcover Species: Typically low growing or prostrate plants delivered to a project site in 4-inch, 6-inch, 10-inch, or 1-gallon size nursery pots. The species can vary form woody to herbaceous plants. Measurement for purposes of payment or design is typically based on container size.

2.04 MULCH AND OTHER AMENDMENTS

A. Bark or Wood Chip Mulch: Bark or Wood Chip Mulch shall be derived from pine or hemlock species. Local hardwood species can be used with authorization from the Engineer. The mulch shall be ground so that a minimum of 95 percent of the material by loose volume will pass through a 1.5-inch mesh screen (sieve) and no more than 55 percent of the material by loose volume will pass through a ¼-inch mesh screen (sieve). The mulch shall not contain any resin, tannin, or other compounds in quantities that would be detrimental to plant life, water quality or aquatic organisms. The installation requirements for best management practices include anchoring the mulch by pressing into the soil or via the use of netting.

B. Wood Cellulose Fiber Mulch: Wood Cellulose Fiber Mulch shall be used, as part of the hydro-seeding application shall be a fibrous wood cellulose product produced and marketed specifically for use in hydro-seeding applications. Mulch shall be produced from natural or recycled wood fiber such as woodchips, mill wastes, logging slash, or recycled construction wastes.

1. Mulch shall be free of any rock, plastic, metal, or other non-woody material.

2. Mulch shall be treated with a non-toxic green dye that facilitates inspection and application. The dye must be certified to contain less than 250 ppm of boron and certified as non-toxic to both plants and animals.

3. Mulch shall be manufactured in such a manner that after addition to water and agitation in slurry tanks the fibers stay uniformly suspended to form homogenous slurry.

4. When hydraulically applied to the ground the mulch shall allow the absorption and percolation of water.

5. Each package of mulch shall be tagged or marked to show dry weight and a certification of at least 93 percent organic content on an oven-dry basis as determined by ASTM 586.

6. The moisture content of the mulch shall be no greater than 15 percent as determined by oven-dried weight.

2.05 SEED (Ds2, Ds3)

A. The Contractor shall supply specified seed mixes, which are certified a minimum of 95% pure with a germination rate of 80% or greater, to the project site in the supplier's original, unopened bags. The Contractor shall insure that a certification tag is attached to each bag that displays or clearly identifies:

1. the scientific and common names of the seed,

2. the species names of all grass, legume, or cover crop seed included in the mix,

3. the lot number of the mix,

4. the percentage of weed seed and inert material,

5. the germination rate, and

6. the purity percentage.

2.06 SOD (Ds4)

A. Sod shall contain a minimum of 85% perennial grass species adapted to average climatic conditions at the project site. Any proposed substitute grass seed mixes, available in the local market at the time sod is to be installed at the site, shall be submitted to the Engineer for review and approval.

1. Sod shall be field grown for one calendar year or longer and have a well-developed root structure.

2. Sod shall be free of thatch, weeds, undesirable plant species, nematodes, diseases, and insect damage.

3. Sod shall be free of stones larger than 1-inch diameter, large chunks (>1 cubic inch in size) of woody material, and all human-made products such as plastic, glass, metal objects, and concrete.

4. Prior to harvest the sod shall be green, in an active and vigorous state of growth, and mowed to a height not less than ¼-inch and no greater than 1-inch.

5. Sod shall be cut in rectangular pieces with straight edges. Any sod with torn ends or irregular edges shall be rejected by the Engineer.

2.07 TALL WOODEN STAKES

A. These shall be untreated wooded stake or poles, preferably cedar, 5 feet to 8 feet in length, and either nominally 2-inch by 4-inch dimension lumber or 3-inch diameter poles.

2.08 TACKIFIER

A. Tackifier used in hydro-seeding or mulching applications to hold the seed or mulch product to the soil or slope shall conform the following:

1. Tackifier shall be derived from organic plant sources containing no growth or germination inhibiting materials.

2. When combined with water the tackifier shall have the property of even dispersion and suspension and shall blend evenly in slurry (i.e. a water and wood cellulose fiber mix).

3. Tackifier shall be mixed with a dyed wood cellulose fiber at a rate of 150 pounds of fiber per acre to monitor application rates and coverage.

2.09 EROSION CONTROL FABRICS/GEOSYNTHETICS (Mb)

A. Acceptable erosion control products include:

1. Jute Matting Or Coconut Fiber (Coir) Matting - Natural fiber products that are woven into a fabric that is typically produced in widths ranging from 4 feet to 16 feet (or more) and delivered to the end user in rolls. These materials are generally rolled out over an area of disturbed soil to stabilize the soil, reduce splash erosion, and provide a seedbed for the erosion control seed mix. This product shall be anchored using nine-inch 2-legged wooden or metal staples or as otherwise specified by the product manufacturer.

   a. Jute matting or coconut fiber matting shall be provided in rolls that are 4 feet (48 inches) wide and 50 yards (150 feet) with finished edges on the long sides.

   b. The matting shall be a woven material made of twisted, unbleached “yarn” with a weave opening of ¼-inch to ¾-inch square.

   c. Selected materials used shall be consistent with the site conditions, anticipated runoff velocities, soil characteristics, and rainfall intensities. The Engineer prior to procurement and delivery to the site shall approve selected materials.

   d. All manufacturers’ specifications shall be provided to the Engineer for approval.

2. Erosion Control Blanket
   Manufactured product combining two layers of woven synthetic material with a layer of straw, coconut fiber, shredded bark, or wood fiber (excelsior) sandwiched between the synthetic fabric layers. This product is manufactured in rolls of varying widths and lengths and is available from a variety of manufacturers and suppliers. Acceptable manufacturers include Belton Industries, North American Green, and CSI Geosynthetics. Products vary in specification and shall be selected based on their applicability to the project site conditions. Product is anchored using nine-inch, 2-legged wooden or metal staples or as specified by the product manufacturer.

a. Selected material used shall be consistent with the site conditions, anticipated runoff velocities, soil characteristics, and rainfall intensities.

b. All manufacturers' product specifications shall be provided to the Engineer for approval.

3. Plastic (Polyethylene) Sheeting

This product is used to temporarily cover exposed soils to prevent erosion or to cover areas where seed has been applied but temperatures are below germination levels and surface erosion risk is moderate to high. This product is generally anchored with sandbags.

a. Plastic sheeting shall be clear and a minimum thickness of 6 mils.

b. Refer to Specification Section 02125 for additional specifications.

4. Cellular Confinement System

The cellular confinement system shall meet or exceed the following specifications:

a. Expanded Dimension 8 feet x 20 feet

b. Collapsed Dimension 11 feet 5 inches by 5 inches

c. Panel Thickness (Nominal) 0.047 inches

d. Panel Weight 57 pounds (deeper cells weigh more)

e. Individual Cell Depth 4 inches (other depths available)

f. Cell Area 38 square inches

g. Cell Seam Node Pitch 13 inches

h. Welds per Seam 3

i. Seam Tensile Peel Strength 225 PSI

j. Installation Temp. Range -16 degrees to 110 degrees F.

k. Polymer Material HDPE (High Density Polyethylene)

l. Color Black

m. Carbon Black Content 2%

n. Chemical Resistance Superior

2.10 WARRANTY

A. The manufacturer shall warranty that the products under this specification are free from defects in materials and workmanship. The manufacturer and/or supplier shall agree to replace all defective materials without charge. The manufacturer shall have the right to inspect all materials identified by the purchaser as defective to determine probable cause or defect prior to replacement. The supplier shall provide the Engineer with specification tags for a cellular confinement system products delivered to the project site.

PART 3 – EXECUTION

3.01 GENERAL

As a minimum, the Contractor will perform all work in accordance with best management practices as defined in the “Manual for Erosion and Sediment Control in GA”.

A. Weather Conditions:

1. The Contractor is responsible to monitor weather conditions and weather forecasts to ensure that no areas of exposed soil shall be developed unless the appropriate erosion control measures can be implemented within 12 hours prior to a predicted rain event.

2. No seeding, fertilizing, or mulching shall be done:

a. when wind velocity exceeds 4 mph

b. within 12 hours after rain

c. when ground is frozen

d. if compacted soils have not been scarified prior to application

B. Soil Preparation:

1. The ground to be seeded or planted shall be graded in conformance with the Contract Drawings unless otherwise directed by the Engineer.

2. The ground shall be scarified (loosened) to alleviate compaction and manipulated to remove large rocks (>3-inch diameter), roots or pieces of wood (>24 cubic inches) and all human-made materials exposed within the seeding, planting, sod installation, and/or erosion control fabric or cellular confinement system placement areas.

3. The Contractor may leave larger rocks and roots or pieces of woody debris if authorized by the Engineer or as shown on the Contract Drawings.

C. Grading and Shaping:

1. All slopes steeper than 4:1 shall be graded and shaped to promote plant establishment. In areas of concentrated flow where slopes exceed 2.5:1 with lengths greater than 10' in height, the contractor shall install erosion control matting and blankets (Mb) in accordance with the "Manual For Erosion and Sediment Control in GA".
2. All areas where over-excavation is specified to allow incorporation of soil amendments, the Contractor shall notify the Engineer within 24 hours prior to final over-excavation grading and prior to the incorporation of any soil amendment products.

3. No soil amendment products shall be added to the native soil material until the Engineer approves the amendment.

4. Final grades shall be the elevation of the ground as shown on the Contract Documents after all soil amendments have been added.

5. The Contractor shall notify the Engineer within 48 hours prior to completion of final grading.

6. Final grading shall be inspected and approved by the Engineer. Unless otherwise authorized the Contractor shall not commence seeding, sod installation, erosion control fabric placement, installation of cellular confinement systems, or construction of bank stabilization measures until the final grading has been approved.

D. Soil Amendments:

1. Prior to seeding any areas the soil will be tested to determine the need for the addition of agricultural lime, organic compost, and/or fertilizers. The Engineer will collect the appropriate samples and submit those samples for testing. Results of the testing will be transmitted to the Contractor to allow determination of soil amendment needs.

2. Soil amendments such as fertilizer, lime, and mulch may be added separately as in the Dry Method described below (see Section 3.02) or incorporated into a water-based homogenous slurry that is applied by hydroseeding methods (see Section 3.03).

3. Soil amendments shall not be applied by water-based slurry on slopes steeper than 3:1.

3.02 DRY METHOD SEEDING

A. Seeding: The Contractor shall notify the Engineer not less than 24 hours in advance of any seeding operation and shall not begin work until area prepared or designated for seeding have been approved. Following approval by the Engineer, seeding shall commence immediately. Seed shall be applied at the specified rate and with the seed mix specified in the Contract Documents. Dry seeding shall be conducted with one of the following procedures:

1. Use an approved blower system with an adjustable disseminating device capable of maintaining a constant measured rate of material discharge that will provide an even distribution of seed at the rate specified and in the area specified;

2. An approved power-drawn drill or seeder capable of maintaining a constant measured rate of material discharge that will apply an even distribution of seed at the rate specified and in the area specified;

3. A hand-operated seeder capable of maintaining a constant measured rate of material discharge that will an even distribution of seed at the rate specified and in the area specified; or

4. By hand broadcasting with frequent assessment of application rates. If hand applications are used the seed shall be incorporated into the upper ¼-inch of topsoil using rake or other method approved by the Engineer.

Any reseeding ordered by the Engineer and not considered to be the Contractor's responsibility shall be performed by the Contractor and Payment made at unit contract prices for the areas reseeded.

B. Fertilizer: Fertilizer shall be applied in accordance with the procedures and requirements specified for seeding in Section 3.02.A. Fertilizer shall be placed at the rate and composition specified.

1. If specifications are not provided on the Contract Documents, fertilizer application rates and composition shall be determined by the results of a certified soil nutrient analysis**.**

   a. The Contractor shall collect soil samples from within the project area and from stockpiles of soils imported to the site prior to initiating construction.

   b. The Contractor shall submit the samples to a certified testing facility for soil nutrient analysis.

   c. The Contractor shall forward the results of the soil nutrient tests along with recommended fertilization rates to the Engineer for review and approval.

2. Aerial or broadcast application of fertilizer application within 25 feet of the edge of an open, flowing or still, body of water or wetlands shall be prohibited.

3. Spot applications of fertilizer may be made, as necessary, within 25 feet of open water or using equipment other than aerial application equipment or blowers. Caution shall be exercised when applying fertilizer adjacent to a water body or wetland because of the risks of adversely impacting water quality (and aquatic organisms).

C. Mulch Application: Specified mulch shall be spread evenly at the specified rates or 1,500 pounds over seeded areas within 24 hours after seeding unless otherwise directed by the Engineer.

1. Distribution of straw mulch shall be by means of an approved type mulch spreader, which utilizes forced air to blow mulch on seeded areas. In spreading straw mulch, the Contractor shall not use equipment that chops the straw into short (less than 6 inch) stalks.

2. In areas that are not accessible by mechanized mulching equipment, the Contractor shall mulch the area using hand methods approved by the Engineer.

3.03 HYDROSEEDING

A. Equipment: Hydroseeding is a method of applying a slurry-mixture that may contain grass seed (and/or the seeds of other native plants), fertilizer, wood cellulose fiber (dyed), tackifier, and water. The components of a hydroseed mix shall be mixed in tank (part of an approved hydroseeder) that uses water as a carrying agent and maintains continuous agitation and circulation through the use of internal mixing paddles (inside the

mixing tank). The mixture shall be homogenous and dischargeable through a nozzle.

1. The approved hydroseeder shall have sufficient tank capacity to be able to cover ½-acre of seeding area per tank load.

2. The tank shall have a discharge system capable of discharging slurry at a continuous, uniform, specified application rate at a distance of 500 feet horizontally from and at an elevation difference of 150 feet vertically above the hydroseeder.

3. Discharge lines shall be large enough to prevent blockage as slurry passes through the lines.

4. The hydroseeder shall be equipped with discharge spray nozzles that will provide a uniform distribution of the specified slurry.

5. The Engineer shall inspect and authorize use of any hydroseeder delivered to the project site prior to the Contractor initiating any hydroseeding activity.

B. Mixture: The following mixture shall be used unless an alternate is approved by the Engineer:

1. Proportions per acre are:

   a. 2,500 pound of wood cellulose fiber mulch,

   b. 120 pounds of tackifier or soil stabilizer,

   c. 60 pounds of fertilizer (or more if soil nutrient tests indicate a high nutrient need),

   d. 3,000 gallons of water, and

   e. Grass seed, using the specified seed mix and application rates.

2. Preparation: As the mixture components are being placed in the tank the agitator should be running at a slow to medium speed to assure good blending of the materials and a complete homogenous mixture of the ingredients.

   a. fill the tank 1/3 full of water,

   b. add ½ of the total amount of tackifier or stabilizer needed,

   c. add three 50 pound bales of wood cellulose fiber,

d. add ½ the total fertilizer required.

e. add enough water to bring the tank to half and increase the speed of the agitator to a fast speed.

f. add remaining 200 pounds of wood cellulose fiber when the tank is ¾-full.

g. add remaining tackifier and fertilizer.

h. add remaining water and begin immediately to apply slurry to areas designated for seeding.

C. The grass seed to be used for this project shall be specified Contract Documents, in pertinent Special Provisions, or by the Engineer following consultation with a local agronomist or landscape architect.

1. Application:

a. All of the slurry prepared must be applied within two hours following the start of mixture preparation.

b. Slurry shall not be applied if there is a forecast for rain within 3 days following application.

3.04 SOD PLACEMENT

A. Sod Placement Period: Sod placement will be authorized by the Engineer after consultation with a local landscape architect or landscaping company to determine the earliest and latest start dates that will allow for a reasonable chance of success when sod is installed. The installation may start as early as May 15th and should be completed prior to November 1st each year.

B. Designated Sod Placement Areas: Sod shall be placed in areas as designated on the Contract Drawings or as directed by the Engineer.

C. Sod Placement (Ds4) Procedures: The Contractor shall notify the Engineer a minimum of 48 hours prior to sod installation to allow an inspection of the prepared areas. The Contractor is responsible for insuring the sod placement area has smooth scarified soils, is properly graded, has an appropriate soil moisture prior to sod placement, and is free of larger rock (>2-inches diameter), woody debris, and human-made products.

1. On long steep slopes sod shall be laid perpendicular to the fall line of the slope. For slopes greater than 3:1, sod shall be anchored with wooden or biodegradable pins or other approved method.

2. In ditches sod shall be laid at right angles to the flow line.

3. When required, or as directed by the Engineer, sod sections placed on steep slopes shall be pinned using 2 anchoring pins on each side of the sod section.

4. All air pockets shall be removed from under the sod by trampling or rolling with a compacting roller.

5. Frayed ends of sod sections will be removed. Holes in sod area shall be patched with new, undamaged sod.

D. Finishing: The Contractor shall insure the sod installation results in smooth parallel rows tightly packed together and in a relatively straight line. Sod sections shall be placed immediately adjacent to one another, as tightly packed together as possible. All joints shall be butted tightly together and staggered laterally. Sod sections shall not be stretched or reduced in size so they will fit.

E. Watering: Irrigation may be required in sodded areas installed during the warmer, drier periods of the year. The Contractor shall have appropriate temporary irrigation equipment on site prior to starting the installation of sod. Irrigation of the sod shall commence at the end of the first day sod placement in initiated. Watering shall be provided at a rate of 1.5-inches per week (7 days). Watering shall, be the responsibility of the Contractor.

3.05 EROSION CONTROL PLAN IMPLEMENTATION

A. Silt Fence Installation (Sd1): Silt fence shall be installed as directed by the "Manual For Erosion and Sediment Control in GA" or as directed by the Engineer. Silt fence shall be installed a minimum of 48 hours prior to the time the Contractor initiates any construction activities (i.e. clearing, grubbing, and grading).

B. Erosion Proofing Ingress/Egress Points (Co): The Contractor shall place quarry spalls at all ingress/egress points on the site that are transitions for pavement to grassed or bare native soil. These transition areas will be a minimum of 50 feet long and 20 feet wide. The Contractor shall place a geo-textile on the native soil prior to placing quarry spalls to prevent spalls from being pushed into the ground during wet site conditions.

C. Application of Straw Mulch: See Section 3.02.C.

D. Erosion Control Blankets:

1. Placement:

a. Biodegradable erosion control blanket shall be used on all slopes 4H:1V and steeper.

b. The erosion control blanket shall be spread only on prepared, fertilized and seeded surfaces.

c. On all slopes, the erosion control blanket shall be laid up-and-down the slope in the direction of water flow.

d. Waste of erosion control material shall be minimized by limiting overlaps as specified and by utilizing the full length of the netting at roll ends.

e. The erosion control blanket shall also be used on flatter areas where surface soil protection is considered critical to the establishment of vegetation and stabilization of erosive forces (i.e. water, wind, raveling, drying, etc.).

f. Proper selection of materials is critical for specific slopes and slope distances. No one product is applicable for all situations. The erosion control products should be selected on a case-by-case basis in consultation with the manufacturer.

2. Anchoring Process:

a. Ends and sides of adjoining pieces of material shall be overlapped 6-inches and 4-inches respectively and stapled. Six anchors shall be installed across ends. A common row of staples shall be used at side joints. Staple through both blankets, placing staples approximately 6-inches apart.

b. The top edge of the erosion control blanket shall be anchored in a 6-inch deep by 6-inch wide trench. Backfill and compact trench after stapling.

c. Anchorage shall be by means of 9-inch long, two-legged staples driven vertically and full-length into the ground. The legs shall be spread 3 inches to 4 inches apart at the ground to improve resistance to pullout. In loose soils the use of 18-inch metal/washer pins may be required to properly anchor the blankets.

d. All 3:1 or greater slopes shall be stapled with 2 staples per square yard in a triangular pattern. Staples shall be installed per the manufacturer's recommended staple pattern guide.

e. The erosion control blanket shall not be stretched, but should be laid loosely over the ground to avoid the blanket being pulled downslope.

f. The erosion control blanket shall not be rolled out onto ground containing frost within the 9-inch penetration zone of the anchorage staples. Further, no stapling shall be undertaken while any frost exists within the staple penetration zone.

g. Refer to Specification Section 02125 – Erosion and Sedimentation Control for additional product requirements.

3.06 BANK STABILIZATION (Sb)

The Contractor will perform Bank Stabilization (Sb) in accordance with the "Manual For Erosion and Sediment Control in GA", which may include:

A. Brush Mattress:

1. General Description: Brush mattress stabilization system is a combination of living material that forms a protective cover of vegetation over a relatively shallow slope (flatter than 2H to 1V gradient). The eroding surface shall be protected by placing layers of live branch cuttings directly on the slope with the basal ends of the cuttings located at or very near the toe of the slope and the growing tip oriented up the slope parallel to the fall line. Live stakes interspersed in the brush mattress shall be used as anchor points for tying a network of heavy duty landscaping twine to bind the brush mattress to the slope. In addition the toe of the treated slope shall be protected with either live or dead fascines anchored into the slope using stout stakes.

2. Construction Requirements:

a. Preparation Time: Live branch cuttings shall be collected locally and within 5 days prior to planned installation. Live cuttings shall be stored in a cool, shaded area to avoid desiccation. Live stakes and live fascines (bundles of live branch cuttings) shall be prepared immediately (within 1 day – 24 hours) prior to installation.

b. Planting Period: Plants shall be planted when willows or other suitable species used are dormant. This period extends from the time the leaves start to turn yellow in the autumn to the time new growth starts in the spring.

c. Construction Sequence:

1) Anchor the lower edge of the brush mattress in a trench, using a fascine to anchor and protect the lower bank edge from undermining.

2) Place live branches on slope with butt ends pushed into soil below the mean high water level with growing tips placed at a slight angle in the direction of stream flow.

3) Branches shall be placed to give coverage of approximately 4 branches every 6 linear inches.

4) Pound wooden stakes to ½ their length into soil between branches 3-feet on center.

5) Wrap wire or jute (heavy duty landscaping twine) around stakes and over branches as tightly as possible.

6) Once the twine or wire has been placed and made as tight as possible by hand, pound wooden stakes further into the ground to tighten the wire or jute and compress branches to slope.

7) Tamp live stakes between wooden stakes.

8) After fascines and branches are installed, place soil on top slightly exposed material. Fill voids between the branches of the brush mattress with loose soil to promote rooting.]

B. Branch Packing:

1. General Description: Branch packing is a process of placing alternating layers of live cuttings and soil in a hole, gully, or slump area in a slope or streambank. Live cuttings shall be oriented so the growth end points out of the hole, gully, or slump area and the basal end is embedded into the native soil. The layers of live cuttings shall be placed at approximately a 20-degree to 30-degree angle above horizontal with the growth end higher in elevation than

the basal end. In large hole, gully, or slump areas dormant posts or tall wooden stakes shall be installed vertically, within the area being stabilized, in a pattern designed to allow a network of heavy landscaping twine to be tied to the vertical posts and over the top of the last live branch layer to hold that layer in place. The last layer of live branch cuttings shall be covered with soil. In addition, the vertical posts or stakes add horizontal stability to the layers of live cuttings.

2. Construction Sequence:

a. Begin at the lowest point, drive stakes 3 to 4 feet vertically into the ground. Set the stakes 1 to 1.5 feet apart.

b. Place an initial layer of branches 4 to 6 inches thick at the bottom between the vertical stakes. Place additional branches in a crisscross pattern covering the entire surface of the layer. Add a layer of soil no thicker than 120 inches and compact it.

c. The thickness of the layer shall be determined by the steepness of the slope (thinner when steeper) and/or problems with bank seepage.

d. Growing tips of branches shall protrude slightly from the filled surface to retard velocity and filter sediment.

e. Growing tips of branches shall protrude slightly from the filled surface to retard flow velocity and filter sediment.

f. Install a relief drain at the rear of the trench and above the base flow level. Place outlet at or above flow level to protect against further slumping.

g. The final installation shall conform to the existing slope.

C. Brush Layering:

1. General Description:

a. A layer of soil shall be wrapped in a coir fabric to form an approximately 12-inch thick “soft gabion” which shall be placed over the layer of live cuttings. More live cuttings shall be placed on top of the soft gabion and another soft gabion shall be placed on top of those cuttings and so on.

b. Alternating layers of live cuttings and soft gabions shall be installed so the face of the gabions forms a slope ranging from 1H:1V to 3H:1V. The live cuttings shall protrude out of the soft gabion reinforced slope face approximately 2 to 3 feet.

c. Brush layering/soft gabion systems over 7 feet in height and 20 feet in length shall have an Engineering analysis for completed determine slope stability prior to construction. The Contractor shall be consult with the Engineer prior to initiating construction of a vegetated soft gabion wall. The Contractor shall be responsible for collecting slope and soil stability information at slope or bank restoration sites where brush layering/soft gabion systems are proposed for installation.

2. Construction Sequence:

a. The slope shall be prepared by excavating a native soil bench at the lowest elevation of the affected area. In the case of a streambank that is typically at the ordinary high water mark.

b. The bench shall be constructed the full length of the effected area and shall be reinforced at the toe of the effected area using rock or dead plant cutting fascines to protect the toe from additional erosive forces. The bench shall be cut into the slope approximately 4 to 6 feet at a downward angle of approximately 5-degrees. The back slope of the treatment area is shall be cut at 0.5 to 1 or steeper.

c. Soil excavated from the treatment area during the construction of the bench shall be stockpiled in an area designated by the Engineer. This soil shall be mixed with fertilizer and mulch.

d. Live branch cuttings; shall be collected locally, brought to the project site, inspected and approved by the Engineer. Following acceptance by the Engineer, the Contractor shall place the bundles of live cuttings in close proximity to the work area. The Contractor shall protect the cuttings from animal damage and desiccation.

e. After excavation has been completed, the soil has been removed and the treatment area has been prepared and a layer of live cuttings shall be placed in the bottom of the cut bench and covered with native soil. The basal end of the cuttings shall be pushed into the soil at the vertical slope to

provide contact with groundwater. The basal end of the cuttings shall be placed into the treatment area so they are oriented perpendicular to the slope face. The growth end of the cuttings shall protrude from the bank approximately 2 to 3 feet. There shall be 8 to 12 live cuttings per linear foot of bench in each brush layer.

f. After the brush layer has been placed, roll out the coir fabric over the top of the live cuttings, insuring the selvage edge on one side of the roll is against the back slope of the cut-bench. Lay the remaining width of the material out so ½ the fabric width is laying flat and the other ½ is bunched up and laying on the live cuttings outside of the area where soil is to be placed.

g. With the soft gabion fabric in place, add a layer of soil 14 inches to 16 inches thick (loose) and compact to a layer 10 inches to 12 inches thick. Containment boards shall be used to contain the outer edge or nose of the soft gabion and prevent soil from being cast down the slope or into the water.

h. After the soil has been compacted roll the ½ of the fabric that was not covered by the soil over the top of the soil to form a coir pillow or soft gabion filled with soil.

i. Using dead stout stakes anchor the selvage edges of the fabric into the back wall of the cut-bench area. The Contractor shall exercise care when anchoring the ends of the soft gabion to avoid having soil emigrate out of the soft gabions and to reduce the risk of failure at the ends of the gabions.

j. During dry weather conditions the Contractor shall irrigate each brush layer/soft gabion combination.

k. The Contractor shall continue steps (e) through (i) until the desired elevation has been reached and the bank or slope stabilization area is fully treated.

D. Cellular Confinement Systems:

1. General Description: The cellular confinement system is a three dimensional system used for soil stabilization. It is defined as a series of symmetrical shaped cells joined together sharing common walls such that the final system confines infill material within the cells and reduces both vertical and lateral movement.

2. Construction Sequence:

a. The Contractor shall verify site conditions are as shown on the Contract Drawings. Notify the Engineer if site conditions are not acceptable. The Contractor shall not begin preparation or installation until unacceptable conditions have been corrected or the Engineer has authorized initiation of work.

b. The Contractor shall install the cellular containment system according to standard practices recommended by the manufacturer in accordance with the purpose of the application.

c. The Contractor shall prepare the subgrade in accordance with manufacturer's specifications. Excavate or fill foundation soils so the top of installed cellular confinement system is flush with or slightly lower than adjacent terrain or final grade.

d. Anchor cellular confinement sections at crest of slope. Use type of anchor and frequency of anchoring indicated on the Contract Drawings or as directed by the Engineer or per the Manufacturer's specifications.

e. Expand cellular confinement sections down slope. Ensure each Geoweb section is expanded uniformly to required dimensions and outer cells of each layer are correctly aligned. Interleaf or overlap edges of adjacent sections in each layer, according to which sidewall profiles abut. Ensure upper surfaces of adjoining Geoweb sections are flush at joint and adjoining cells are fully anchored. Anchor with specified anchors per manufacturer's recommendations.

f. Place infill in expanded cells with suitable material handling equipment, such as a backhoe, front-end loader, conveyor, or crane-mounted skip. Limit drop height to a maximum of 1 m (3 feet). Avoid displacement of cellular confinement sections by infilling from the crest to toe of slope. Overfill and compact infill in accordance with consistency of material and cell depth as follows: overfill screened topsoil between 25 50m (1 to 2-inches) and lightly tamp or roll to leave soil flush with top edge of cell walls. Apply specified surface treatment.

E. Live Staking:

1. Construction Sequence:

   a. Plants shall be planted when willow, or other species suitable for use in vegetated riprap projects, is dormant. This period extends from the time the leaves start to turn yellow in the autumn to the time new growth starts in the spring. The Contractor shall schedule plant material installation for early spring just before the plants come out of the dormancy period.

   b. Prior to installation the Contractor shall dip the butt end of all plant specimens (i.e. live stacks) into a liquid mycorrhizae root dip gel (rooting hormone with soil bacteria) to stimulate root growth.

   c. Live stakes shall be planted right side up with the butt ends planted into the ground. In order to identify the top of the stakes, the butt ends should be pointed or otherwise marked at the time of cutting. Alternatively the tops of the stakes may be painted with a water-soluble latex paint.

   d. The Contractor shall ensure that live stakes are to be planted as deep as possible. About 80 percent of the stake shall be inserted into the ground. The Contractor shall avoid stripping the bark or bruising the stake. The Contractor shall not pound the stakes with an ax or sledge. In hard ground the Contractor shall use an iron bar to prepare holes for the cuttings.

   e. The Contractor shall tamp soil around the live stakes after they have been placed into the ground. The live stakes shall be firm in the ground so that they cannot be easily moved or pulled out.]

3.07 IRRIGATION (WATERING)

A. Short-term Irrigation: Trees and shrubs shall be thoroughly soaked after planting and provided with additional water at intervals necessary to provide for good health and growth of the planting. The Contractor shall be responsible for ensuring that adequate short-term irrigation is provided for the project.

   1. The Contractor is responsible for providing water for irrigation and must adhere to all related legal and permit requirements.

   2. Upon completion of planting, all planted and seeded areas within the project site shall be soaked to saturation by a fine spray. The

new plantings and seedings shall be watered by an on-site sprinkling system during dry weather or whenever necessary for proper establishment of the planting and/or seeding until final project acceptance.

3. At no time shall the planting be allowed to dry out.

4. The Contractor shall implement appropriate measures to avoid excessive watering, soil washing (sheet erosion), excessive soil saturation, and/or areas of excess standing surface water.

5. Any damage to soils or plants that result from the Contractor's excessive or irregular irrigation (watering) practices shall be repaired within 24-hours by the Contractor at no additional cost to the OWNER.

6. The Contractor shall provide irrigation after the initial construction period and throughout the maintenance and guarantee period if required. This Contractor responsibility extends to any performance monitoring periods that may be associated with agency permits issued to authorize the project work.

7. The Contractor shall review all short-term and long-term irrigation system proposals with the Engineer to ensure that said systems are adequate. No irrigation systems shall be installed or implemented without review and approval by the Engineer. Approvals from the Engineer shall be obtained 2-weeks prior to the time to begin required irrigation.

3.08 MAINTENANCE PRIOR TO ACCEPTANCE

A. The Contractor shall maintain the planted areas in a satisfactory condition until final acceptance of the project. Such maintenance shall include the filling, leveling, and repairing of any washed or eroded areas, as may be necessary, and sufficient watering to maintain the plant materials in a healthy condition. The Engineer may require replanting of any areas in which the establishment of the vegetative ground cover does not appear to be developing satisfactorily.

1. Plants shall be maintained in a vigorous, thriving condition by watering, cultivating, weeding, pruning, spraying, and other operations necessary. No trees or shrubs will be accepted unless they are healthy and show satisfactory foliage conditions.

B. At time of acceptance of the completed project, all seeded areas shall be totally established with no bare spots. In addition, all seeded areas shall

have no more than 5 percent aerial coverage by non-native invasive plant species and 5 percent aerial coverage by noxious weeds.

C. At the time of acceptance of the complete project all planted areas shall have 100 percent survival of vegetative species (trees, shrubs, perennials).

D. Vegetation Management:

1. Maintenance of grass species within the erosion control areas outside a critical wildlife or fish habitat areas shall be undertaken using conventional mowing, trimming, weeding, and other vegetative management techniques.

2. The Contractor shall remove all noxious weeds and non-native, invasive plant species from within the project areas as regularly as necessary to prevent establishment of any noxious or non-native, invasive plant species.

3. Pesticide and herbicide use shall be implemented in accordance with all applicable Federal, state, and local regulations and policies.

a. The Contractor shall be responsible for acquisition of all permits and licenses require for use and application of pesticides and herbicides.

b. The Contractor shall be responsible for appropriate storage and disposal of all chemical agents used within the project site for the purposes of controlling or eradicating pests or undesirable vegetation.

c. The Contractor shall be responsible for all “chain of custody” requirements associated with all chemical constituents used for the control and/or eradication of pest and/or undesirable vegetation.

d. The Contractor shall not use pesticides and/or herbicides in critical wildlife and fish habitats (i.e. riparian zones, nesting cover, etc.)

e. The Contractor shall employ a licensed pesticide applicator as required by any Federal, State or local laws.

E. The Contractor shall provide adequate protection to all newly seeded areas including the installation of approved temporary fences to prevent trespassing and damage, as well as erosion control, until the end of the one-year correction period.

F. The Contractor shall replace any materials or equipment damaged by its employees or subcontractors.

G. The Contractor shall periodically inspect all erosion control blankets and matting following installation, particularly after rainstorms, to check for erosion and undermining. Any dislocation or failure shall be repaired within 24 hours. If washouts or breakage occurs, the Contractor shall reinstall the material after repairing the damage. The Contractor shall continue to monitor the project until it becomes permanently stabilized.

3.09 FINAL INSPECTION, ACCEPTANCE AND GUARANTEE

A. Inspection of seeding and planting work shall be completed at conclusion of the maintenance period.

B. Written notice requesting inspection shall be submitted to the Engineer and Owner at least 10 days prior to the anticipated inspection date.

C. The Contractor shall submit inspection reports and/or maintenance records to the permitting agencies that have the ultimate approval authority with regard to when an erosion control project is successful.

D. Final acceptance of the work prior to beginning the guarantee period of the contract will be accepted upon written approval by the Engineer and/or Owner, which is based on the satisfactory completion of all work, including maintenance, but exclusive of the replacement of plant material or any required seeding.

E. The Contractor shall replace, as soon as weather conditions permit, all dead plants and all plants not in a vigorous, thriving condition, which are observed at the end of the one-year correction period.

F. Plants used for replacement shall be of the same size and variety specified in the Contract Documents unless otherwise directed by the Engineer. Plants shall be furnished, planted, staked, and mulched as specified in the Contract Documents.

G. At time of final acceptance of the completed project, all seeded areas shall be totally established with no bare spots. In addition, all seeded areas shall have no more than 5 percent aerial coverage by non-native invasive plant species and 5 percent aerial coverage by noxious weeds.

H. At the time of acceptance of the completed project all areas where bank stabilization techniques were implemented shall have a minimum of 85 percent survival of vegetative species (trees, shrubs, perennials) installed. In addition, the vegetative species (trees, shrubs, perennials) shall provide 85 percent aerial cover.

I. Prior to final acceptance the Contractor shall provide the Engineer with a written report (with photographs) documenting the condition of onsite plants and seedings. This report shall be used as part of the final project inspection and acceptance.

3.10 MAINTENANCE/GUARANTEE AFTER ACCEPTANCE

A. The Contractor shall be responsible for a period of one year after date of acceptance of all work under the Contract, for all plant replacements including trees, shrub seedlings, perennials and any other portion of the bank stabilization treatment requiring maintenance or replacement.

B. The work covered by the maintenance and guarantee portions of these specifications consists of providing all replacements of plants, labor, materials, equipment, and supplies and performing all operations in connection with maintenance and guarantees.

C. The Contractor shall provide the Engineer and OWNER with a monthly record describing all maintenance activities performed including dates, materials, irrigation schedule and other pertinent activities. The person who actually supervised and/or performed the work shall sign the report.

D. The inspection of seeded areas is independent of the final inspection and maintenance period.

END OF SECTION

SECTION 02273

Riprap

PART 1 – GENERAL

1.01 SCOPE

A. The Contractor shall provide stone riprap, including associated earthwork and geotextile filter material, complete and in place, in accordance with the Contract Documents.

1.02 REFERENCED SPECIFICATIONS, CODES, AND STANDARDS

A. This Section references the following Commercial Standards:

Georgia Department of Transportation (GA DOT), Standard Specifications Construction of Roads and Bridges, 1993 Edition

ASTM C 88	Standard Test Method for Soundness of Aggregates by Use of Sodium Sulfate or Magnesium Sulfate
ASTM C 535	Standard Test Method for Resistance to Degradation of Large Size Coarse Aggregate by Abrasion and Impact in the Los Angeles Machine.
AASHTO T 85	Standard Method of Test for Specific Gravity and Absorption of Coarse Aggregate
AASHTO T 210	Method of Test for Aggregate Durability Index.
AASHTO T 134	Optimum Moisture Content

1.03 CONTRACTOR SUBMITTALS

A. The Contractor shall submit samples of all materials proposed to be used in the work in accordance with the requirements in Section GC-28 – Working Drawings, Shop Drawings, Data on Material and Equipment, Samples and Licenses. Sample size shall be as determined by the testing laboratory.

B. Testing certificates from a qualified testing agency shall be submitted prior to acceptance of the rock source to verify the conformity to the requirements of the Contract Documents. Contractor shall, if requested, coordinate inspection of the rock source by the Engineer.

PART 2 – PRODUCT

2.01 STONES FOR RIPRAP

A. All Stone for riprap shall be sound, durable pieces of quarried stone weighing 156-pounds per cubic foot or more. The stone shall be angular and random in shape; rounded boulders or cobbles shall not be used. Flat, slabby, or shaley pieces will not be acceptable. Stones shall be resistant to weathering and to water action and free from overburden, spoil, and organic material and shall meet the gradation requirements below.

A. Riprap shall be of the type indicated on the Drawings and shall conform to the size types as follows:

Type 2 – equivalent to GA DOT specification for "Plain Riprap":

Percent by Weight	Volume (cu.ft.)	Weight (lb.)	Diameter (in.)
65 – 100 %	0.75 – 2.0	125 - 320	15 – 24
10 – 65 %	0.04 – 0.75	7 - 125	5 – 15
0 – 10 %	0.0 – 0.04	0 - 7	0 – 15

Type 3 – equivalent to GA DOT specification for "Dumped Riprap – Type 3":

Percent by Weight	Volume (cu.ft.)	Weight (lb.)	Diameter (in.)
65 – 100 %	0.10 – 1.0	17 – 65	6 – 18
10 – 65 %	0.01 – 0.1	2 – 17	2 – 6
0 – 10 %	0.0 – 0.01	0 - 2	0 – 2

C. Stones shall consist of durable, sound, hard, angular rock meeting the following requirements for durability absorption ratio, soundness test, and abrasion test:

Durability Absorption Ratio	Acceptability
Greater than 23	Passes
10 to 23	Passes only if Durability Index is 52 or greater
Less than 10	Fails

$$\text{Durability Absorption Ratio} = \frac{\text{Durability Index (Coarse)}}{\text{\% absorption} + 1}$$

D. The durability index and percent absorption shall be determined by AASHTO T 210 and AASHTO T 85, respectively. The minimum apparent specific gravity of the stones shall be 2.5 as determined by AASHTO T 85.

E. Stones shall have less than 10 percent loss of weight after five cycles, when tested per ASTM C 88.

F. Stones shall have a wear not greater than 40 percent, when tested per ASTM C 535.

G. Control of gradation shall be by visual inspection. The Contractor shall furnish a sample of the proposed gradation of at least 5 tons or 10 percent of the total riprap weight, whichever is less. If approved, the sample may be incorporated into the finished riprap at a location where it can be used as a frequent reference for judging the gradation of the remainder of riprap. Any difference of opinion between the Engineer and the Contractor shall be resolved by checking the gradation of two random truckloads of stones. Arranging for and the costs of mechanical equipment, a sorting site, and labor needed in checking gradation shall be the Contractor's responsibility.

H. The acceptability of the stones will be determined by the Engineer prior to final placement.

2.02 GEOTEXTILE FABRIC FILTER

A. Geotextile fabric shall meet the requirements of GA DOT Section 881.06 for woven fabrics, having physical properties as follows:

Tensile Strength - any direction (ASTM D 4634)	200 lbs
Bursting Strength (ASTM D 3786)	500 psi
Elongation Before Breaking (ASTM D 4634)	10 – 35%
Percent Open Area (GDT: 88)	4.0 – 6.0%

B. Fabric shall be Mirafi Filterweave 403 or approved equal.

PART 3 – EXECUTION

3.01 SURFACE PREPARATION

A. Surfaces to receive filter materials and riprap, including the toe trench and slope, shall be brought to the line and grade indicated and shall be smooth and firm, free of brush, trees, stumps, and other objectionable material. Where filling of depressions is required or a filled bank is constructed, the new material shall be compacted with hand or mechanical tampers to a minimum of 85-percent of maximum density.

B. The Contractor shall remove and exclude all stormwater, groundwater and creek or stream water from the excavation. Sump pumps and sand bags or portable dams, diversions, or other approved means, shall be used to remove and exclude water and continuously maintain water level below

the bottom of the excavation. Water shall be removed and excluded until both geotextile filter material and riprap have been placed. Any water removed from the excavation shall not be discharged into any surface stream or other water body unless such discharge meets water quality standards. Removed water may be disposed on-site by land application using sprinklers in an area designated by the Engineer or by discharge into an approved treatment system.

B. Cleared and excavated materials shall be hauled off site to an appropriate disposal location arranged by the Contractor and at its sole expense unless otherwise indicated or specified.

C. Riprap installed at the toe of a stream bank below the elevation of the water in a stream to prevent scour from undermining the riprap shall be backfilled and covered with native soil to the original grade. The backfilled native soil shall be compacted with hand or mechanical tampers to a minimum of 80-percent of maximum density.

3.02 PLACEMENT OF GEOTEXTILE FABRIC

A. The fabric shall be placed with the long dimension running up the slope, with the upstream strip overlapping the downstream strip. Use a minimum of 2-foot overlap for each overlap. Use a wider overlap if recommended by the geotextile manufacturer.

B. The fabric shall be placed loosely with sufficient folded or gathered material to prevent stretching and tearing during riprap placement.

C. The fabric shall be anchored into place using securing pins with type and spacing as recommended by the manufacturer. In addition, the fabric shall be secured at the toe and crest of the slope using anchor trenches at least 2-feet deep. If a stream bank extends sufficiently above a stream such that riprap would not be installed to the top of the bank, then the fabric shall be anchored in a 2-foot deep trench up-slope from the top of the minimum free-board of 0.5 feet above the flow resulting from a 50-year, 24-hour storm runoff event.

3.03 STONE RIPRAP

A. Placement of riprap shall begin at the toe and proceed up the slope. The stones shall be placed, or dumped from a height of not more than three feet and placed with equipment or by hand. Sufficient hand work shall be performed to produce a neat and uniform surface, true to the lines and grades indicated on the Drawings.

B. Dumped riprap shall be used only where there is an existing road access to the top and/or bottom of the stream bank. Riprap shall be dumped into

place, beginning at the toe and proceeding up the slope, and may be spread using suitable equipment. Care must be taken to prevent damage to the underlying filter material. Sufficient hand work shall be performed to produce a neat and uniform surface, true to the lines and grades indicated on the Drawings.

END OF SECTION

(This page is intentionally blank)

SECTION 02302

GRANITE CURB

PART 1 GENERAL

1.01 SCOPE

A. Furnish and install new granite curb or remove and reinstall existing granite curb as required to complete the Work at locations as directed by the Engineer.

1.02 SUBMITTALS

A. Submittals shall be made in accordance with the requirements of the General Conditions of the Contract Documents. In addition, the following specific information shall be provided:

1. 2 samples of finished product granite curb.

PART 2 PRODUCTS

2.01 MATERIALS

A. The granite curbs shall be approved granite curbs and shall match exactly the existing curbs in color, texture and size.

B. Granite material must first be approved by the Engineer before any ordering or installation occurs.

C. Granite curb shall be tough, sound, durable, uniform in color and free from rifts, seams and laminations. Granite curb shall be not less than 3-feet or more than 8-feet in length, 18-inches to 24-inches in depth and matched width at the top to be 6-inches.

D. The front of all substone shall have a batter finished surface with a ¾-inch bullnote at the battered edge. The granite shall have no depressions greater than ¼-inch from a straight edge the same length as the stone. The remainder of the face shall be free from projections greater than 1/2-inch, and the back for 3-inches down from the top shall be satisfactorily dressed. The ends for the full width of the stone to a point 14-inches down from the top of the curb shall be close jointed, square to the top and face; the remainder of the end shall be cut so that there will be a close joint. The bottom of the stones shall be squared.

2.02 FINISH

A. Granite curb shall have a sawn finish on the top and a split finish on the face of the curb.

PART 3 EXECUTION

3.01 SETTING GRANITE CURB

A. Curb shall be set with close joints. The top front edge of the curb shall present an unbroken line and the face a plane surface with a batter of 1 to 12. The curb stone at the corners of intersecting joints shall be of the same quality as the curb hereinbefore specified and shall be set in the same manner. On curbs, where drainage basins are located, special shaped stones as may be required shall be furnished and set. At ramps and wherever required, special shaped stones shall be furnished and set.

B. Curb trenches shall be opened to their full width and depth well in advance of the setting of the curb. The foundation for curb shall be 3000 psi concrete. The bottom layer of concrete shall be 6-inches thick; the concrete in front and back of the curb shall be deposited simultaneously to the required height.

3.02 REMOVING AND REINSTALLING EXISTING CURB

A. In locations where existing granite curb conflicts with pipe installation and hydrant removal and replacement, the Contractor shall remove the existing curb.

B. The Engineer will determine whether any granite curb that removed is acceptable for reinstallation.

C. Removed curb approved for reinstallation shall be cleaned and stored by the Contractor until reinstallation.

D. Reinstallation of curb shall include saw cutting the existing pavement a minimum of 1-inch, removing pavement to subgrade, excavation of base and subgrade as necessary to install the curb, installing the curb and backfilling and compacting the completed installation.

E. Any curb that is damaged by the Contractor, which renders it unsuitable for reinstallation, as determined by the Engineer, shall be removed from the site and be replaced with new curb by the Contractor at no additional cost to the Owner.

+ + + END OF SECTION 02302 + + +

SECTION 02304

GRANITE BLOCK PAVEMENT

PART 1 GENERAL

1.01 SCOPE

A. Install granite block pavement on either a stone dust base or a concrete base in accordance with the Drawings and Specifications and directions of the Engineer. The joints shall be filled with either stone dust or mortar as shown on the Drawings.

1.02 SUBMITTALS

A. Submittals shall be made in accordance with the requirements of the General Conditions of the Contract Documents. In addition, the following specific information shall be provided:

1. Five (5) samples of blocks before starting work, for approval by the Engineer. Blocks used on the work shall conform to the approved samples in the opinion of the Engineer.

2. Sample of stone dust screenings to the Engineer for approval.

1.03 PREPARATION OF SUBGRADE

A. The Contractor shall trim and roll the subgrade to smooth, uniform lines, to the satisfaction of the Engineer, prior to placing the pavement.

PART 2 PRODUCTS

2.01 GENERAL

A. Blocks shall be cut from fine to medium grained sound and durable granite. The granite shall be reasonably uniform in quality and texture throughout and shall be free from an excess of mica and feldspar and from seams, scales or evidence of disintegration.

2.02 BLOCKS

A. Blocks shall be fairly rectangular in shape and shall be not less than 8-inches nor more than 12-inches in length; not less than 3-inches nor more than 5-inches in depth. The blocks shall be cut so that opposite faces will be approximately parallel and adjoining faces approximately at right angles to

each other. Blocks shall be dressed that they may be laid with ½-inch joints. All blocks shall have one smooth split head.

2.03 STONE DUST BASE (FOR FLEXIBLE BASE ONLY)

A. Water based stone dust screenings base: Stone dust screenings shall be either limestone or granite and shall consist of hard, durable, sharp-angled fragment free from dirt or other deleterious matter, graded within the following limits:

100% passing ½-inch square opening screen
20% to 40% passing 20 mesh sieve
5% to 15% passing 200 mesh sieve

B. Stones shall be 100% crushed with all fines remaining. Contractor shall provide a sample of stone dust screenings prior to construction to Engineer for approval.

2.04 MORTAR (FOR RIGID PAVING BASE ONLY)

A. Construction and Pointing Mortar:

1 part by volume portland cement.
1 part by volume hydrated lime.
6 parts, by volume sand.
Pigment shall amount to less than 10% by weight of sample.

2.05 CONCRETE SLAB (FOR RIGID PAVING BASE ONLY)

A. Concrete slab shall be as specified in Section 03300.

PART 3 EXECUTION

3.01 LAYING BLOCK PAVEMENT ON A FLEXIBLE BASE

A. The blocks shall be carefully laid on a stone dust cushion according to the patterns shown on the Drawings and as directed by the Engineer and shall be solidly rammed in position. Joints between blocks shall be a maximum of 1-inch and a minimum of 1/2-inch in width. All blocks shall be clean when placed in the pavement. Blocks which, in the opinion of the Engineer, are not satisfactorily clean shall be well washed before being placed. Cutting of blocks to meet pattern requirements will be permitted, subject the approval of the Engineer.

B. After a sufficient area of block pavement has been laid, the surface shall be tested with a 10-foot straight edge laid parallel with the center line and any

depression exceeding 1/4-inch shall be corrected and brought to the proper grade. All stones disturbed in making replacements or correcting depressions shall be settled into place by carefully ramming or tamping to grade by the use of a hand tamper applied upon a 2-inch board.

C. Each section of pavement must be acceptable to the Engineer, before the joints in that section are filled.

D. Filling Joints: Where flexible joints are called for, the joints shall be filled with stone dust. The stone dust shall be firmly packed in the joints between blocks. Immediately after the joints are filled, the pavement shall be swept clean.

3.02 LAYING BLOCK PAVEMENT ON A RIGID PAVING BASE

A. Granite setts shall be satisfactorily wet when being laid, and each brick shall be laid in cement mortar so as to form full bed, and side joints at one operation. The joints shall not be wider than 1/2-inch except when the setts are laid radially, in which case the narrowest part of the joint shall not exceed 1/4-inch. The setts shall be laid in a workmanlike manner true to line, and whatever practicable the joint shall be carefully struck and pointed on the inside. Pavement shall be laid with a satisfactory bond, as it progresses shall be raked back in course, unless otherwise directed by the Engineer.

B. The edges of granite setts shall meet the edges of all other pavement smoothly and evenly.

C. Protection: All fresh pavement shall be protected from freezing and from drying effect of the sun and wind, and if required, it shall be sprinkled with water at such intervals and for such time as may be directed by the Engineer. Pavement shall be protected from injuries of all sorts, and all portions which may become damaged or may be found defective shall be repaired, or if directed by the Engineer, be removed or rebuilt.

D. Heating: In freezing weather, granite setts shall be heated sufficiently to remove all ice and frost. No pavement shall be laid or re-laid when the temperature is below 25 degrees Fahrenheit.

+ + + END OF SECTION 02304 + + +

SECTION 02308

HEXAGONAL BLOCK SIDEWALK

PART 1 GENERAL

1.01 SCOPE

A. Furnish, install and replace hexagonal block sidewalk as required to complete the Work in accordance with the Specifications and as directed by the Engineer.

1.02 SUBMITTALS

A. Submittals shall be made in accordance with the requirements of the General Conditions of the Contract Documents. In addition, the following specific information shall be provided:

1. Five (5) samples of blocks before starting work. Blocks used on the work shall conform to the approved samples in the opinion of the Engineer.

PART 2 PRODUCTS

2.01 BLOCK

A. Block shall be brown-brown 8-inch asphaltic concrete block of hexagonal shape as manufactured by Hastings Pavement Co., Inc. or equal. The hexagonal block shall be 2-inches thick.

B. Block shall be composed approximately of 6% high melting point oxidized asphalt and 94% graded crushed rock aggregate and mineral filler. The mix shall be compressed to 4,000 lbs. per square inch at a temperature of 300 degrees F by high-speed hydraulic presses.

2.02 CONCRETE BASE

A. The concrete base shall be 3000 psi concrete as specified in Section 03300, Cast-In- Place Concrete.

2.03 BITUMINOUS SETTING BED

A. Asphalt cement to be used in the bituminous setting bed shall conform to ASTM Designation D3381. The viscosity grade shall be A.C. 10 or A.C. 20.

B. The fine aggregate to be used in the bituminous setting bed shall be clean,

hard sand with durable particles and free from adherent coating, lumps of clay, alkali salts, and organic matter. It shall be uniformly graded from coarse to fine and all passing the No. 4 sieve and meet the gradation requirements when tested in accordance with the standard method of test for sieve or screen analysis of fine and coarse aggregates ASTM Designation C136.

C. The dried fine aggregate shall be combined with hot asphalt cement, and the mix shall be heated to approximately 300 degrees F at an asphalt plant. The approximate proportion of materials shall be seven (7) percent cement asphalt and ninety-three (93) percent fine aggregate. Each ton shall be apportioned by weight in the approximate ratio of 145 lbs. asphalt to 1,855 lbs. sand. The Contractor shall determine the exact proportions to produce the best possible mixture for construction of the bituminous setting bed to meet construction requirements.

2.04 NEOPRENE-MODIFIED ASPHALTIC ADHESIVE

A. Adhesive shall have the following characteristics:

Mastic (asphalt adhesive)	
Solids (base)	75± 1
Lbs./Gal	8-8.5 Lbs.
Solvent	Varsol (over l00^0 F flash)
Base (2% neoprene, 10% fibers, 88% asphalt)	
Melting Point ASTM D-36	200^0 F min.
Penetration 77^0 F 100 Gram Load 5 Second (.1 mm)	23-27
Ductility ASTM D113-44 @25^0 C 5 cms/per minute	125 cm. min.

2.05 JOINT FILLER

A. Joint filler shall consist of a mixture of one part portland cement and ten parts sand.

PART 3 EXECUTION

3.01 GENERAL

A. Backfill and compaction shall be in accordance with Section 02225, Trench Excavation and Backfill

3.02 PREPARATION OF SUBGRADE

A. The Contractor shall place a concrete base as specified in Section 03300, Cast-In- Place Concrete.

3.03 LAYING BITUMINOUS SETTING BED

A. To install the setting bed over the base surface, place ¾-inch deep control base directly over the base. If grade must be adjusted, set wood chocks under depth control bars to proper grade. Set two bars parallel to each other to serve as guides for striking board (12 feet long x 2 inch x 6 inch board). The depth control bars must be set carefully to bring the pavers, when laid to proper grade.

B. Place bituminous bed between the parallel depth control bars. Pull this bed with the striking board over control bars several times. After each passage, low porous spots must be showered with fresh bituminous material to produce smooth, firm, and even setting bed. As soon as this initial panel is completed, advance the first bar to the next position in readiness for striking the next panel. Fill up any depressions that remain after removing the depth control bars and wood chocks.

C. The setting bed shall be rolled with a power roller to a nominal depth of ¾-inch while still hot. The thickness shall be adjusted so that when the asphalt block or brick pavers are placed, the top surface of the pavers will be at the required finished grade.

D. A coating of two percent neoprene-modified asphalt adhesive shall be applied by mopping or squeegeeing or troweling over the top surface of the bituminous setting bed so as to provide a bond under the pavers. If it is troweled, the trowel shall be serrated with serrations not to exceed 1/16-inch.

3.04 LAYING HEXAGONAL BLOCK

A. After the modified asphalt is applied, the blocks shall be carefully laid with the best face up and shall be laid in straight courses at right angles to the center line.

B. Joints between blocks shall have a maximum width of ¼-inch.

C. All blocks shall be clean when placed in the pavement. Blocks which in the opinion of the Engineer are not satisfactorily clean shall be washed before placing.

D. In no case shall the bituminous bed or the pavement be disturbed or walked on during the laying of the blocks.

E. After a sufficient number of blocks have been laid, all broken or misshapen blocks shall be marked by the Engineer and removed and replaced by the Contractor.

F. When all objectionable blocks have been removed from the pavement and all replacements made, the pavement shall be swept clean and shall be tested with straight-edge laid parallel with the center line, and any depression exceeding ¼-inch shall be corrected and brought to proper grade. All blocks disturbed in making replacements or correcting depressions shall be settled into place by ramming, and the filler shall then be applied.

G. Each section of pavement must be acceptable to the Engineer before the application of joint filler.

3.05 JOINT FILLER

A. Upon the completion of the work of laying the blocks in each section to the satisfaction of the Engineer, the surface of the blocks shall be swept clean and the joint filled with a mixture of one part portland cement and ten parts sand, thoroughly dry mixed in an approved batch mixer for not less than one and one-half (1 1/2) minutes.

B. All joints shall be filled the same day as the blocks are laid. Joint filler shall not be applied if the blocks are wet or if the air conditions are such that the filler does not readily enter the joints.

C. Joint filler shall be well worked into the joints by means of squeegees or other approved devices operating slowly backward and forward. Squeegeeing shall continue until the joints are full. Immediately after the joints are filled, the pavement shall be swept clean.

3.06 REMOVAL AND REPLACEMENT OF HEXAGONAL BLOCK

A. Existing hexagonal block removed for pipeline installation or hydrant removal and replacement shall be removed for the full width of the sidewalk.

B. Existing concrete slab shall be cut with a concrete saw and removed.

C. After backfill, compaction and preparation of subgrade, pour concrete slab. Slab shall be 3000 psi as specified in Section 03300.

D. Replacement construction shall match existing hexagonal block installation to the satisfaction of the Engineer.

+ + + END OF SECTION 02308 + + +

SECTION 02310

UNIT PAVERS

PART 1 GENERAL

1.01 SCOPE

A. Contractor shall furnish all labor, materials, equipment and incidentals required to provide and install brick pavers and remove and replace brick pavers as required to complete the Work as specified herein and as directed by the Engineer.

1.02 QUALITY ASSURANCE

A. The Contractor shall comply with the applicable provisions and recommendations of the latest editions of the following standards, except as otherwise shown on the Drawings or specified herein.

1. ASTM A185 - Standard Specification for Steel Welded Wire Fabric, Plain, for Concrete Reinforcement.

2. ASTM C144 - Standard Specification for Aggregate for Masonry Mortar.

3. ASTM C150 - Standard Specification for Portland Cement.

4. ASTM C171 - Standard Specification for Sheet Materials for Curing Concrete.

5. ASTM C270 - Standard Specification for Mortar for Unit Masonry.

6. ASTM C902 - Standard Specification for Pedestrian and Light Traffic Paving Brick.

7. Recommended Practices & Guide Specifications for Cold Weather Masonry Construction; International Masonry Industry All-Weather Council.

1.03 SUBMITTALS

A. Submittals shall be made in accordance with the requirements of the General Conditions of the Contract Documents. In addition, the following specific information shall be provided:

1. Data for each product specified in this Section.

2. Documentation as necessary to demonstrate compliance with specified requirements.

3. Samples for Initial Selection: For each distinct unit paver type indicated, submit full sized unit pavers or sections of pavers showing manufacturer's standard textures, patterns, and colors available.

4. Submit samples indicating manufacturer's standard grout colors available.

5. Qualifications Statements: Submit statements indicating compliance with qualifications requirements specified under "Quality Assurance."

6. Maintenance Data: Submit for each product specified in this section. Include cleaning and preventive maintenance instructions.

B. Manufacturer's Qualifications: Firm regularly engaged in manufacture of products specified in this section, and whose products have been in satisfactory use under similar service conditions for not less than 5 years.

C. Installer's Qualifications: Firm regularly engaged in installation of products specified in this section, with a minimum of 5 years of experience.

D. Field-constructed Mock-up:

1. Before beginning installation, construct one mock-up for each required unit paver color, type and pattern; and separate joint treatment indicated.

2. Accepted mock-up shall establish quality of materials, workmanship and appearance to be expected in finished installation.

3. Location: As directed by the Engineer.

4. Approximate dimensions for each mock-up: 4-feet x 3-feet, full thickness.

5. Do not begin paver installation until Engineer has accepted qualities of mock-up

6. Keep mock-up intact throughout construction period.

7. Disassemble and remove mock-up after unit paving work has been completed.

1.04 DELIVERY, STORAGE, AND HANDLING

A. Deliver, store, and handle materials in a manner to prevent damage and deterioration.

B. Mortar and Grout Materials: Store off the ground, covered, and dry. Do not permit exposure of materials to open flame. Do not allow liquid materials to freeze.

1.05 PROJECT CONDITIONS

A. Frozen or Partially-Frozen Materials: Do not install materials which are completely or partially frozen or which are covered or intermixed with frost or ice.

B. Work Exposed to Frost or Freezing Conditions: Do not install pavers on frozen substrates. Work damaged by frost or freezing must be removed and replaced at the Contractor's expense.

C. Air Temperatures 40 Degrees F or Lower: Conform to requirements of the International Masonry Industry All-Weather Council's, "Recommended Practices Guide Specifications for Cold Weather Masonry Construction," Use heated materials. Protect finished sections of work.

D. Hot Weather Limitations: Provide suitable protection when air temperature and humidity levels are capable of causing excessive moisture evaporation from grout and setting beds. If necessary, cool materials before installation.

PART 2 PRODUCTS

2.01 UNIT PAVERS

A. For each distinct paver: color, type, and pattern, provide materials produced by one manufacturer.

B. Provide unit pavers free of defects which would impair strength, durability, or appearance. Provide pavers of uniform coloration, within range specified or approved.

C. Brick Pavers: Solid pedestrian and light traffic paving brick (ASTM C902), sized as indicated.

1. Class SX.

2. Type I.

3. Application PS.

4. Color and texture: As selected by the Engineer to match the existing paver color and texture.

2.02 MORTAR AND GROUT

A. Portland Cement: ASTM C150, non staining.

1. Type I except that Type III may be used during cold weather.

2. Obtain all cement from one manufacturer.

B. Hydrated Lime: ASTM C207, Type S.

C. Aggregate: ASTM C144.

1. Obtain each aggregate from one source.

2. Uniform quality and color.

3. For joints narrower than ¼-inch, modify ASTM C144 gradation as follows: 100 percent passing the No. 8 sieve and 95 percent passing the No.16 sieve.

D. Water: Non alkaline.

E. Latex Additive: Acrylic latex, without retarder, formulated for use in mortar setting beds, bond coats, and grouts, with record of satisfactory use.

F. Mortar and Grout Mixes - General:

1. Do not use additives, including pigments, unless specifically indicated.

2. Use mechanical batch mixer.

3. Mix in accordance with ASTM C270, using cement-to-lime proportions.

G. Setting Mortar for Mortar-Set Paving: ASTM C270, Type M, Proportion Specification.

1. Use as little water as possible when ready for setting of pavers.

2. Surfaces should be barely moist.

H. Bond Coat Mix: Cement slurry with latex additive, proportioned according to additive manufacturer's instructions.

I. Paving Joint Grout for Mortar-Set Paving: 1 part Portland cement, 2 parts aggregate.

1. Use as little water as is necessary to produce a pourable consistency.

2. Add latex additive as recommended by manufacturer.

J. Membrane: Polyethylene film, 4 mils thick, complying with ASTM C171.

K. Steel Welded Wire Fabric: 2-inch by 2-inch - W0.3 X WO.3. Fabric must conform to all requirements of ASTM A185 with the exception of requirements for minimum wire size.

PART 3 EXECUTION

3.01 EXAMINATION

A. Examine areas to receive paving and conditions under which unit pavers will be installed.

B. Verify that related work to be performed before installation of paving has been completed.

C. Notify the Engineer in writing of any conditions which are not in compliance with requirements.

D. Correct any unsatisfactory conditions before installing products specified in this section. Commencement of installation indicates acceptance of conditions.

3.02 PREPARATION

A. Clean unit paver surfaces before setting.

3.03 PAVING

A. Brick Paving - Pedestrian/Light Vehicular Traffic Application:

1. Setting method: Mortar-set.

2. Joint width: 3/8-inch.

3. Paver size: 4-inches by 8-inches by 2-1/4-inches thick.

3.04 SETTING PAVERS - GENERAL

A. Edging: Before beginning installation of unit pavers, provide edging as

indicated.

B. Install unit pavers in accordance with manufacturer's recommendations.

C. Install full-sized, uncut unit pavers whenever possible.

1. Cut pavers as required to produce indicated configuration and to join neatly with adjacent work.

2. Exposed edges: Cut straight and true.

D. Provide openings as required to accommodate other work. Close up such openings, after other work is complete, with paving that matches paving already set.

E. Set pavers accurately, in configurations to match existing pattern with edges and faces aligned according to established relationships and required tolerances. Provide consistent joints of indicated dimensions.

F. Setting Tolerances:

1. Maximum vertical offset between top of each unit paver and tops of adjacent pavers: 1/16-inch.

2. Maximum variance from finished surface: 1/8-inch in 2-feet and ¼-inch in 10 feet.

3.05 MORTAR-SET PAVING

A. Concrete subbase: Slab shall be as specified in Section 03300.

B. Concrete subbase preparation: Remove dirt and debris.

C. Membrane: Place over entire substrate, lapping edges a minimum of 4 inches.

D. Place welded wire fabric reinforcing; lap edges at least 1 full mesh; support fabric so that, when mortar is installed, reinforcing will be located in center of setting bed depth.

E. Install setting bed to uniform thickness required for setting of paving to grades indicated.

F. Before setting, thoroughly wet pavers.

G. Brick pavers: Do not install if free moisture is present on brick faces.

H. Install pavers before mortar bed sets; remove mortar that has set. Apply bond coat to setting bed and to bottom of paver just before placing.

I. Tamp pavers to achieve complete contact with setting bed. Make each paver level immediately, before set of mortar.

J. Grout joints after setting bed has set.

1. Fill joints completely; keep grout off of exposed surfaces of pavers.

2. Tool joints lightly after grout has set.

3. Keep grout damp for 7 days, except as otherwise indicated by latex additive manufacturer.

K. Do not allow traffic on paving during installation for 24 hours after completion of joints.

3.06 ADJUSTING AND CLEANING

A. Remove and replace paving that:

1. Is discolored, cracked, nicked, or defective in any way.

2. Does not match approved samples.

3. Does not match approved mock-up.

4. Has defective joints.

5. Does not comply with requirements indicated.

B. Replace pavers in a manner which results in the paving showing no evidence of replacement work.

C. Clean mortar-set paving as soon as possible, but not sooner than 7 days after completion of work.

1. Do not use cleaning tools or materials which could damage paving.

2. Do not use acid unless approved by unit paver supplier.

3.07 PROTECTION

A. Protect completed work, and maintain protection until substantial completion.

3.08 REMOVAL AND REPLACEMENT OF PAVERS

A. Existing brick pavers removed for pipeline installation and hydrant removal and replacement or damaged by the Contractor shall be removed in rectangular sections the full width of the sidewalk.

B. Existing concrete slabs shall be cut with a concrete saw and removed.

C. After backfill, compaction and preparation of subgrade, pour concrete slab. Slab shall be 3000 psi concrete as specified in Section 03300.

D. Replacement construction shall match existing brick paver installation including concrete slab.

+ + + END OF SECTION 02310 + + +

SECTION 02399

CREEK CROSSINGS

PART 1 GENERAL

1.01 SCOPE

A. Furnish all labor, materials, equipment and incidentals required to complete the construction of the creek crossings as shown on the Drawings and/or specified herein.

B. The work will include all excavation (except rock), sheeting, furnishing and installing the pipe, concrete encasement, backfilling the trench, rip rap, water handling, diversion of flow, restoring channel and grading and all other work necessary to complete the crossing.

PART 2 PRODUCTS

(NOT USED)

PART 3 EXECUTION

3.01 CONSTRUCTION METHODS

A. The procedure and methods of diking, by-passing or otherwise restricting the flow of the creek during construction, excavating the trench and installing the pipe will be at the option of the Contractor, subject to the review of the Engineer and the requirements of the Contract. Before start of work, the Contractor shall submit a written outline of his proposed methods and supporting data, for review by the Engineer.

B. Excavation in earth and rock, if encountered for the pipe, shall conform to the requirements specified under Section 02225, Trench Excavation and Backfill. The pipe trench shall be true in grade and alignment, and of sufficient width and depth to provide space for properly laying the pipe.

C. Backfilling of the pipe shall be done with select excavated granular material. The top 18 inches (minimum) of the trench shall be riprap as specified in Section 02125.

D. The banks of the creek and areas disturbed during pipe installation shall be restored to their original or better condition in accordance with requirements as specified in Section 02125 and details shown on the Drawings.

E. Upon completion of the crossing, the creek channel shall be cleaned, the pipe shall be tested and the site cleaned of all debris.

+ + + END OF SECTION 02399 + + +

SECTION 02405

Blasting

PART 1 – GENERAL

1.01 SCOPE

A. This Section covers the work necessary for the use of explosives and blasting in connection with rock excavation for open cut trench excavation, slip trenches, shafts and other excavations required by the Contractor. Limit the use of explosives in the works to the practicable minimum by utilizing mechanical means of excavation to the maximum feasible extent. Blasting shall be limited to the extent of the work approved by the Engineer and shall not be used outside the extent in plan of the work sites. Controlled blasting is excavation of rock in which the blast hole size, spacing, depth and burden, and the charge size, depth and delay sequence are carefully controlled to excavate the rock to the required limits. Controlled blasting minimizes overbreak and fracturing of the rock beyond the design lines.

B. Specifications in this Section govern blast design, blast limitations, explosive materials, equipment, labor and supervision for transportation and storage of explosives, drilling and loading of blast holes, protection of existing facilities, test blasts, and damage repairs due to Contractor's blasting operations.

1.02 RELATED SECTIONS

A. The Work of the following Sections specifically apply to the Work of this Section. Other Sections of the Specifications, not referenced below, shall also apply to the extent required for proper performance of Work.

1. Section 02200: Earthwork

2. Section 02730: Sewer and Accessories

3. Section 02140: Dewatering

1.03 GENERAL

A. Perform blasting only with a permit from the appropriate jurisdictional agency. Necessary permits include an Explosives License issued by the Georgia Safety Fire Commissioner, and users' permits obtained from Fulton County and from the City of Atlanta. Obey all local, State, Federal and other Governmental regulations applying to transportation, handling, storage and use of explosives, including the requirements of the Bureau

of Fire Prevention of the City of Atlanta, Fulton County and the State of Georgia, and applicable regulations of the Occupational Safety and Health Administration.

B. Perform blasting operations in trenches, shafts and other open excavations only during daylight hours. No blasting shall be performed on Saturdays, Sundays or on the public holidays observed by the City and listed in the Special Conditions. If an emergency prevents a blast being fired during the permitted hours and the holes are loaded, the blast shall be fired as soon as safety allows. In the event that blasting is found necessary outside the permitted hours, the Contractor shall inform local residents within hearing and vibration range and the jurisdictional agencies prior to firing. The Contractor shall report in writing to the Engineer the following day the conditions which required it to blast outside the permitted hours.

C. Furnish, install and operate at each site where blasting is being performed using electric methods of initiation an approved thunderstorm monitor and lightning warning device. Make adequate provisions for transmitting alarms from the device to all locations where preparation for blasting using electric initiation are in progress. Install and maintain the system in accordance with the manufacturer's recommendations. Test the entire monitoring and alarm system for satisfactory operation at intervals not exceeding two weeks, and suspend blasting operations until any defects have been corrected.

D. The blasting supervisor shall be experienced in predicting and evaluating the effects of blasting on nearby structures such that vibration levels at these structures do not exceed a level which will damage the structures or their contents, or cause undue alarm to their occupants. Planning and evaluation of blasting operations shall be performed by the approved blasting supervisor. All blasting plans, test-blasting plans and revisions shall be submitted and signed by the blasting supervisor.

1.04 DEFINITIONS

A. Smoothwall Blasting (Trim Blasting): A controlled blasting technique used to produce smooth walls in a trench or shaft Trim charges are decoupled to reduce the linear charge density and are placed in holes with reduced spacing and are fired after main charge.

B. Peak Particle Velocity (PPV): The maximum of the three ground vibration velocities measured in the vertical, longitudinal and transverse directions. Velocity units are expressed in inches per second (ips).

C. Air-Overpressure: Temporary changes in ambient air pressure caused by blasting. Air-overpressure is expressed in units of psi or dB. Measurements

for blasting are made with microphones having a flat frequency response for over-pressure in the 2 to 200 Hz range. A-weight or C-weight microphones shall not be used for these measurements.

D. Occupied Building: Structure on or off construction limits that is occupied by humans or livestock.

E. Residential Building: Includes single and multi-family dwellings, hotels, motels and any other structure containing sleeping quarters.

F. Scaled Distance: A factor describing relative vibration energy based on distance and charge-per-delay. For ground vibration control and prediction purposes, Scaled Distance (Ds) is obtained by dividing the distance of concern (D) by the square root of the charge-per-delay (W) - $Ds=D/(W)^{1/2}$.

G. Charge-per-Delay (W): For purposes of vibration control, any charges firing within any 8-millisecond time period are considered to have a cumulative effect on vibration and air-overpressure effects. Therefore, the maximum charge-per-delay equals the sum of the weight of all charges firing within any 8-millisecond time period. For example, if two 10 lb. charges fire at 100 ms and one 15 lb. charge fires at 105 ms, the maximum charge per delay would be 35 lbs.

H. Line Drilling: A method of controlling overbreak, in which a series of very closely spaced holes are drilled at the perimeter of the excavation. Line holes are generally not loaded with explosives; however, in some applications alternating holes may be loaded with light charges using detonating cord.

I. Pre-splitting: A blasting technique in which the perimeter charges are detonated first in the firing sequence or as a separate blast ahead of production blasting. This technique is designed to generate a fracture in the plane of the pre-split holes drilled along the perimeter of the excavation.

J. Production Holes: Blast holes in the main body of the rock mass being removed by drilling and blasting.

K. Stemming: Crushed stone, tamped clay or other inert earth material placed in the unloaded collar area of blastholes for the purpose of confining explosive charges and limiting rock movement and air overpressure.

L. Buffer Holes: Holes with reduced energy charges drilled adjacent to smoothwall, trim or open line-drilled holes at the perimeter of the excavation. The explosive charge in buffer holes is generally between 50 and 75 percent of the charge used in normal production blastholes. Buffer holes are usually drilled parallel to adjacent holes at the excavation perimeter.

M. Primary Initiation: The method whereby the blaster initiates the blast(s) from a remote and safe location. Primary initiation systems use pneumatic tubing or shock-tubes to convey firing energy from blasters to blast locations.

N. Sub-drilling: The portion of the blasthole that is drilled below or beyond the desired excavation depth or limit. Subdrilling is generally required to prevent the occurrence of high or tight areas of unfractured rock between blastholes.

O. Surface Blasting: All excavations where surface blasting techniques are required.

P. Controlled Blasting: Excavation in rock in which the various elements of the blast, including hole size, position, alignment, depth, spacing, burden, charge size, distribution and delay sequence are carefully controlled to excavate the rock to the desired lines with a relatively uniform surface with minimal overbreak and fracturing of rock beyond the design excavation limits and to maintain resulting noise, overpressure and peak particle velocity within specified maximum limits.

Q. Prohibited Persons: Persons prohibited from handling or possessing explosive materials as defined by the seven categories described in Section 555.11 of 27 CFR ATF Rules).

R. Delay: Distinct pause of pre-determined time between detonations of single charges or groups of charges.

1.05 REFERENCED STANDARDS

A. U.S. Department of Justice, Alcohol, Tobacco and Firearms and Explosives Division (ATF27 CFR Part 555, Implementation of the Safe Explosives Act, Title XI, Subtitle C of Public Law 107-296; Interim Final Rule).

B. Institute of Makers of Explosives

1. Dos and Don'ts - Instructions and Warnings for Consumers in Transporting, Storing, Handling, and Using Explosive Materials

2. Destruction of Commercial Explosives

3. Suggested Code of Regulations for the Manufacture, Transportation, Storage, Sale, Possession and Use of Explosive Materials

4. Safety in the Transportation, Storage, Handling and Use of Explosive Materials

5. Safety Guide for the Prevention of Radio Frequency Radiation Hazards in the Use of Electric Blasting Caps

C. National Fire Protection Association (NFPA)

1. NFPA 495 - Code for the Manufacture, Transportation, Storage and Use of Explosive Materials, 1985 Edition

2. NFPA 498 - Standard for Explosives, Motor Vehicle Terminals, 1985 Edition

D. U.S. Department of Labor, Occupational Safety and Health Administration (OSHA), Construction Standards and Interpretations 29 CFR Part 1926, Subpart U, Section 1926.900, “Blasting and Use of Explosives”, final rule dated December 16, 1972.

E. Official Code of Georgia (OCGA); Code Section 25 - Georgia Blasting Standards Act of 1978, Code Section 25-9-1, et seq.

F. Vibration Subcommittee of the International Society of Explosive Engineers (ISEE), blast monitoring equipment operation standards (1999).

1.06 QUALITY CONTROL

A. The design and execution of blasting shall be performed under the on-site supervision of a licensed blaster certified in the State of Georgia.

B. The Contractor shall perform blast monitoring as required to satisfy its legal obligation relative to all permits and all applicable federal, state and local codes, laws, regulations and ordinances, and its contractual responsibilities, including safety.

C. The Engineer may perform blast monitoring to verify conformance with regard to air-overpressure (noise) and peak particle velocity criteria defined by this Section.

D All persons that handle explosive materials, have control over them, or access to them, must not be prohibited persons, as defined in Section 555.11 of 27 CFR (ATF Rules).

1.07 SUBMITTALS

A. Submittals shall be made in accordance with the requirements of the General Conditions of the Contract Documents in writing prior to or at the time indicated. Failure to do so will prevent progression of the Work to the next stage:

B. Contractor Qualifications and Evidence of Experience: Submit resumes of proposed blasting supervisor or supervisors to the Engineer. Resumes shall

contain listing of experience, references with phone numbers and copies of all required blasting licenses. **(60 Days Prior to Blasting)**

C. Blasting Supervisor Experience: Provide evidence to confirm that the blasting supervisor (blaster-in-charge) has a minimum of 10 years experience, directly related to the specific types of excavation blasting overseen. The blasting supervisor shall be able to document the completion of at least five projects of similar scope. Furthermore the blasting supervisor shall have experience in monitoring blasting operations (test blasts and production blasts), interpreting ground vibration, air overpressure, and impulse amplitudes for similar construction projects, and preparation of all blasting plans, test-blasting plans, and revisions to any of these plans. All blasting plans, test-blasting plans and revisions shall be submitted and signed by the blasting supervisor. **(60 Days Prior to Blasting)**

D. Blasting Supervisor Qualifications: The blasting supervisor and supervising shift foremen shall be properly qualified and licensed in accordance with applicable federal, state and local government regulations. Necessary permits include an Explosives License issued by the Georgia Fire Safety Commissioner. The blasting supervisor shall work with the Georgia Licensed Structural Engineer, to be used for building surveys as required in Section 02020, paragraph 3.01, to determine the most effective and expedient seismic monitoring plan, where required. **(All Qualifications & Licenses To Be Provided 60 Days Prior to Blasting)**

E. Permits: Submit a copy of all applicable permits and licenses for transportation, storage, and use of explosives to the Engineer prior to the start of blasting operations. Submitted permits must include a copy of Federal ATF blasting license listing all responsible persons, blasting use and storage permits issued by the Georgia State Fire Marshals Office, and any other necessary local permits. No explosives can be brought to any work sites until all necessary permits have been submitted to the Engineer.**(30 Days Prior to Blasting)**

F. Regulations: Contractor shall obtain at least two copies of all applicable federal, state and local codes, laws, regulations and ordinances regarding the use of explosives. One copy of these codes, laws, regulations and ordinances shall be submitted to the Engineer at least 15 days prior to blasting. The second copy shall be maintained on-site in the Contractor's office, for review by all Contractor personnel involved in blasting. **(30 Days Prior to Blasting)**

G. Blast Designs and Safety Measures: Submit to the Engineer the following information for initial test blasts and proposed production blast design for each shaft or open cut trench excavation as appropriate:

1. Number, location, diameter, depth and orientation of drill holes on a scaled drawing of the excavation;

2. Type of explosive and weight of charge in each hole;

3. Type and nomenclature of detonators;

4. Type and distribution of stemming used to fill hole collars for charge confinement;

5. Total amount of explosives in the blast and maximum charge-per-delay;

6. Delay arrangement showing delay period in each hole;

7. Description of the proposed blasting system; and type of firing source;

8. Specific measures taken to protect structures, buried utilities and other facilities that may be potentially affected by blasting operations;

9. Type and methods of shaft covers, matting and containment of blast area to mitigate fly rock;

10. Description of and locations of signage used to announce blast warning signals to any persons that might enter blast areas;

11. Clearing, guarding and communication procedures to confirm that all persons are evacuated to safe areas and that blast areas are secured prior to blasting;

12. Prediction calculations for noise (air-overpressure) and peak particle velocity (PPV) at the closest structure and at other adjacent structures, pipelines or facilities that maybe potentially affected by blasting operations;

13. Any redesign of the blasting program shall be submitted to the Engineer.
(15 Days Prior to Blasting)

H. Blasting Safety and Security Plans:

1. A complete description of the clearing and guarding procedures that will be employed to ensure personnel, staff, visitors, and all other persons are at safe locations during blasting. This information shall include details regarding visible warning signs or flags, audible warning signals, method of determining blast area zones, access blocking methods, guard placement and guard release procedures, primary initiation method, and the system by which the blaster-in-charge will communicate with site security guards.

2. Detailed description of how explosives will be safely stored, transported and used at the various work sites. Plans shall explain how storage magazines and explosive transport vehicles will satisfy all applicable regulations. This plan shall also indicate how explosives will be inventoried, secured and guarded to prevent theft or unauthorized use of explosives.

3. If the Georgia State Fire Marshal authorizes overnight storage of the explosives, the Contractor must submit a detailed storage plan that includes scaled maps indicating proposed location of detonator and explosives that will be stored overnight, distances to nearest occupied buildings, roadways and other limiting items in the American Table of Distances.

4. Include Material Safety Data Sheets (MSDS) and specific details about hazard communication programs for employees.

5. Equipment that will be used to monitor the approach of lightning storms and in the event of such, evacuation and site safety security plans.

6. Contingency plans for handling of misfires caused by cut-offs or other causes.

7. Fire prevention plan details, including smoking policies, procedures and limitations for work involving any open flames or sparks, description and location of all firefighting equipment, and fire fighting and evacuation plans.

8. Initial and ongoing blasting and fire safety training programs.

9. Description of the personal protective equipment that will be used by the Contractor's personnel, including but not limited to, safety glasses, hard-toe footwear, hard hats and gloves.

10. Description of blast monitoring equipment and listing of individuals that will operate such equipment. Submittal shall indicate that all equipment meets the standards defined in Article 2.02 of this Section.

11. The Contractor’s Safety Representative shall ensure that ongoing blasting work complies with all applicable regulations.

12. Submit copies of ATF Employee Possessor questionnaire forms (OMB No. 1140-0072) or ATF letters of clearance for all employees that will possess explosives for this work as defined in 27 CFR Part 555. Contractor employees, without submitted evidence of satisfactory ATF clearance, must not handle, control or have access to explosive materials.

13. Ground vibration and air-overpressure monitoring records: submit two copies of all 4-channel monitoring records done independently of the monitoring performed by the Engineer.

14. Deliver to the Engineer, 15 days prior to the start of blasting at any location, two bound copies of the property condition inspection reports (condition survey) containing all field notes, sketches, diagrams, photos and videos as described by the Engineer.

(15 Days Prior to Blasting)

I. Blasting Records: Maintain a record of each blast detonated. Within one working day following each blast, the blasting records and information for each blast detonated shall be submitted to the Engineer with the following information:

1. Depth of blast holes and the location of the blast point in relation to Project stationing;

2. Type, strength and quantities of all explosives, types and quantities of detonators, powder factor (lb/cy), and actual firing times of all charges;

3. Total explosive loadings per round and maximum charge per delay;

4. Type of rock blasted;

5. Reference to approved blast design submittal noting any modification;

6. Time spent scaling rock and approval of rock scaling by designated individual;

7. On a diagram of the approved blast pattern indicate any holes not drilled, drilled but not loaded, changes in spacing or in pattern of delay charges or in loading of holes. Include notes explaining why changes were made;

8. Submit an evaluation of the blast indicating tights, areas of significant overbreak and any recommended adjustments for future blasts;

9. Comments by the blaster in charge regarding any misfires, unusual results, or unusual effects;

10. Date and exact firing time of blast; name of person in responsible charge of loading and firing and blaster permit number;

11. Signature and title of person making recording entries;

12. Record of peak overpressure: Two copies of all blast vibration monitoring data obtained independent of monitoring performed by the Engineer. Submit hard copies of 4-channel waveforms for each blast;

13. Any other records required by federal, state and local codes, laws, regulations and ordinances.

(One day after Blasting)

J. Notification:

1. For all work sites prior to starting blasting, the Contractor shall notify the appropriate local municipal officials, above- and below-ground utility owners, the general public expected to be potentially affected of the Contractor's intent to conduct controlled blasting operations. Notice shall be given to all operators of all buried pipes, cables, conduits and overhead utility lines and poles located within a 200-foot radial distance of the blast area.

2. Notification to appropriate local municipal officials and utility owners or operators shall be done in writing, at least 48 hours prior to the start of blasting at a particular site or sooner if so required by any applicable local law or regulation, and shall indicate the expected frequency of blasting, hours that blasting might occur and the expected date that blasting will be completed. Upon completion of blasting at the particular site, utility owners or operators shall be notified that blasting has ceased in the area for the duration of the Project.

3. The Contractor shall furnish the Engineer with a list of those parties notified in accordance herewith prior to the start of such blasting. The list shall include names, addresses and telephone numbers.

4. The Contractor must submit copies of written notification letters sent to the responsible fire protection agency for any sites where explosives are stored overnight. These letters shall be submitted to the Engineer at least 48 hours before any explosives are stored at the site. These letters must be submitted by the Contractor to the responsible fire protection agency, 48 hours before explosives are stored at the site.

1.08 PRODUCT DELIVERY, STORAGE AND HANDLING

A. Deliver all explosives to magazines by land transportation in accordance with all applicable federal, state and local codes, laws, regulations and ordinances.

B. Storage of Explosives

1. Transportation, use and storage of explosives shall be as prescribed by the most stringent of the rules promulgated by all federal, state and local codes, laws, regulations and ordinances, and these Specifications.

2. Initiation devices shall not be stored, transported, or kept in the same place in which other explosives are stored, transported, or kept.

3. Only those explosive materials required for a 24-hour period shall be allowed at the construction sites. Storage of explosives during non-blasting periods is not permitted and the day-storage magazine shall be empty during these periods. If storage permits are obtained, the maximum amount of explosives must not exceed limits set by ATF rules (American Table of Distances).

4. No statement in these Specifications shall be considered to relieve the Contractor from sole responsibility for the safe transportation, use and storage of explosives.

1.09 JOB CONDITIONS

A. Extra caution and skill will be required to accomplish the Work in a satisfactory manner. Blasting must be safely performed in close proximity to residential communities and other structures. Effects of blasting must also be controlled to maintain the integrity of the grouted rock adjacent to the tunnel and shaft excavations to minimize groundwater inflows. The Engineer will exercise its prerogative to examine carefully the qualifications of any persons whose knowledge and skills may bear on the outcome of the Work. In addition, the Engineer may reject any person who is deemed unqualified for any tasks that may be required.

B. Methods of construction shall be such as to ensure the safety of the Work, Project participants, the public, third parties, and adjacent property, whether public or private. All work shall comply with all federal, state and local codes, laws, regulations, and ordinances. The Contractor is solely responsible for maintaining safe working conditions at the jobsite at all times.

PART 2 – PRODUCTS

2.01 MATERIALS

A. Only explosive and initiation devices packaged by federally-licensed explosives manufacturing firms shall be used in blasting. All explosives and Blasting agents to be used underground shall meet the Fume Class I requirement of the Institute of Makers of Explosives (IME). This restriction does not apply to detonation cords that may be used for trunk lines or in controlled perimeter blasting charges.

B. Only packaged or cartridge type, non-flowing explosives shall be used in the works. Black powder and nitroglycerine are prohibited for all blasting.

C. Non-electric detonating devices shall be used.

D. Only explosives designed and manufactured for smoothwall (trim) blasting shall be used in perimeter holes for blasting in the shafts, trenches and diversion structure excavations. The linear charge-weight-per-foot of explosives used in shaft perimeter and tunnel back and rib holes shall not exceed 0.4 lb/ft. This limitation does not apply to the primer stick, which must not weigh more than 0.5 pounds. Cartridge configurations and detonating cord shall be included in the linear charge weight-per-foot.

E. Explosives, blasting agents, primers, initiators, and ancillary blasting materials shall be kept in original packaging with clearly marked date codes. All explosives and initiating devices used shall be less than one year old.

F. If the Engineer determines that a blasting product appears to be in a damaged or deteriorated condition, the suspect product shall not be used until its condition can be determined. Products found to be damaged or in a deteriorated condition shall be immediately returned to the supplier for safe disposal.

2.02 BLAST MONITORING EQUIPMENT

A. Equipment for on-site and off-site particle velocity and air overpressure monitoring shall be 4-channel (one overpressure and three seismic channels) units capable of digitally storing collected data. Equipment must be capable of printing ground motion time histories and summaries of peak motion intensities, frequencies and USBM RI8507 PPV frequency plots. Printed report records must also include date, time of recording, operator name, instrument number and date of last calibration.

1. Instruments shall have a flat frequency response between 2 and 250 Hz for particle velocity and from 2 to 200 Hz for air-overpressure.

2. The digitizing sampling rate for peak particle velocity and air overpressure measurements shall be at least 1,024 samples per second.

3. Seismographs shall be capable of performing a self-test of velocity transducers and printed event records shall indicate whether or not the sensor test was successful.

4. Seismographs used for off-site compliance monitoring shall be capable of recording overpressure from 100 to 148 dB-L, and particle velocity from 0.05 to 5.0 inches/second.

5. Systems shall be capable of providing printed event reports that include all peak measurements, frequencies and complete waveform plots.

6. Seismographs shall have adequate memory to digitally record the entire duration of the blast-induced motion.

7. All seismograph/software systems shall be capable of saving back-up copies of all event files.

8. If the frequency of blast-induced ground motion for close-in blasting is expected to exceed 250 Hz, monitoring shall be done with instruments that measure acceleration with intensities up to 10 gs and at frequencies between 200 and 5,000 Hz.

B. The Contractor shall supply the Engineer with four blast monitoring units as described in Article 2.02, Paragraph A, for the duration of the blasting and for each area of the project where blasting is taking place. The Contractor shall provide for annual calibration for each of the blast monitoring units and any repair or maintenance required.

2.03 CONDITION SURVEY

Prior to the commencement of any shaft or open cut trench blasting operation, a pre-construction survey shall be conducted as directed by the Engineer.

PART 3 – EXECUTION

3.01 GENERAL BLASTING LIMITATIONS

A. Perform blasting operations in trenches, shafts and other open excavations only during daylight hours as noted in paragraph 1.03.

B. Blasting vibration and air-over pressure (noise) limitations are defined in paragraphs 3.05 and 3.06 below.

3.02 WARNING SYSTEM

A. The Contractor shall erect signboards of adequate size stating that blasting operations are taking place in the area, and such signs shall be clearly visible at all points of access to the area. These signs shall also clearly display the audible warning signals (horn signals) that will be used to warn all people in the area of the impending blast.

B. An audible blast warning system shall be established, publicized, and operated only during blasting hours.

C. The Contractor shall operate a system to ensure that no personnel remain underground during blasting operations and blasting operations shall not be undertaken until it can be demonstrated that all personnel are accounted for and in a safe location.

3.03 BLASTING OPERATIONS

A. The Engineer shall be notified 24 hours before blasts occur at any specific location. The Contractor shall provide the Engineer with a schedule for all blasts and shall notify the Engineer if any blast is delayed for more than one hour. However, the Contractor will be allowed to re-shoot missed holes and tights, as they are uncovered without advance notice to the Engineer.

B. Acceptable Controlled Blasting methods will be those utilizing smooth wall blasting, cushion blasting, and line drilling techniques. Use of “pre-splitting” in shafts and surface excavations is specifically prohibited. Maximum drill round lengths, including subdrilling shall not exceed 0.75 times the minimum dimension of the tunnel or shaft opening. The first eight feet of shaft or open cut trench excavation shall utilize rounds that do not exceed four feet in length. The 4-foot round length restriction does not include subdrilling which shall not exceed 6 inches.

C. Holes shall not be charged with explosives at the same time that drilling or other mechanized equipment not needed to charge the round is being operated within 50 feet of the blast area.

D. The first blasting operation shall be conducted by the Contractor as a test case. The first test blasts shall be no larger than 25 percent of the planned production design blast sized as measured by charge-weight-per-delay. The second and third test blasts shall be no larger than 60 and 100 percent respectively of the planned production design blast. Alternate test blasting plans may be proposed by Contractor with approval of Engineer. After each test blast and review of test blasting data, the Contractor and Engineer shall meet to review the program. Modifications to the blasting program may be required as a result of this review. Drilling and delay patterns, amount and type of explosive to be used in subsequent production blasts shall be revised according to the results of the test case.

E. Monitoring and recording of air-overpressure and vibration will be performed by the Engineer for every blast round. The results will be provided to the Contractor within 24 hours of the blast, for review. Changes in drilling and delay patterns and amount of explosives shall be made when tests indicate vibrations and/or overpressures in excess of that specified herein. Any major changes in the production blast design shall be submitted to the Engineer.

F. All blasts in shaft and open cut trench excavations shall be covered with a sufficient number of steel cable mats or other substantial covering device in

order to prevent injury to persons and property, including the structure and equipment used in connection with shaft or open cut trench operation, from flying rock or other material

G. All transportation of explosives on the surface or underground and any handling, blast charging or tie-in operations shall be stopped immediately upon the approach of an electrical storm, and all persons shall immediately be evacuated from the blasting area to a place of safety. Persons underground shall be notified of the approach and cessation (all clear) of an electrical storm, each by means of different signals. In shafts, trenches or other excavation handing explosives, loading of holes, connecting up or firing of charges shall not be performed during an electrical storm and all persons shall withdraw to a safe distance from a partially or totally loaded face. During such storms, explosives on the surface shall be left in OSHA-approved transport containers, delivery vehicles, day-storage boxes or in approved storage magazines. At all times, explosives shall be watch guarded and secured by the Contractor's personnel that are in safe locations.

H. All light and power circuits shall be disconnected and/or removed to a point not less than 100 feet from the face while explosives are being transported into the area and while the loading operations are taking place. During the loading operations only OSHA approved lighting may be used.

I. Use dust suppressant measures with air-powered or air-flush rock drilling equipment.

J. Wet down the muck pile after blasting to control dust during mucking operations.

3.04 SHAFT BLASTING

A. Excavation to final rock surfaces shall be carried out using smoothwall blasting techniques to minimize the damage to the finished rock surface.

B. The perimeter holes for smoothwall blasting shall conform to the following requirements:

1. Hole spacing shall not exceed 18-inches unless a variance is approved by the Engineer. Justification to increase hole spacing shall be based on results from the test blasts.

2. Explosives, excepting the primer stick, shall be distributed evenly and de-coupled from wall of hole. The maximum charge-weight-per-foot of the primary column explosive (loading factor) shall not exceed 0.4 lb/ft. The weight of the primer stick or booster used in smoothwall-perimeter holes shall not exceed 0.5 pounds.

3. Burden shall be between 1.2 and 1.5 times the hole-spacing.

4. Lookout of perimeter holes shall be limited to the minimum necessary to collar the next round.

C. The first eight feet of shaft excavations shall utilize rounds that do not exceed four feet in length.

3.05 VIBRATION/AIR-OVERPRESSURE (NOISE) LIMITATIONS

A. Air- overpressure shall not exceed 130 decibels when monitored with an instrument with a 2-hertz high pass at any occupied structure. Air overpressure monitoring shall take place at the nearest residential or business structures susceptible to damage or claims of annoyance.

B. Heavy shaft covers constructed with steel frames covered with wood planking with a minimum thickness of 2.5 inches shall be placed over construction shaft collars to reduce noise and contain flying debris generated by all shaft rounds and open cut trench rounds that could cause flyrock to be ejected from the shaft or exceedence of the air overpressure limits as defined by this section. Overlapping conveyor belt skirts shall be attached to the sides of the shaft cover to close openings between the shaft collar and cover. To meet the specified 130 dB air-overpressure limit, the Contractor should be prepared to install additional sound reducing materials on the shaft cover. If the shaft cover is substantial enough, the Engineer may allow the Contractor to discontinue covering shaft rounds with blasting mats.

C. All measurements of blast-induced air-overpressure shall be done in accordance with the standards developed by the Vibration Section of the International Society of Explosives Engineers-1999.

3.06 VIBRATION LIMITATIONS AND CONTROL

A. The maximum intensity of motion in the vertical, longitudinal and transverse directions, measured in the ground near any building or other surface structure shall not exceed 0.5 inches per second at any frequency of motion

B. The maximum intensity of motion in the vertical, longitudinal and transverse directions, measured on the ground above any buried utility lines or pipes shall not exceed 4 inches per second at any frequency of motion.

C. The Contractor shall monitor each blast with four (4) seismographs located, as approved, between the blast area and the closest structures and/or utilities. The seismographs used shall be capable of recording Particle Velocity and frequency for three (3) mutually perpendicular components of vibration in the range generally found with Controlled Blasting.

D. All measurements of blast-induced ground motion shall be performed in accordance with the standards developed by the Vibration Section of the International Society of Explosives Engineers – 1999 not to exceed:

1. At structures and utilities in the vicinity of blasting operations, the peak particle velocity resulting from blasting shall not exceed:

   a. Frequency < 3 Hz: 0.2 inches/second.
   b. Frequency 3 - 10 Hz: 0.5 inches/second.
   c. Frequency 10 - 40 Hz: varying linearly 0.5 to 1.0 inches/second.
   d. Frequency > 40 Hz: 1.0 inches/second.

The above limits are adopted from modified blasting level criteria given in U.S. Bureau of Mines Recommendations RI-8507.

2. At the nearest structure liable to damage from air blast overpressure, the mean peak air blast overpressure shall not exceed 0.01 psi.

Measure readings for peak particle velocity in three orthogonal directions by equipment approved by the Engineer that is either continually recording or triggered by a preset level of vibration. Determine particle velocity in each frequency range by spectral analysis. Zero crossing method to determine frequency is not acceptable.

C. If the shaft or open cut trench to be excavated by blasting is for a pipe less than or equal to 18-inch diameter then existing structures within 25-feet of the edge of the shaft or open cut trench shall receive a full structural survey by a Georgia Licensed Engineer. If the shaft or open cut trench to be excavated by blasting is for a pipe greater than 18-inch diameter then existing structures within 50-feet of the of the edge of the shaft or open cut trench shall receive a full structural survey by a Georgia Licensed Engineer.

D. Exercise all possible care in drilling and blasting operations to ensure the stability of the remaining rock and to keep overbreak to a minimum. Controlled blasting techniques shall be used.

E. At each work site where blasting is being performed, erect signboards of adequate size stating that blasting operations are taking place in the work site and such signs shall be clearly visible at all points of access to the work site.

F. Monitor the first blast at each location as a test case, and modify the initial blast design for that location if the monitoring record indicates that the vibration and air blast overpressure limits were exceeded or may be exceeded in subsequent blasts. Resubmit the blast design to the Engineer. Continue vibration recording and air blast overpressure

monitoring for every blast, and further adjustments to the blast design shall be made when the records indicate vibration or air blast overpressure in excess of the established limits.

G. Before the firing of any blast where flying material may result in damage to persons, property or the work, cover the rock to be blasted with a suitable matting to prevent flying debris. After a blast is fired, remove all loose and shattered rock or other loose material which may endanger the structure or the workers, and make the excavation safe before continuing with the work. Carry out similar checks on previously excavated sections at least every 48 hours and recheck the support system, tightening lagging and blocking, and adding rock dowels, mesh and other support measures as required. Before drilling new blast holes, thoroughly clean the face and examined the face for holes containing undetonated explosive.

H. In the event that damage occurs due to blasting work, suspend all blasting immediately and make a report to the Engineer. Before resuming blasting, adjust the blast design and resubmit it to the Engineer, and take any other appropriate measures to control the effects of blasting.

I. If blasting causes excessive overbreak or excessive fracturing of the surrounding rock, or is otherwise detrimental to the work, modify the blast design as necessary to achieve the desired result, and resubmit it to the Engineer.

3.07 SUSPENSION OF BLASTING

A. Blasting operations may be suspended by the Engineer for any of the following reasons:

1. The Contractor's safety precautions are inadequate.

2. Air overpressure or ground motion levels exceed specified limits.

3. Existing structural conditions on and off site are aggravated and are damaged by blasting.

4. Blasting cause’s instability of slopes or causes damage to rock outside the prescribed limits of excavation.

5. The results of the blasting, in the opinion of the Engineer, are not satisfactory.

6. Failure of the Contractor to adhere to the submitted and accepted blast plan.

B. Blasting operations shall not resume until the Engineer has approved the Contractor's revised blasting plan with modifications correcting the conditions causing the suspension.

3.08 PRE-BLAST/POST-BLAST INSPECTIONS

Pre-blast and post-blast inspections will be performed as specified by the Engineer.

3.09 DAMAGE REPAIR

When blasting operations damage off-site properties or a portion of the work or material surrounding or supporting the work, promptly repair or replace damaged items to the condition that existed prior to the damage, to the satisfaction of the Engineer.

END OF SECTION

(This page is intentionally blank)

SECTION 02491

Rehabilitation of Sanitary Sewer Manholes

PART 1 – GENERAL

1.01 SCOPE

A. This specification covers the work necessary to expose and raise existing sanitary sewer manholes to grade and to rehabilitate or replace existing sanitary sewer manholes. All work shall be performed only as directed by the Engineer or shown on the task order Drawings. The Work includes:

1. Sealing to exclude infiltration; and/or

2. Lining of manhole interiors; and/or

3. Removal and replacement of manholes; and/or

4. Replacement and/or removal of broken manhole covers and frames, corroded step irons or corroded ladders.

B. The Contractor is responsible for field verification of location and condition of all manholes.

C. The Contractor shall provide all labor, materials and equipment required to clean, raise, or rehabilitate the manholes.

D. The Contractor shall comply with the City's and OSHA requirements for confined space entry.

E. No manhole cover slabs shall be removed to undertake the work until prior notice has been given to the Engineer.

F. Before commencing work at existing manholes, a perforated catch bucket (to retain particulate larger than U.S. No. 8 sieve, for subsequent removal), or similar, shall be fitted to the outgoing pipe from the manhole structure. Contractors shall strictly adhere to the requirement that construction debris and waste material be prevented from entering downstream sewers.

G. The Contractor shall keep accurate records of the location of and nature of the rehabilitation work performed at each manhole as directed by the Engineer. The Contractor shall provide copies to the Engineer as required.

1.02 REFERENCE SPECIFICATIONS, CODES, AND STANDARDS

A. The following references are part of this Specification. In case of conflict between the requirements of this Specification and those of the listed documents, the requirements of this Specification shall prevail. The latest edition of the following references shall be used:

1. ASTM C794 — Test Method for Adhesion-in-Peel Elastomeric Joint Sealant

2. ASTM D412 — Test Methods for Vulcanized Rubber and Thermoplastic Rubbers and Thermoplastic Elastomers - Tension

3. ASTM D882 — Test Methods for Tensile Properties of Thin Plastic Sheeting

B. Other ASTM standards as referenced in the Specifications below.

1.03 SUBMITTALS

A. The Contractor shall submit the following information:

1. Written certification by the manhole rehabilitation system manufacturer stating that the applicator is approved to install the rehabilitation system specified. **(At Pre-construction Meeting)**

2. Manhole rehabilitation system manufacturer's literature describing the rehabilitation system components, rehabilitation material utilized, including the materials' physical and chemical characteristics. **(At Pre-construction Meeting)**

3. Experience record of a minimum of sixty (60) manholes rehabilitated within the last three (3) years. **(At Pre-construction Meeting)**

4. Description of installation method including **(At Pre-construction Meeting)**:

   a. Product Material Safety Data Sheets.

   b. Maximum pot life, storage life and essential storage requirements of all rehabilitation materials

   c. Mixing and proportioning requirements (as applicable).

d. Environmental requirements for application and worker safety including ventilation, humidity, and temperature ranges.

e. Application film thickness per coat of activator and mastic (as applicable).

f. Curing time, including specific formulation requirements to provide specified setting time for foamed mastic (as applicable)

g. Wastewater flow control plan in accordance with Section 02750.

B. Methodology, including detail drawing and necessary product data for finishing all anticipated pipe connections to rehabilitated manholes to prevent infiltration and exfiltration (e.g. anticipated pipe connections, including through pipe, side connections and drop connections). In the case of lining, such details shall be provided by the liner manufacturer or approved in writing by the liner manufacturer.

1.04 QUALITY ASSURANCE

A. Materials and supplies provided shall be the standard products of manufacturers. The standard products of manufacturers other than those specified may be accepted if it is demonstrated that they are equal in composition, durability, and usefulness for the purpose intended. All material components of an installed lining system shall be supplied by a single manufacturer.

B. The Engineer will inspect the rehabilitated manholes to evaluate the Contractor's work.

1.05 RELATED SECTIONS

A. The Work of the following Sections apply to the Work of this Section. Other Sections of the Specifications, not referenced below, shall also apply to the extent required for proper performance of the Work.

1. Section 02511: Preconditioning and Cleaning Manholes and Sewers

2. Section 02750: Wastewater Flow Control

3. Section 02200: Earthwork

4. Section 02140: Dewatering

1.06 TRIAL TEST AND METHODOLOGY REVIEW

A. The Contractor shall comply with the following conditions before a manhole rehabilitation technique becomes accepted as a viable option on a repeat basis:

1. A successful demonstration of manhole rehabilitation, for a manhole chosen by the Engineer, shall be carried out including type and quality control tests as recommended by the manufacturer and in compliance with industry standards.

2. The trial shall be performed prior to approval for adoption by the Engineer of the manhole rehabilitation technique to prove that the equipment, materials and installation methodology are fully acceptable to meet local conditions. Payment will be made through the applicable unit price for the work.

3. The Contractor shall allow for any further requirement of the Engineer, subsequent to the trial, to modify the equipment, material and/or installation methodology in order to complete the work satisfactorily and meet all testing standards, including vacuum testing of Rehabilitated Manholes, at no cost to the City.

B. A representative from the manufacturer of the manhole rehabilitation system shall be present on-site for the entire duration of the trial test and methodology review. The manufacturer's representative shall certify in writing that the system applicator and/or installer has performed the application and/or installation in accordance with the manufacturer's requirements and recommendations.

PART 2 – PRODUCTS

2.01 GENERAL

A. The installer shall warrant and hold harmless the City and the Engineer against all claims for patent infringement and any loss thereof.

B. The materials used shall be designed, manufactured and specifically intended for sewer manhole rehabilitation and the specific application in which they are used. The materials shall have a proven history of performance in sewer manhole rehabilitation for a minimum of three (3) years in sewer systems elsewhere nationally, of similar age, groundwater levels and circumstance.

C. The materials shall be delivered to the job site in original unopened packages and clearly labeled with the manufacturer's identification (brand name), date of manufacture, storage life and printed instructions.

D. Stored materials shall be protected from weather and excessive heat or cold, and stored in accordance with the manufacturer's instructions. Flammable materials shall be stored in accordance with state and local codes. Materials exceeding storage life recommended by the manufacturer shall be removed from the site.

E. The Contractor shall dispose of all wastes in accordance with applicable regulations.

F. At the request of the Engineer, the Contractor shall provide a representative employed by the manufacturer having technical training in any of the specific manhole rehabilitation materials and/or system or technique being applied. The appropriate specialist shall be available for consultation on site within 48 hours notice, at no cost to the City.

G. All completed rehabilitation work shall be resistant to:

1. Continuous immersion in septic sewage at temperatures up to 85˚F

2. Continuous exposure to hydrogen sulfide gas from septic sewage at temperatures up to 85˚F

3. Deposits of free sulfur on exposed surfaces

4. Continuous exposure to 10% sulfuric acid at temperatures up to 85˚F

Seals shall be tested to withstand all subsequent infiltration, inflow, and exfiltration as specified herein.

PART 2A – MANHOLE INTERIOR RENEWAL

2A.01 MANHOLE SEALING TO EXCLUDE INFILTRATION

A. General:

1. Manholes will be sealed when active leaks are present, and/or will be patched when there is exposed aggregate (concrete manholes) or brick mortar missing (brick manholes) in small isolated areas.

2. The generic chemical sealing materials to be used are listed with the basic properties, performance standards, and mix ratios that are

known to give acceptable performance.

3. In every case, mixing and handling of chemical sealing material shall be in accordance with the manufacturer's recommendations.

B. Characteristics of Sealing Chemicals:

1. All chemical sealing materials used in the performance of the work specified must have the following characteristics:

a. The chemical sealant must be able to react/perform in the presence of water (groundwater) while being injected, i.e., the sealant must be hydrophilic.

b. The cured material must withstand submergence in water without degradation.

c. The resultant sealant (grout) formation must prevent, on a continuing basis, the passage of water (infiltration) through manhole and sewer pipe joints.

d. The sealant material, after curing, must be flexible as opposed to brittle.

e. The sealant formation should be able to withstand freeze/thaw and wet/dry cycles without adversely affecting sealant properties. Note: This primarily applies to storm sewers, which are shallow and sometimes dry.

f. The sealant formation must not be biodegradable.

g. The cured sealant should be chemically stable and resistant to the mild concentrations of acids, alkalis, and organics found in normal sewage.

h. Packaging of component materials must be compatible with field storage and handling requirements. Packaging must provide for worker safety and minimize spillage during handling.

i. Mixing of the component materials must be compatible with field operations and not require precise measurements of the ingredients by field personnel.

j. Clean up must be done without inordinate use of flammable or hazardous chemicals.

k. Residual sealing materials must be easily removable from the sewer line to prevent reduction or blockage of the sewage flow.

C. Acceptable Chemical Sealing Materials:

1. The following is a generic listing of permissible chemical sealing materials currently in use and the basic requirements, properties and characteristics of each.

a. Acrylamide base gel sealing material:

1) A minimum of 10% acrylamide base material by weight in the total sealant mix. A higher concentration (%) of acrylamide base material may be used to increase strength or offset dilution during injection.

2) The ability to tolerate some dilution and react in moving water during injection

3) A viscosity of approximately 2 centipoise which can be increased with additives

4) A constant viscosity during the reaction period

5) A controllable reaction time from 10 seconds to 1 hour

6) A reaction (curing) which produces a homogeneous, chemically stable, non-biodegradable, firm, flexible gel

7) The ability to increase mix viscosity, density and gel strength by the use of additives

b. Acrylic base gel chemical sealing material:

1) minimum of 10% acrylic base material by volume in the total sealant mix. A higher concentration (%) of acrylic base material may be used to increase strength or offset dilution during injection.

2) The ability to tolerate some dilution and react in moving water during injection

3) A viscosity of approximately 2 centipoise, which can be increased with additives

4) A constant viscosity during the reaction period

5) A controllable reaction time from 5 seconds to 6 hours

6) A reaction (curing) which produces a homogeneous, chemically stable, non-biodegradable, flexible gel

7) The ability to increase mix viscosity, density and gel strength by the use of additives

c. Urethane base gel chemical sealing material:

1) One (1) part urethane prepolymer thoroughly mixed with between 5 and 11 parts of water by weight. The recommended mix ratio is 1 part urethane prepolymer to8 parts of water (11% prepolymer).

2) A liquid prepolymer having a solids content of 77% to 83%, specific gravity of 1.04 (8.65 pounds per gallon), and a flash point of 20°F

3) A liquid prepolymer having a viscosity of 300 to 1000 centipoise at 70°F that can be pumped through 500 feet of 1/2-inch hose with a 1000 psi head at a flow rate of 1 ounce per second

4) The water used to react the prepolymer should have a pH of 5 to 9.

5) Gel times shall be as short as practical and as short as two (2) minutes for polyurethane grouts, in accordance with the manufacturer's recommendations. Control of gel times is a critical aspect of successful chemical grouting. Higher water ratios give longer cure times.

6) A relatively rapid viscosity increase of the prepolymer/water mix in the first minute. (Viscosity increases from about 10 to 60 centipoise in the first minute for 1 to 8 prepolymer/water ratio at 50°F).

7) A reaction (curing) which produces a chemically stable and non-biodegradable, tough, flexible gel.

8) The ability to increase mix viscosity, density, gel strength and resistance to shrinkage by the use of additives to the water

d. Urethane base foam chemical sealing material:

1) Approximately one part of urethane prepolymer with one part of water by weight (50% prepolymer)

2) A liquid prepolymer having a solids content of 82 specific gravity of 1.1 (9.15 pounds per gallon) flash point of 200°F

3) A liquid prepolymer having a viscosity of 30 centipoise at 72°F that can be pumped through 50 feet of 1/2-inch hose with a 500 psi head at a flow rate of one ounce per second

4) A cure time of 15 minutes at 40°F, 8.2 minutes at 60°F 4.6 minutes at 100°F when the prepolymer is reacting with water only

5) A cure time of 5.5 minutes at 40°F, 8.2 minutes at 60°F, 2.6 minutes at 100°F when the prepolymer is reacting with water containing 0.4% accelerator

6) During injection; foaming, expansion, and viscosity increase occur.

7) Physical properties of the cured foam of approximately 14 pounds per cubic foot density, 80 to 90 psi strength, and 700% to 800% elongation when a mixture of prepolymer and 50% water undergoes a confined test and expands five times its initial liquid volume.

8) Acrylamide and acrylic gel grouts maintain a viscosity close to that of water (2 centipoise) during the time between mixing material solution with the activator solution and the formation of a gel. This time period is referred to as the cure time, induction period, or gel time. The low viscosity is advantageous for penetration but makes the grouts susceptible to dilution during the reaction period.

9) Urethane gel grout undergoes a viscosity increase during the time between mixing the base material with

water and the formation of a gel. This time period is cure time or gel time. The increasing viscosity limits penetration by dilution, particularly by groundwater.

2A.02 PATCHING

A. Manhole patching work includes re-pointing, filling, and repairing non-leaking holes, cracks, and spalls in concrete and masonry manhole walls, benches and slabs as well as through-flow channel dressing and repair.

B. The patching material shall consist of a premixed non-shrink cement-based patching material consisting of hydraulic cement, graded silica aggregates, special plasticizing and accelerating agents, which has been formulated for vertical or overhead use. It shall not contain chlorides, gypsums, plasters, iron particles, aluminum powder, or gas forming agents or promote the corrosion of steel it may come into contact with. Set time (ASTM C-191) shall be less than 30 minutes. One hour compressive strength (ASTM C-109) shall be a minimum of 200 psi and the ultimate compressive strengths (ASTM C-882 Modified) shall be a minimum of 1700 psi.

PART 2B – MANHOLE LINING SYSTEMS

2B.01 EPOXY BASED LINING SYSTEM

A. Manholes will be lined with epoxy or epoxy mortar when the manholes are subject to high groundwater levels (manholes near lakes/creeks, etc.) resulting in significantly active infiltration (runners and gushers) and/or subject to corrosive environments.

B. Epoxy lining systems shall be completely watertight and free of any joints or openings other than pipe inlets and the rim opening. The junction of the lining material with the pipe material at the inlets and outlets shall be completely watertight.

C. Each lining application shall be designed for application over damp (but not wet or active running water) surfaces without degradation of the final product and the bond between the product and the manhole surfaces.

D. Generally, the entire interior walls of manholes as designated to be rehabilitated shall be lined with epoxy or epoxy mortar liner, as follows:

1. The epoxy or epoxy mortar liner shall be used to form a monolithic liner covering all interior surfaces of the manhole, including benches and inverts.

2. The finished epoxy based monolithic liner shall conform to the following minimum requirements at 28 days:

PROPERTY	TEST METHOD	RESULTS
Compressive Strength	ASTM C-579	≥ 6,500 psi
Tensile Strength	ASTM C-307	≥ 2,500 psi
Flexural Strength	ASTM C-580	≥ 4,500 psi
Shrinkage	ASTM C-531	< 0.15%
Bond Strength	ASTM D-4541	Concrete failure

3. The finished manhole shall be resistant to corrosive conditions common to municipal wastewater and shall prohibit water infiltration.

4. The epoxy based liner shall be suitable for application over damp or dry concrete surfaces.

E. At a minimum, the manhole rehabilitation epoxy or epoxy mortar liner system (product coating designation) must have received a passing score without receiving an N/E result in any category as documented in the following study:

"EVALUATION OF PROTECTIVE COATINGS FOR CONCRETE"
August, 2002 Update

John A. Redner, Sewerage Departmental Engineer, Randolph P. Hsi, Associate Engineer, Edward J. Esfandi, Senior Engineer, Roger Sydney, Civil Engineer, Robin M. Jones, Associate Engineer, and Donna Won, Senior Engineer

County Sanitation Districts of Los Angeles County, Whittier, California.

F. Acceptable systems include, but are not limited to, the following:

1. Raven 405 (Raven Lining Systems)
2. Mainstay DS-4 (Madewell Products)
3. Magma Quartz or Belzona 4111 (Belzona Inc.)
4. Sauereisen-210 (Sauereisen)
5. Warren Epoxy Spray or Laminate (Warren Environmental)

2B.02 FIBERGLASS LINING SYSTEM

A. Manholes will be lined with a cured-in-place fiberglass insert when the manhole interior is structurally deteriorated (concrete or brick manholes), and/or subject to a corrosive environment.

B. The fiberglass lining system shall consist of a three layer composite, laminate system comprised of one non-permeable synthetic, environmental membrane embedded and bonded between two layers of structural fiberglass woven fabric impregnated with a modified epoxy resin system. The average wall thickness of the fiberglass liner system shall be no less than 0.5-inch unless otherwise allowed, but shall be structurally designed to withstand all structural loads.

C. The finished fiberglass liner shall conform to the following minimum physical properties:

PROPERTY	TEST METHOD	RESULTS
Max. Flexural Fiber Stress	ASTM D-790	≥ 44,000 psi
Flexural Modulus of Elasticity	ASTM D-790	≥ 1,000,000 psi
Compressive Strength	ASTM D-695	≥ 11,000 psi
Compressive Modulus	ASTM D-695	≥ 900,000 psi
Strength at Break	ASTM D-638	≥ 28,000 psi
% Elongation at Break	ASTM D-638	< 9%
% Elongation at Max. Load	ASTM D-638	< 2%

D. Acceptable products are equal to Poly-Triplex PTLS-6800 series manufactured by Poly Triplex Technologies, Inc.

2B.03 CEMENTITIOUS LINING SYSTEM

A. Manholes will be lined with cementitious lining for preventive maintenance when the manhole interior is mildly weathered or aged, and/or subject to minor infiltration (seepers or drippers).

B. Cementitious lining systems shall be completely watertight and free of any joints or openings other than pipe inlets and the rim opening. The junction of the lining material with the pipe material at the inlets and outlets shall be completely watertight.

C. Each lining application shall be designed for application over damp (but not wet or active running water) surfaces without degradation of the final product and the bond between the product and the manhole surfaces.

D. Generally, the entire interior walls of manholes as designated shall be lined with calcium aluminate cementitious liner, as follows:

1. The calcium aluminate cementitious liner shall be used to form a monolithic liner covering all interior surfaces of the manhole, including benches and inverts.

2. The finished cementitious liner shall conform to the following minimum requirements at 28 days:

PROPERTY	TEST METHOD	RESULTS
Compressive Strength	ASTM C-109	≥ 8,000 psi
Tensile Strength	ASTM C-496	≥ 800 psi
Flexural Strength	ASTM C-293	≥ 1,500 psi
Shrinkage (@ 90% R.H.)	ASTM C-490	0%
Bond Strength	ASTM C-882	≥ 2000 psi

3. The finished manhole shall be resistant to corrosive conditions common to municipal wastewater and shall prohibit water infiltration.

E. The cementitious liner mix shall be factory blended requiring only the addition of water at the jobsite. The liner mix shall be suitable for “wet” application by progressive cavity pump type equipment only. Gunite mixes will not be allowed.

F. The liner applicator must use approved equipment designed and/or approved by the material manufacturer specifically for the application of cementitious liners in manholes. Only low-pressure, progressive cavity pump type equipment for “wet” application will be allowed.

G. Acceptable systems are those equal to:

1. Strong-Seal® by The Strong Company, Inc.;
2. Sewpercoat® by Lafarge Calcium Aluminates, Inc.;

PART 2C - MANHOLE RAISING/ADJUSTMENT TO GRADE

2C.01 GENERAL

A. Brick

1. Brick shall conform to ASTM C-32 for grade SM. Bricks shall conform to the following dimensions, unless otherwise approved by the Engineer:

	Depth	Width	Length
	(inches)	(inches)	(inches)

Standard Size	2 ¼	3 ¾	8
Allowable Variation	± ¼	± ¼	± ½

2. All brick shall be new and whole, or uniform standard size and with substantially straight and parallel edges and square corners. Bricks shall be of compact textures, burned hard entirely through, tough and strong, free from injurious cracks and flaws, and shall have a clear ring when struck together. No soft or salmon brick shall be used except at such places, to such extent, and under such conditions as may be approved by the Engineer.

B. Mortar

1. The Contractor shall use mortar meeting the requirements of ASTM C-270 Type S unless directed otherwise by the Engineer.

2. The Contractor shall prepare mortar only in quantities needed for immediate use. Mortar which has been mixed for more than 30 minutes, which has set, or which has been retempered shall not be used.

3. No mortars utilizing latex emulsifiers or plasticizers as a filler are acceptable. No bonding agents are allowed.

C. Cast Iron Adjustment Rings

1. For adjusting lid elevation: Adjusting rings shall be cast iron equal to Series R-1979-H (heavy duty) manufactured by Neenah Foundry.

2. All adjusting rings shall be securely sealed to the casting frame using resilient, flexible, non-hardening, preformed butyl mastic equal to Rub R Nek or EZ Stick. This mastic shall be applied in such a manner that no surface water or ground water inflow can enter the manhole through gaps between the first adjusting ring, between adjusting rings, or between the last adjusting ring and the manhole frame. Up to two (2) inches of adjusting rings may be installed on a given manhole. No more than two (2) adjusting rings in total shall be used for the final adjustment to grade.

D. Concrete Grade Rings

1. For manhole adjustment to grade: Pre-cast concrete grade rings may be used instead of brick and mortar for adjusting pre-cast concrete manholes to grade. The pre-cast concrete rings shall be installed between the top of the cone and the casting frame. Grade

rings shall be pre-cast concrete, as manufactured by Standard Concrete Products (lightweight) or approved equal.

2. All grade rings shall be securely sealed to the bottom of the casting frame and the top of the cone using a resilient, flexible, non-hardening, preformed butyl mastic equal to Rub R Nek or EZ Stick. No less than two beads shall be applied 1/2 inch wide and 3/4 inch high between grade rings when grade rings are stacked. No less than one inch of non-shrink cement based patching material shall be applied to the inside and outside faces of the grade rings when grade rings are stacked.

2C.02 MANHOLE CASTING EMBEDMENT SEALANT TO EXCLUDE RDI/I

A Provide a premium, extruded bituminous tacky rubber sealant in rope form for use on manholes as an embedment material for the frame to adjusting brick/mortar corbel.

B. Sealant shall conform to AASHTO M-198 Type B and SS-S-210 and SS-S-210A.

C. Properties:

1. Chemical Composition:

	SPEC REQUIRED	
Hydrocarbon Plastic Content % by wt	ASTM D4 (mod.)	50-70
Inert Mineral Filler % by wt	SS-S-210A	30-50
Volatile Matter % by wt	ASTM D6	3.0 max

2. Physical Properties:

Specific Gravity, 77°F	ASTM D71	1.20-1.35
Ductility, 77°F	ASTM D 113	5.0 min
Softening Point	ASTM D36	320 min
Flash Point, C. 0. C. min	ASTM D92	600 min
Fire Point, C. 0. C. min.	ASTM D92	625 min
Penetration, 77°F (150 gm) 5 sec.	ASTM D217	50 to 120

3. Chemical Resistance:

30-Day Immersion: No visible deterioration when tested for 30 days in 5% caustic potash, 5% hydrochloric acid, 5% sulfuric acid, or 5% saturated hydrogen sulfide

Elongation Initial, 77°F	300% min
Two Weeks, Total Water Immersion	300% min
Flow Resistance (one inch wide overhead joint exposed to 135°F for 7 days)	No Flow
Storage Life	Indefinite
Application Temperature Range	10 to 125°F
Service Temperature Range	-20 to 200°F

PART 2D – REPLACEMENT MANHOLE FRAMES AND COVERS

2D.01 GENERAL

A. New manhole covers and frames shall conform to the requirements of the City's standard and standard details.

B. Frames and covers shall be Neenah Foundry, Series R-1700 (heavy duty) or equivalent. Light duty covers shall not be used.

C. Where manholes are located in flood plains, frames and covers shall be Neenah Foundry, Series R-1700 (heavy duty) or equivalent. Light duty covers shall not be used. The top surface of the frame and covers shall have bolt down lids with a watertight gasket.

2D.02 ELASTOMERIC CORBEL SEAL TO EXCLUDE RDI/I

A. Provide a frame-to-manhole elastomeric seal consisting of a two component, aliphatic chemical curing, urethane sealant formulated as a high build coating to seal the casting to the manhole corbel. The purpose is to stop infiltration by the application of a corrosion resistant flexible coating to be applied to the inside wall. The corrosion resistant flexible urethane shall be Flex-Seal Utility Sealant as manufactured by Sealing Systems, Inc., Loretto, or approved equal.

B. Minimum Requirements for Flexible Aromatic Urethane Resin Liner Primer:

Hardness	ASTM-D2240	85 Brinell
Elongation	ASTM-D412	400%
Tensile Strength	ASTM-D412	3000 p.s.i.
Adhesive Strength	ASTM-D0903	3 50 lb./in.
Tear Resistance	ASTM-D1004	200 lb./in.

C. Minimum Requirements for Flexible Aromatic Urethane Resin Liner Final Coat:

Hardness	ASTM-D2240	50 Brinell
Elongation	ASTM-D412	750 %
Tensile Strength	ASTM-D412	1100 p.s.i.
Adhesive Strength	ASTM-D0903	175 lb./in.
Tear Resistance	ASTM-DIO04	155 lb./in.

D. Minimum Final Thickness: 80 mils.

PART 2E – REPLACEMENT MANHOLES

2E.01 GENERAL

A. New manholes shall conform to the requirements of Section 02730 and the City's standard details.

PART 3 – EXECUTION

3.01 PERFORMANCE REQUIREMENTS

A. Perform work needed to make manholes structurally sound, improve flow, prevent entrance of inflow or groundwater infiltration, and prevent entrance of soil or debris.

B. Existing manhole shall be Preconditioned and Cleaned in accordance with Specification Section 02511 prior to any and all rehabilitation work.

3.02 PROJECT CONDITIONS

A <u>Manholes Containing Flow Monitoring Equipment</u>:

1. Drawings may not show locations of flow monitoring equipment. If a manhole contains any mechanical hardware or electrical flow monitoring equipment, immediately notify the Engineer.

2. Reschedule work in such manholes until equipment has been removed by the City and further instructions are given, at no additional cost.

3. Do not subject manholes with mechanical hardware or electrical equipment to bypass or diversion pumping.

4. Damage to installed equipment, due to Contractor's failure to adhere to the above, will be repaired by the City and cost of repairs charged to Contractor.

B. <u>Field Location of Manholes</u>:

1. Manholes may be located within project limits, which are not part of the system being rehabilitated. Properly identify manholes before starting work. No payment will be made for work in manholes not indicated on the Drawings or not directed in writing by the Engineer

3.03 SALVAGE

A. Manhole covers and frames, as well as adjusting rings from abandoned, broken or adjusted manhole castings remain the property of the City. Deliver salvaged items to City's storage facility or as otherwise directed by the City at the conclusion of the project.

3.04 PROTECTION

A. Provide barricades and warning lights and signs for excavations created by manhole casting work in accordance with the drawings.

B. Do not allow sand, debris or runoff to enter sewer system.

3.05 EXCAVATION

A. Excavate in accordance with City's Standard Specifications and Section 02200.

B. Perform work in accordance with OSHA standards. Employ a trench safety system, as required for excavations.

C. Install and operate necessary dewatering and surface water control measures as required.

3.06 FLOW BYPASS AND DIVERSION PUMPING

A. Install and operate bypass and diversion pumping equipment to maintain sewage flow and to prevent backup or overflow in accordance with Specification Section 02750 – Wastewater Flow Controls.

3.07 LINERS

A. General. The entire interior walls of manholes as designated on the drawings or instructed by the Engineer to be rehabilitated shall be lined with epoxy/epoxy mortar lining, cementitious lining or fiberglass lining system.

B. All liners shall be installed in accordance with the manufacturer's written instructions.

3.08 EPOXY LINER

A. Storage, mixing, application and curing procedures shall conform to the recommendations of the monolithic epoxy or epoxy mortar liner manufacturer. The epoxy or epoxy mortar may be spray, trowel or brush

applied onto the interior surfaces of the manhole as recommended by the manufacturer.

B. Surfaces shall be made free of oil, grease, water and other contaminants prior to application of the epoxy or epoxy mortar liner. An abrasive blast, high-pressure water blast, or acid etching shall be used to obtain a uniform sound substrate with a neutral pH prior to the application of the epoxy liner.

C. After cleaning and prior to liner installation, all large voids and spalled areas shall be filled and patched with a suitable patching. The patching compound shall conform to the recommendations of the epoxy or epoxy mortar liner manufacturer.

D. The epoxy or epoxy mortar lining system shall be installed to the manufacturer’s recommended thickness and number of coat applications. No sagging of the liner on vertical surfaces shall be acceptable to the Engineer.

E. The epoxy or epoxy mortar liner shall not be installed on surfaces in direct sunlight or when surfaces are subject to rising temperatures to prevent blistering of materials due to thermal expansion of trapped air or moisture in the substrate.

3.09 FIBERGLASS LINING SYSTEM

A. After cleaning and prior to liner installation, all large voids and spalled areas shall be filled and patched with a suitable patching compound. The patching compound shall be as recommended by the lining system manufacturer.

B. The installation of the lining system shall be in strict accordance with the manufacturer's written installation procedures.

C. After the liner system is installed it shall be cut and trimmed. The completed product shall be a permanent, monolithic, lined and impervious structure shaped to the interior of the existing manhole. The manhole shaft lining systems shall be completely water tight and free of any joints or openings other than pipe inlets, pipe outlets and the rim opening.

D. All defective areas and imperfections including, but not limited to, poor adhesion, excessive void, and air bubbles shall be repaired in strict conformance with the recommendation of the lining system manufacturer and subject to the approval of the Engineer.

3.10 CEMENTITIOUS LINER

A. Storage, mixing, application and curing procedures shall conform to the recommendations of the cementitious liner manufacturer. The cementitious liner shall be spray applied using a low-pressure, progressive cavity type pump onto the interior surfaces of the manhole as recommended by the manufacturer. Gunite or "dry" applications will not be allowed.

B. Surfaces shall be made free of oil, grease, water and other contaminants prior to application of the cementitious liner. An abrasive blast, high-pressure water blast, or acid etching shall be used to obtain a uniform sound substrate with a neutral pH prior to the application of the cementitious liner.

C. After cleaning and prior to liner application, loose and protruding brick, mortar, or concrete shall be removed and all large voids and spalled areas shall be filled and patched with a suitable patching compound. The patching compound shall conform to the recommendations of the cementitious liner manufacturer.

D. The cementitious lining system shall be installed to the manufacturer's recommended thickness and number of coat applications up to one-inch (1") thickness, but not less than one-half-inch (1/2") thickness. The finished surface shall then be trowel-finished and/or brush-finished to a relatively smooth finish.

E. The freshly applied liner shall be protected from high-velocity surface drying or air movement.

3.11 MANHOLE BENCHES/THROUGH-FLOW CHANNELS

A. <u>Formation of Through-Flow Channel</u>:

1. Remove obstructions and loose materials from benches prior to shaping the through flow channel. Form a smooth, U-shaped channel having a minimum depth of one pipe diameter and channel it across the floor of the manhole using an approved manhole rehabilitation material as specified in Part 2. Control flow to allow sufficient setting time for material used.

2. Form a smooth transition with a reshaped channel and a raised manhole bench to eliminate sharp edges of pipe and concrete bench. Build up and smooth through flow channel of manhole to match flow line of pipe.

3. Make finished benches and through flow channels smooth and without defects which would allow for accumulation of debris.

B. Remedial Work to Existing Manhole:

1. Exposed reinforcement shall be sand blasted, epoxy primed and protected by a premixed non-shrink cement-based patching material consisting of hydraulic cement, graded silica aggregates, special plasticizing and accelerating agents, which has been formulated for vertical or overhead use. It shall not contain chlorides, gypsums, plasters, iron particles, aluminum powder, or gas forming agents or promote the corrosion of steel it may come into contact with.

C. Connection of Pipelines to Replacement Manholes:

1. In connecting pipelines to replacement manholes, the Contractor shall ensure that the connections are watertight and that the existing sewers and replacement manholes are not damaged.

2. The Contractor shall ensure that there is no interruption to existing flows during the connection works.

3. The Contractor shall adjust replacement manhole benchings and bases to accommodate existing pipelines to ensure a continuous invert without steps.

4. All connections into manholes shall be designed and installed so as to ensure that groundwater is not permitted to enter the confines of the sewer or manhole. The Contractor shall submit proposals together with any material specification for making fully sealed connections into replacement manholes to the Engineer for approval.

3.12 REPLACEMENT MANHOLE FRAMES AND COVERS

A. Adjust all manhole frames and covers above or at grade, reset loose frames, and install elastomeric corbel seal.

B. Where manholes are constructed in paved areas, the frame and cover shall be combined with brick work or cast iron adjustment rings so that the elevation of the top surface of the installed casting cover is flush with the surrounding pavement constructed to the exact slope, crown and grade of the existing adjacent pavement. Manholes in locally low-lying areas, where surface water may collect, may incorporate self-sealing covers or manhole inserts as directed by the Engineer. Inside surface of all manhole cover frames shall incorporate the unique 3-digit manhole number corresponding to the City's GIS identification number. The number shall be stenciled with

1.5-inch high epoxy painted figures on surface prepared to manufacturer's requirements. For example, if the 11-digit manhole number is 23250111401, the number 114 will be stenciled on the inside surface of the frame.

C. Where manholes are constructed in paved areas in flood plains, the frame and covers shall have bolt down lids with a watertight gasket. The frame and cover shall be combined with brick work or cast iron adjustment rings so that the top surface of the installed casting cover is flush with the surrounding pavement constructed to the exact slope, crown and grade of the existing adjacent pavement. Inside surface of all manhole cover frames shall incorporate the unique 3-digit manhole number corresponding to the City's GIS identification number. The number shall be stenciled with 1.5-inch high epoxy painted figures on surface prepared to manufacturers requirements or as directed by the Engineer.

D. Where manholes are constructed in non-pavement areas in flood plains or otherwise, the top surface of the frame and covers shall have bolt down lids with a watertight gasket, as directed by the Engineer. Manhole frame and covers in the wooded or un-maintained areas shall be 30-inches above grade when combined with brick work or cast iron adjustment rings. Manholes in grassed areas maintained as lawns etc., shall be adjusted to be flush with the ground unless otherwise directed. The inside surface of all manhole cover frames shall incorporate the unique 3-digit manhole number corresponding to the City's GIS identification number. The number be shall stenciled with 1.5-inch high epoxy painted figures on surface prepared to manufacturers requirements or as directed by the Engineer.

3.13 MANHOLE RAISING/ADJUSTMENT TO GRADE

A. The Contractor shall utilize maps, surveys, sounding instruments, or information from local residents to determine approximate location of buried manholes. Manholes shall be exposed utilizing hand techniques or by carefully probing with mechanical equipment. Manhole exposure in paved areas shall be accomplished by making a square cut in the surface with sufficient width to allow for the excavation of the material around the manhole to expose it to a depth necessary to facilitate adjustments.

B. <u>Manhole adjustment to grade is defined as raising the manhole cover (lid) elevation to grade by removing the casting frame, building up the manhole chimney to a maximum of 12 inches, then re-installing the frame and cover.</u> The chimney may be built-up using brick and mortar or pre-cast concrete grade rings conforming to the requirements of this Section. Brick and mortar shall be used for manholes constructed of brick. Concrete grade rings shall be used for manholes constructed of concrete. A maximum adjustment of 12 inches will be allowed using brick and mortar or concrete grade rings between the bottom of the casting frame and the

top of the cone section. [Note: The 12-inches maximum is a cumulative limit – any existing brick or concrete in place between the frame and cone shall be included in the measurement of the allowable 12-inches.] Non-shrink mortar shall be applied to create a smooth finish on the interior and exterior prior to backfill. Cast iron adjusting rings may be used for either brick or concrete manholes to raise the cover (lid) at the top of the frame, if necessary for final adjustment. Up to two (2) inches of cast iron adjusting rings may be installed on a given manhole. No more than two (2) adjusting rings in total shall be used.

C. Manhole raising to grade is defined as raising the manhole cover (lid) to grade by removing the casting frame, chimney and cone section, then rebuilding the manhole (with new components) up to grade in accordance with the Contract Drawings. Should any part(s) of the manhole below the cone be deemed incompatible with the new manhole components, then the entire manhole shall be removed and replaced to grade.

3.14 ELASTOMERIC CORBEL SEAL TO EXCLUDE RDI/I

A. The surfaces on which the elastomeric seal is to be installed shall be circular, clean, reasonably smooth and free of any loose material and excessive voids. If the surface is rough or irregular and would not provide an effective seal, it shall be smoothed with an approved microsilica enhanced grout. Any flaw or flaws in the manhole frame such as cracks, pits or protrusions, shall be repaired by filling with concrete or grinding smooth. This type of surface work will need to be done on manholes that have not been lined. Manholes that have been lined should not need any surface work in order to install the seal.

B. Installation of seal shall be as directed by the manufacturer's installation instructions. A manufacturer's representative will train the Contractor in the proper method of installing the seal and will assist the Contractor with any problems they might encounter installing the seals.

C. Frame to manhole seals shall be installed in such a manner that will prevent water migration between the manhole frame and manhole structure.

D. The lower 3 inches on the casting frame and top 3 inches of the corbel must be prepared according to the manufacturer's instructions. The corbel/casting interface area shall receive a thickened flexible urethane to achieve a thickness of 80 mils to 120 mils. The seal shall be applied by spray, brush, or trowel 3 inches above the bottom of the frame, and shall cover the entire area to 3 inches below the lowest of bottom of the frame or lowest adjusting ring.

3.15 INSPECTION AND TESTING OF COMPLETED MANHOLE

A. After manhole sealing or manhole lining has been completed, the surface of the installed liner shall be cleaned and prepared to permit visual inspection. Visually inspect the manhole in the presence of the Engineer. Check for cleanliness and for elimination of active leaks.

B. Assist Engineer in verifying installation of lining thickness and sounding. Test points on the manhole wall where directed by the Engineer. Repair verification points prior to final acceptance of payment. The finished surface shall be free of blisters, "runs" or "sags" or other indications of uneven lining thickness. No evidence of visible leaks shall be acceptable. All costs for verification and testing shall be included in the unit price for manhole rehabilitation.

C. In addition, at the City's request, the Contractor may be required within one year to visually inspect the manholes that were sealed or lined. Any work that has become defective within the one-year period shall be redone by the Contractor at no additional expense to the City.

D. Vacuum testing is required for all manholes lined. This test must meet all requirements of Section 02730. The Engineer must be present during the test. All costs for vacuum testing shall be included in the unit price for manhole rehabilitation.

3.16 REPLACEMENT OF EXISTING MANHOLE

A. The Contractor shall replace manholes where shown on the Drawings, or as directed by the Engineer. The Contractor shall dispose of all materials from the removed manholes to a licensed landfill.

3.17 VACUUM TESTING

A. Rehabilitated and/or replaced pipelines and manholes shall be vacuum tested and/or low air pressure tested to detect possible points of infiltration in accordance with Section 02730. All inlets to the system shall be effectively closed and any residual flow shall be deemed to be infiltration. The attached form shall be used to document the test results.

B. The Contractor shall include the cost of the vacuum test in the unit prices for rehabilitation or replacement for the purposes of carrying out the vacuum/low-pressure air test and all the foregoing requirements of this paragraph.

PART 4 – WARRANTY

4.01 MATERIAL WARRANTY

A. A written guarantee of 5 years submitted to the City for the specific project shall be provided by the Manufacturers of the manhole rehabilitation materials.

.

4.02 WORKMANSHIP WARRANTY

A. A written guarantee of 2 years minimum shall be provided by the Contractor against any shortcoming in Workmanship.

(This page is intentionally blank)

ATTACHMENT A

MANHOLE LEAKAGE TEST RESULTS

VACUUM-AIR METHOD

(This page is intentionally blank)

MANHOLE LEAKAGE TEST RESULTS

VACUUM-AIR METHOD

Work Order Number: _____ Date:_____

Project Description: _____

Contractor:_____*Manhole Diameter:_____

Specific Location of Test:_____

Manhole Depth 'A' From Flowline to Top of Cone(feet):_____

Initial Vacuum Gauge Reading:_____ **Must Be 10-inch Hg**

Time Test Must Be Conducted:_____ **In Seconds**

MINIMUM TEST TIMES FOR VARIOUS MANHOLE DIAMETERS AND DEPTHS			
Depth 'A' (feet)	**Minimum Test Times with a 4 ft. Diameter**	**Minimum Test Times with a 5 ft. Diameter**	**Minimum Test Times with a 6 ft. Diameter**
8	20	28	33
10	25	33	41
12	30	39	49
14	35	48	57
16	40	52	67
18	45	59	73
20	50	65	81
22	55	72	89
24	59	78	97
26	64	85	105
28	69	91	113
30	74	98	121

Final Vacuum Gauge Reading: _____ **Inches of Hg**

Is Final Vacuum Gauge Reading greater than or equal to 9" of Hg? **YES** or **NO**

Mark One:
If YES is marked above, the test has PASSED
If NO is marked above, the test has FAILED

Inspector's Signature: _____

A. Per Manufacturer of Vacuum Test Unit. For a 60-inch Manhole Over 30 ft. deep, add 6.5 seconds for each 2-feet over 24-feet. depth to a base time of 78 seconds. Therefore, [((Depth – 24)/2) x 6.5] + 78 = Test Time In Seconds.

END OF SECTION

(This page is intentionally blank)

SECTION 02511

Preconditioning and Cleaning Manholes and Sewers

PART 1 – GENERAL

1.01 SCOPE

A. The objective of preconditioning and cleaning is to maximize sewer and manhole service efficiency and effectiveness. Preconditioning and cleaning involves removal of silt, which is defined as any and all solid or semi-solid materials, including fine and granular material, such as sand, grit, gravel, and rock as well as debris, grease, oil, sludge, slime, or any other loose material or encrustation lodged in the manhole or sewer. Preconditioning and cleaning also involves removal of invading roots, corroded concrete, corroded manhole rungs, corroded ladders, intruding laterals and any other extraneous debris. Two levels of performance concerning preconditioning and cleaning of manholes and sewers shall be adhered to in this contract, as directed:

1. Preconditioning and cleaning as a general level of service; this requires that manholes and sewers shall be considered preconditioned and cleaned if:

   a. Silt is removed and disposed of to a nominal depth of not more than 10% of the through flow channel in manholes, or sewer between manholes, where the through flow channel or sewer has an equivalent diameter up to and including 24-inches.

   b. Silt is removed and disposed of to a nominal depth of not more than 5% of the through flow channel in manholes or sewer between manholes, where the through flow channel or sewer has an equivalent diameter greater than 24-inches.

   c. No surface or appurtenance in manholes including walls, cones, slabs (both intermediate and roof slabs), rungs and benches and drop shafts shall have any remnant of silt, coating, loose bricks, unsound concrete or mortar or loose material.

   d. All roots, corroded concrete, corroded rungs, corroded ladders and intruding laterals are treated or reduced and cut flush with the interior surface of manholes and sewers, removed and disposed of.

Fulfillment of these requirements (e.g., depth of silt or cleanliness of surface) is to be determined by internal manhole and sewer condition survey or inspection of each manhole and sewer length preconditioned or cleaned as directed.

2. Preconditioning and cleaning prior to rehabilitation and repair; which requires that manholes and sewers shall be considered preconditioned and cleaned if, in addition to the requirements of Section 1.01.A.1 above, all silt has been removed from a minimum of 95% of the through flow channel and sewer cross section. In the case of manholes, all surfaces shall be free of cleaning agents and their reactant products. Fulfillment of these requirements is to be established by internal manhole and sewer condition survey or inspection of each manhole and sewer length preconditioned or cleansed as directed.

B. The Contractor shall precondition and clean the manholes and sewers selected by the Engineer or specified herein so as to remove all silt, debris, roots, corroded concrete, corroded rungs and ladders, intruding laterals, etc., and dispose of the material at an approved site.

C. During preconditioning and cleaning work and all other associated Contractor operations, sewer services shall be maintained at all times. This requirement may be relaxed only with the written approval of the Engineer.

D. The manholes and sewers to be preconditioned and cleaned convey sanitary sewage or combined sewage. In many instances such sewers are subject to high flows, either continuously or in a periodically varying cycle, due to rainfall, infiltration, and/or pumping operations. The Contractor shall include in his bid provisions for dealing with such variations, and where necessary, schedule his Work to accommodate such variation in flows.

1.02 RELATED SECTIONS

A. The Work of the following Sections apply to the Work of this Section. Other Sections of the Specifications, not referenced below, shall also apply to the extent required for proper performance of Work.

1. Section 02752: Internal Sewer Condition Assessment.

1.03 REGULATORY REQUIREMENTS

A. The Work of this Section shall comply with the current versions, with revisions, of the following: OSHA 29 CFR 1910.146 (permit-required confined-space regulations)

B. All work and testing shall comply with the applicable Federal codes, including Federal Occupational Safety and Health Act of 1970 and the Construction Safety Act of 1969, as amended, and applicable state and local codes and standards; and to the extent applicable with the requirements of the Underwriter's Laboratories, Inc. and the National Electric Code.

1.04 EXPERIENCED WORKERS

A. All crew chief(s) responsible for preconditioning and cleaning work shall have a minimum of 3 years previous experience in preconditioning, cleaning and related activities including:

1. Use of gas safety monitors/detectors/testers
2. Safe working in confined spaces
3. Utilization of hydraulic pressure jetting/water blasting in sewers and confined spaces
4. Utilization of root cutters and/or root treatment using chemicals
5. Utilization of a wide range of cleaning nozzles in widely differing conditions

B. The Contractor shall provide the Engineer with written documentation that all workers on site meet these experience requirements. This documentation shall include a list of projects on which each individual worked and client name and telephone number for each reference.

PART 2 – PRODUCTS – NOT USED

PART 3 – EXECUTION OF THE WORK

3.01 GENERAL

A. Preconditioning and cleaning works shall be carried out from the downstream access manhole or chamber to the upstream access manhole or chamber and shall entirely comply with the performance requirements defined in the relevant sub-clause of clause 1.01 above.

3.02 WORKING AREA

A. The working area in which machinery and equipment operates is to be kept to a minimum. Equipment not in use shall be removed from the work site so as to minimize disruption to traffic and the general public.

B. The working area is to be free from silt and debris when the Contractor leaves the site at the end of each visit.

C. Open manholes, machinery and standing equipment shall be protected at all times.

3.03 LOCATION

A. The locations of sewers included in the Work are indicated in the Drawings.

3.04 TRAFFIC CONTROL

A. Refer to Specification Section 01500: Temporary Control of Construction Operations for requirements.

3.05 NOISE CONTROL

A. All work activities for preconditioning and cleaning sewers and manholes shall comply with the requirements of SC-11.6. The Contractor shall employ the “best practicable means” to minimize and mitigate noise as well as vibration resulting from operations. Mitigation measures shall include the utilization of sound suppression devices on all equipment and machinery particularly in residential areas and in the near vicinity of hospitals and schools, especially at night.

3.06 FENCING

A. All unattended open manholes and working areas shall be provided with temporary fencing and/or barriers meeting applicable Federal, State, and City of Atlanta standards and subject to the approval of the Engineer.

3.07 WORKING HOURS

A. Work hours are per the General Conditions of the Contract Agreement. No work shall be carried out at any other time including Saturday, Sunday and holidays without permission in writing from the Engineer except when the work is unavoidable or necessary for the saving of life or protection of property. In such case the Contractor shall immediately notify the Engineer.

B. Work on principal highways and major roads shall be restricted to certain hours as directed by the Engineer and/or specified herein. The Contractor will be compensated through the appropriate Task Allowance for additional costs incurred when work hours are restricted.

3.08 SCHEDULING OF WORK

A. After discussion with the Engineer, the Contractor shall prepare and submit a schedule of work that will meet the requirements of the City and the limitations imposed under the Contract Documents. The Contractor shall follow the approved schedule as specified in the General Conditions of the Contract.

3.09 PROLONGED ABSENCE FROM SITE

A. If the Contractor will be absent from the work site, or part of the work site, for a prolonged period, he shall inform the Engineer, replace manhole covers, and clear any roadways of his equipment and materials, including temporary traffic control measures he may be using.

3.10 OPERATIONAL REQUIREMENTS

A. Each preconditioning and cleaning unit and each CCTV/sonar unit shall carry sufficient numbers of guides and rollers such that, when cleaning and inspecting or surveying, all bonds (e.g. metal winch cable) are supported away from sewer and manhole structures.

B. Each preconditioning and cleaning unit shall carry a range of flow control equipment, as opposed to bypass pumping equipment, for use in controlling the flow during the work. A minimum of one item of each size of equipment ranging from 4-inch to 24-inch diameter inclusive shall be carried.

C. The system of silt and debris removal shall be capable of operating in such a way as to minimize the obstruction to sewer flows and preconditioning and cleaning operations.

D. Basements, homes and all other vulnerable property shall be prevented from being flooded where hydraulic preconditioning and cleaning methods are used to precondition and clean manholes and sewers.

E. The Contractor shall make his own arrangements for the secure “off road” overnight parking of his vehicles and cleaning equipment and shall comply with all relevant statutory traffic regulations and local laws.

3.11 HANDLING AND DISPOSAL OF REMOVED MATERIAL

A. The Contractor shall remove all silt, debris, detritus, etc. resulting from all manhole and sewer preconditioning and cleaning activities at least once each working day. Such material shall be caught and collected in a suitable trap, weir, or dam within the manhole or chamber being preconditioned and

cleaned and/or at the downstream manhole of the sewer segment being preconditioned and cleaned. The Contractor shall ensure that the capture method or methods used effectively prevent silt migration downstream. Descriptions of such methods, including details of the equipment used, shall be provided to the Engineer on request.

B. All material removed from sewers and manholes shall be deposited in suitable closed watertight containers such that the total amount removed can be easily measured if required. The Contractor is to give the Engineer such assistance as may be necessary in carrying out this measurement work.

C. The type and capacity of containers to be employed for the holding and transport of the removed materials shall be determined by the Contractor. The Contractor shall not accumulate or store debris, silt, and/or liquid waste or sludge on site. Under no circumstances shall sewage, silt or solids be dumped onto the ground surface, ditches, catch basins or storm drains.

D. The Contractor's work procedures shall be such that sewer preconditioning and cleaning work is not delayed by a lack of an empty container in which to deposit the materials removed from the sewer.

E. The Contractor is advised that it may not always be possible for the container to be positioned immediately adjacent to the manhole from which materials are being removed and that "double handling" of the materials may be necessary. The Contractor shall provide for such "double handling" to be carried out safely and efficiently at no additional cost to the City.

F. The Contractor must make his own arrangements for the proper disposal of materials removed from the sewer. The disposal site must be licensed to accept such materials and must be approved by the Engineer prior to commencement of the work. The Contractor shall be responsible for obtaining all necessary disposal permits and for complying with all state and City regulations for handling silt laden sewage.

G. All costs associated with disposal permitting and silt handling must be included in the Contractor's rates for work.

H. The containers for the disposal of materials removed from sewers and manholes shall be routed through an approved weigh station and a copy of each weight ticket submitted to the Engineer. Such tickets shall be used to determine the quantities of materials removed.

3.12 WATER SUPPLY

A. Prior to the commencement of work, the Contractor shall locate all hydrants from which water may be obtained.

B. The Contractor is responsible for making his own arrangements for obtaining water for the work, and he shall comply with all local conditions regarding the use of construction and flushing water. Such arrangements shall be approved by the Engineer prior to commencement of work.

C. All details of the point of water connection, backflow protection, conveyance methods, draw-off rates, times and all local conditions regarding the use of water shall be approved by the Engineer prior to commencement of work. All equipment, labor, and material required for obtaining water for the work shall be provided by the Contractor.

D. The Contractor shall provide constant attendance when water is being drawn off any hydrant.

E. The Contractor must ensure that a 12-inch minimum air gap is maintained at the supply point on desilting/cleaning/jetting equipment or any other receiving apparatus.

F. The use of any standpipe or hydrant, which has not been approved by the Engineer, is expressly forbidden.

3.13 TRAVEL

A. The cost of all travel required in the completion of the specified work shall be included in the Contractor's rates for work.

B. The cost of travel required for the completion of extra work for which unit costs are not included in the Contract shall be at rates documented in writing by the Contractor.

3.14 SUPERVISION

A. A responsible representative of the Contractor shall be present on the site of the work, or other location approved by the Engineer, to provide supervision of the work. At all times, and especially when a change of work location is underway, the Contractor's representative shall keep the Engineer continuously aware of the location, progress, planned execution of the work, and problems encountered.

3.15 COMMUNICATION

A. The Contractor's on-site representative directly responsible for the work shall be immediately reachable at any time during the normal working day and shall immediately respond to all questions and directions by the Engineer.

B. Adequate means of communication by telephone, portable radio, or other electronic means of communication must be maintained at all times as part of the routine work methodology and in case of an emergency, between all points of activity along the length of the sewer being preconditioned and cleaned.

3.16 DAMAGE TO MANHOLES OR SEWERS CAUSED BY CONTRACTOR

A. The Contractor shall use special care in his work methods and take all necessary precautions against improper use of the preconditioning and cleaning equipment to avoid damaging the sewer and/or manholes being preconditioned and cleaned. If in the Engineer's opinion, the Contractor's work has caused damage to the manhole or sewer, the Contractor shall repair the damage to the complete satisfaction of the Engineer at no additional cost to the City.

3.17 RESPONSIBILITY FOR OVERFLOWS OR SPILLS

A. It shall be the responsibility of the Contractor to schedule and perform his Work in a manner that does not cause or contribute to incidence of overflows or spills of sewage from the sewer system.

B. In the event that the Contractor Work activities contribute to overflows or spills, the Contractor shall immediately take appropriate action to contain and stop the overflow, clean up the spillage, disinfect the area affected by the spill, and notify the designated Engineer in a timely manner, all in accordance with the City's Emergency Response Plan.

C. Contractor will indemnify and hold harmless the City for any fines or third-party claims for personal or property damage arising out of a spill or overflow that is fully or partially the responsibility of the Contractor, including the legal, engineering and administrative expenses of the City in defending such fines and claims

PART 4A – GENERAL TECHNICAL EQUIPMENT SPECIFICATION - SEWERS

4A.01 GENERAL

A. The Contractor shall certify that sufficient cleaning units can be provided, including standby units in the event of breakdown, in order to complete the work within the contract period. Further, the Contractor shall certify that standby or back-up equipment can be delivered to the site within 48 hours in the event of equipment breakdown.

B. The cleaning unit(s) shall be capable of operating routinely, up to a minimum of 500-feet from the point of access to the sewer.

C. Each cleaning unit shall carry a mobile telephone to facilitate communication with the Engineer and to comply with relevant safety requirements defined in the safe working procedures approved by the Engineer for the execution of the work.

4A.02 CCTV AND SONAR INSPECTION/SURVEY UNITS

A. All CCTV and sonar survey units shall comply with Specification Section 02752 unless otherwise determined.

4A.03 WINCHING EQUIPMENT

A. Winching equipment shall be sufficient for the purposes of attaining the degree of cleanliness specified in Section 1.01A

B. The Contractor shall provide conventional power winching equipment and all associated equipment, including winching buckets, balls, breakers, kites, scooters, scrapers, tires, tools and safety apparatus. Complete details of equipment proposed for use in preconditioning and cleaning shall be provided to the Engineer before work commences.

C. Dredging of sewers shall be undertaken by passing various sized buckets, balls, breakers, kites, scooters, scrapers, tires etc, through the sewers to physically remove accumulated silt, sludge and other debris. Where conditions dictate, power boring equipment and/or winching equipment shall be used to loosen the silt prior to its removal. All necessary equipment including cables, lines, and tools must be available at all times as required.

D. The equipment shall be capable of operating efficiently and effectively in the sizes of sewers and depth included in the project at distances of up to 500-feet between adjacent manholes.

E. The project sewers convey sanitary sewage, storm water, or combined sewage flows. Certain Sections of sewer may be flowing entirely full or in a surcharged condition and the Contractor must be prepared at all times to use manual pushing rods, mechanical boring equipment or other methods to pass a leading line through the sewer prior to commencing dredging operations with winching.

F. Any item of CONTRACTOR plant or equipment associated with the Work, which may cause obstruction to the flow in the sewer, shall be removed from the sewer at the close of work each day. It shall be permitted to leave a line or winching cable through the sewer during breaks in the work.

G. Dredging operations in a particular Section of sewer will generally proceed in a downstream direction, working between consecutive manholes using winch buckets of sizes stated below.

H. The size of winch bucket used in sewers up to 48” shall be 90% of the sewer bore up to a maximum of 24”. It is anticipated that buckets of smaller sizes than those stated will need to be winched through Sections of sewer prior to the use of the maximum sizes. The maximum size bucket as stated may be varied at the discretion of the Engineer. However, no buckets larger than these maximum sizes specified shall be used without the approval of the Engineer.

I. The Contractor is advised that use of the maximum size buckets listed above may not be practical due to restricted access through manhole covers and other access points. The Contractor shall ensure that his working procedures will not be unduly affected by such restrictions and shall allow for inefficiencies due to all such restrictions in his unit rates.

J. The winches used to draw buckets, balls, breakers, scooters, scrapers, or tires shall be power driven. They shall incorporate a torque-limiting device to prevent the breaking of winching lines in case the line becomes jammed by obstructions.

K. Where the operational cleaning equipment is towed by winch and bond through the sewer, all winches shall be stable with either lockable or ratcheted drums. All bonds shall be steel or of an equally non-elastic material to ensure the smooth and steady progress of the equipment. All winches shall be inherently stable under loaded conditions.

4A.04 PRESSURE JETTING EQUIPMENT

A. Pressure jetting equipment used shall be sufficient for the purposes of attaining the degree of cleanliness in sewers and manholes as specified in Section 1.01.

B. Jetting units in sewers must be capable of jetting a minimum distance of 500-feet either upstream or downstream from a manhole. Minimum nominal hose size shall be one-inch diameter.

C. The Contractor's unit prices specified in the bid form shall include jetting in sewers both upstream and downstream.

D. Successive passes using constantly moving pressure jetting techniques shall be applied to sewers until they are cleaned to the level specified. Nozzle hold-time (stationary time), for any particular location, shall not be more than 60 seconds in order to forestall damage to the pipe being cleaned. Nozzles shall have jet angles of between 30º to 45º. "High efficiency nozzles" (discharging "pencil jets") with jet angles higher than this figure shall not be allowed to be stationary at any time.

E. Silt shall be collected at manholes as specified herein. No silt shall be allowed to pass beyond the Section of sewer being cleaned.

F. Pass rates (rewind speed) for the jetting head shall be at a consistent speed without jerking and excessive variations. Typical pass rates shall be 4 inches to 8 inches per second. The hose reel shall be power driven in the rewind direction.

G. Manual pressure jetting within manholes shall not be allowed. Progress towards the desired level of service specified in manholes may be monitored by a stem linked TV camera. Manhole pressure jetting for the purpose of cleaning or preconditioning shall be executed either:

1. Manually from the ground surface, or

2. Robotically within the manhole

H. The Engineer shall be notified of the jetting equipment proposed by the Contractor in the bid documents. The jetting equipment will be operated utilizing the pressures specified unless otherwise noted elsewhere in the document. The proposed equipment shall be categorized from the following table:

TABLE 4.4.1

CATEGORY	MACHINE TYPE	CAPACITY (GALL/MINUTE) min max	PRESSURE (p.s.i.) min max
Manholes			
1	High pressure/low volume – trailers	1 – 35	3,000 – 10,000
2	**High pressure/low volume – mini**	9 – 35	3,000– 10,000
3	High pressure/low volume – non HGV/HGV jetter/combination	9 – 35	3,000 – 5,000
Sewers			
4	Low pressure/high volume – HGV	30 – 50	1,500 – 2,000
5	Low pressure/high volume – combination	30 – 75	1,500 – 3,000
6	Low pressure/high volume – super combination	75 – 175	2,000 – 2,500
7	Low pressure/high volume – separate jumbo jetter/suction units	75 – 200	2,000 – 2,500
Other			

Notes for Table 4.4.1

1. The categories listed are typical only of the equipment for use in the present contract. Exceptions to the duty and equipment shown above will be allowed subject to appropriate notification and approval. The Contractor is required to complete the table with details of any other equipment proposed.

2. Discretion shall be used concerning the maximum pressure used for cleaning sewers. In general for asbestos cement, clay and concrete pipes cleaning pressures shall be limited to 5000 psi (340 bar). For brick sewers cleaning pressures shall be limited to 3500 psi (240 bar) For pitch fiber and plastic pipes cleaning pressures will be limited to 1500 psi (102 bar) and 2500 psi (170 bar) respectively.

3. Cleaning pressures in concrete manholes shall be limited to 5000 psi (340 bar). Cleaning pressures in new brickwork manholes shall be limited to 5000 psi (340 bar) and in old brickwork manholes to 3500 psi (240 bar).

4. Higher pre-conditioning pressures in sewers and manholes prior to rehabilitation may be allowed at the sole discretion of the Engineer. The Engineer's agreement to use higher pressures shall not relieve the Contractor of his responsibilities for any resultant damage in accordance with the requirements of paragraph 3.16 above.

I. Where a jetter is fitted with an airflow suction unit for removal of silt and other material from the sewer, it shall be capable of removing materials such as sludge, silt and bricks from depths up to 32-feet with minimum suction of 2500-cfm. A tank with a minimum capacity of 175-cf shall be provided and be capable of decanting collected liquids and conveying them back to the sewer. The suction hose of such a system shall have a minimum internal diameter of 6-inches.

J. Jetting equipment shall be calibrated on an annual basis by an approved body and calibration certificates made available for inspection by the Engineer as requested. Such equipment shall be maintained on a regular basis in accordance with the manufacturer's Specification. The Contractor shall make available copies of his maintenance certificates and/or schedules to the Engineer as requested.

K. An automatic pressure relief valve shall be incorporated on the pump discharge chamber to prevent the pressure exceeding the safe maximum for the system as a whole. This may take the form of a pressure relief valve of the bursting disc type in holder or an automatic pressure regulating valve (unloading valve).

NOTE: The maximum working pressure is the lowest value of the maximum working pressure ratings of all individual components of the system.

4A.05 AIR DRIVEN, ELECTRO-MECHANICAL AND/OR MECHANICAL PRE-CONDITIONING AND CLEANING TOOLS

A. Where necessary, and additional to winching and pressure cleaning equipment, appropriate air driven, electrically driven and/or mechanical tools may be used to needle, hammer, scrape or grind off corroded concrete, scarify and remove compacted silt, chip-off spilt grout, detach encrustation, trim and cut laterals and roots, etc. The Contractor shall provide prior notification to the Engineer prior to the use of such equipment and techniques.

4A.06 VENTILATION OF CONFINED SPACES

A. The Contractor shall provide, operate, maintain and subsequently remove on completion, adequate ventilation apparatus in the form of blowers

and/or fans. The ventilation apparatus shall introduce a fresh air supply to support a safe environment for work in sewers, manholes and all other confined spaces, which shall be kept free from dangerous, toxic and/or explosive gases, whether generated from sewage, soil strata or other source.

PART 4B – GENERAL TECHNICAL EQUIPMENT SPECIFICATION - MANHOLES

4B.01 PRECONDITIONING AND CLEANING AS A GENERAL LEVEL OF SERVICE

A. With the exception of the “through flow” channel, all surfaces shall be thoroughly cleaned using high pressure water with sufficient pressure (minimum force of 3500 psi.(240 bar)) to achieve the specified level of preparation. Preconditioning and cleaning shall include the removal of all roots, corroded concrete, corroded rungs, intruding laterals and any other extraneous, loose material, debris or foreign matter using air driven, electrically driven or mechanical equipment as specified.

B. Before preconditioning and cleaning work commences, silt, sand and debris traps shall be installed at the entrance to the downstream sewer to capture all silt and debris material.

4B.02 PRECONDITIONING AND CLEANING PRIOR TO REHABILITATION AND REPAIR

A. All concrete and masonry surfaces to be rehabilitated or repaired shall be meticulously cleaned by water blasting utilizing a 210°F steam unit and appropriate nozzles to provide a contamination-free and sound surface. Other methods, such as wet or dry sand blasting, acid wash, concrete cleansers, degreasers or mechanical means, may be required to completely clean the manhole surface prior to rehabilitation or repair.

B. All surfaces on which preconditioning and cleaning methods outlined in Paragraph 4B.02.A above have been used shall be thoroughly rinsed, scrubbed, and neutralized to remove cleaning agents and their reactant products before rehabilitation commences. Concrete surfaces shall be accepted for the purpose of rehabilitation when they are sound, surface dry, porous and free from dust, dirt, oil, grease, fat efflorescence, concrete hardening or sealing chemicals, previous coatings, rust, form-release agents, laitance, other penetrating contaminants, fins, surface projections, thin crusts, bridging voids, and loosely adhering concrete and dirt particles.

C. All manhole “runner” and “gusher” infiltration leaks shall be sealed in areas where linings are to be installed. The Contractor will not be allowed to commence rehabilitation work until these leaks have been sealed to the satisfaction of the Engineer.

D. Where required by the relevant manhole rehabilitation system, manhole surfaces to be rehabilitated shall have a pH of 7 to 10. Surfaces shall be tested in accordance with ASTM D4262.

E. Where instructed by the Engineer, the Contractor shall test prepared surfaces by Swiss impact hammer or other physical method to determine soundness.

PART 5 – QUALITY CONTROL/PRECONDITIONING AND CLEANING REPORT

5.01 GENERAL

A. A quality control video inspection of preconditioned and cleaned sewers shall be carried out as directed, immediately following completion of preconditioning and cleaning work. If a sewer or pipe line has not been preconditioned or cleaned as specified (by visual inspection, video review or field analysis) in the sole opinion of the Engineer, the sewer shall be re-preconditioned and cleaned in accordance with the Specification at no additional cost to the City.

B. The Contractor shall supply one copy of inspection video for each reach of sewer completed.

C. When required by the Engineer, the Contractor shall supply one copy of the full internal sewer condition assessment report, completed in accordance with the requirements of Specification Section 02752. This Specification includes a sample report sheet also reproduced at the end of this Specification. The sample report sheet shall be accurately and fully adopted in format and in detail and submitted by the Contractor immediately following the QA/QC inspection.

5.02 DAILY LOG

A. The Contractor shall provide a report of work completed each day. The report shall be submitted to the Engineer no later than one workday following completion of the work. The report shall contain a separate sheet for each manhole and sewer reach preconditioned. The report shall utilize the form provided at the end of this Specification.

B. The Contractor shall immediately notify the Engineer of any material such as bricks, concrete or broken clay pipe appearing in the materials removed from the sewers and/or manholes during preconditioning and cleaning activities.

(EXAMPLE)
CONFINED ENTRY LOG
MANHOLE/ SEWER SAFETY CHECK
(TO BE COMPLETED DAILY)

Date:_____ Supervisor: _____ Vehicle No._____

Time	Manhole No.	Manhole Location
1.		
2.		
3.		
4.		
5.		

Workers on site: _____
(Underline those with safety training certification)

Safety Apparatus on Site: (tick)

Multi Gas Monitor ☐ Lifting Harness ☐ Lifeline ☐

Helmet/ Safety Boots ☐ First Aid Kit ☐ Torch Light ☐

Aluminum Ladder (AL) ☐ Air Blower ☐ Breathing Apparatus ☐

Headphone ☐ Cell Phone ☐

Safety Check: (tick)

Manhole Vented by Blower? ☐ Manhole Tested for Gases? ☐

Oxygen Sufficiency OK? ☐ Protective Clothing Worn? ☐

Top Men Carrying BA? ☐ Ladder Used ☐

Traffic Signs and Cones OK? ☐ Blinkers and Beacons OK? ☐ Site Plans? ☐

Gas Monitoring Readings

Time	**Hydrogen Sulfide Level**		**Oxygen Level %**	**Carbon Monoxide Level**		**Methane Level**	
	Detected (PPM)	Not Detected		Detected (PPM)	Not Detected	Detected (PPM)	Not Detected

Manhole/ Sewer Safe to Enter? ☐ Yes ☐ No Incidents, if any:_____
(Append Lengthy Description)
Signature of Safety Officer/ Supervisor:_____ Date:_____

PRECONDITIONING & CLEANING REPORT SHEET FORM 'A'
(TO BE COMPLETED DAILY)

Date_____ **Sheet____ of _____**
Crew_____ Time of Arrival_____
Site_____ Time of Departure_____

Location (Street No., Easement Site)	**U/S Manhole (Ref)**	**D/S Manhole (Ref)**	**Sewer Length (feet)**	**Unit in Highway (Yes/No)**	**Sewer Material**	**Silt Depths @Manholes (inches)**	Sewer Size **(inches)**	**Length Cleaned (feet)**	**Upstream/ Downstream (U/S-D/S)**	**Comments**

Typical Comments (Initial)	Emergency **(**EM**)**	Urgent Repair **(*UR*)**	Bad Joints **(BJ**)	Excessive Silt/Grease **(DES/DEG**)	Intense Odor **(O)**	Concrete Debris **(DECO)**	Roots (Size) **(R)**	High Levels **(HWL)**	Clayware Debris **(DEC)**	Number of Intruding Laterals (Size) **(CNI)**

Note: Continue on next line where extensive comments or space is required

Signed_____ Signed_____
(Engineers Representative) (Contractors Representative)

END OF SECTION

(This page is intentionally blank)

SECTION 02520

Cured-In-Place Pipe Liner (CIPP)

PART 1 – GENERAL

1.01 SCOPE

A. The Work of this Section includes providing and installation of a cured-in-place pipe (CIPP) liner to stabilize structural defects and constructional inadequacies in circular sanitary sewer pipelines equal to or less than 24-inch diameter. All work shall be performed only as directed by the Engineer or as shown on the task order Drawings. The liner shall be smooth, hard, strong, and chemically inert. Additionally, the interior surface shall closely follow the contours of the host pipe and be tight fitting.

B. The scope of work requires the Contractor to provide all materials, labor, equipment, and services necessary for: bypass pumping and/or diversion of sewage flows; rehabilitation of existing sanitary sewers by lining the existing pipe; construction of internal or external point repair of sewer where necessary, prior to lining; maintaining non-disruptive service to all intermediate connections; subsequent reconnection of active sewer connection(s); lining/sealing of lateral sewers (including ”top hats” where required), facilitating watertight connections into sewers and manholes; restoring affected manhole conditions; performing initial and final cleaning; performing CCTV inspections as specified, and final testing of the lined pipe system.

C. The unit bid price for rehabilitation of sewer by CIPP liner includes liner installation, connection of the liner at the manholes, final cleaning, testing of liner samples, and final CCTV inspection. All other items, including bypass pumping; internal/external point repairs; lining of laterals; sealing of laterals; lining/sealing of lateral sewers (including installation of “top hats”); reconnection of property connections; restoring manholes; initial CCTV inspection and initial cleaning are covered by separate bid items as described in Section 01200.

1.02 RELATED SECTIONS

A. The Work of the following Sections specifically apply to the Work of this Section. Other Sections of the Specifications, not referenced below, shall also apply to the extent required for proper performance of Work.

1. Section 01532D: Manholes Condition Assessment

2. Section 02491: Rehabilitation of Sanitary Sewer Manholes

3. Section 02511: Preconditioning and Cleaning Manholes and Sewers
4. Section 02522 Cured-in-Place Service Lateral Liner
5. Section 02730 Sewers & Accessories
6. Section 02735 Sewer Service Connections
7. Section 02750: Wastewater Flow Control
8. Section 02752: Internal Sewer Condition Assessment
9. Section 02757 Point Repair of Sanitary Sewers

1.03 SPECIFICATIONS AND STANDARDS

A. Except as otherwise indicated, the current editions of the following apply to as a minimum to the Work of this Section:

1. ASTM D 256 Standard Test Methods for Determining the Izod Pendulum Impact Resistance of Plastics.
2. ASTM C 581 Standard Practice for Determining Chemical Resistance of Thermosetting Resins Used in Glass-fiber-reinforced Structures Intended for Liquid Service.
3. ASTM D 543 Practices for Evaluating the Resistance of Plastics to Chemical Reagents.
4. ASTM D 578 Specification for Glass Fiber Strands.
5. ASTM D 638` Test Method for Tensile Properties of Plastics.
6. ASTM D 695 Test Method for Comprehensive Properties of Rigid Plastics.
7.. ASTM D 790 Test Method(s) for Flexural Properties of Un-reinforced and Reinforced Plastics and Electrical Insulating Materials.

8.	ASTM D 903	Standard Test Method for Peel or Stripping Strength of Adhesive Bonds.
9.	ASTM D 1682	Standard Test Methods for Determining Tube Strength.
10.	ASTM D 2290	Standard Test Methods for Tensile, Compressive, and Flexural Creep and Creep Rupture Practices.
11	ASTM D 3567	Standard Practice for Determining Dimensions of “Fiberglass” (Glass-Fiber-Reinforced Thermosetting Resin) Pipe and Fittings.
12.	ASTM D 3839	Practice for Underground Installation of Fiberglass (Glass-Fiber-Reinforced Thermosetting Resin) Pipe.
13.	ASTM D 3861	Benchmark Test to Determine Waste Stream Compatibility with the CIPP Liner.
14.	ASTM D 4166	Test Method for Thickness of nonmagnetic Materials by Means of a Digital Magnetic Intensity Instrument.
15.	ASTM D 5813	Cured-In-Place Thermosetting Resin Sewer Piping Systems.
16	ASTM D 5947	Standard test Methods for Physical Dimensions of Solid Plastics Specimens.
17.	ASTM F 1216	Standard Practice for Rehabilitation of Existing Pipelines and Conduits by the Inversion and Curing of a Resin-Impregnated Tube.
18.	ASTM F 1743	Rehabilitation of Existing pipelines and conduits by pulled-in-place installation of cured-in-place thermo-setting resin pipe.
19.	ASTM F 2561	Standard Practice for Rehabilitation of a Sewer Service Lateral and Its Connection to the Main Using a one-piece Main and Lateral CIPP liner
20.	ASTM F 2019	Standard Practice for Rehabilitation of Existing Pipelines and Conduits by the Pulled in Place

Installation of Glass Reinforced Plastic (GRP) Cured-in-Place Thermosetting Resin Pipe (CIPP).

1.04 SUBMITTALS

A. The following shall be submitted to the City in writing prior to or at the time indicated in accordance with the Specification Section 01340. Failure to do so will prevent progression of the Work to the next step.

1. CIPP system manufacturer literature **(With the Bid Documents)**

2. Written certification from the manufacturer that the Contractor is an approved applicator of lining materials **(With the Bid Documents).**

3. Details concerning a) location and contact information of wet out facility to facilitate wet out facility inspection(s) and b) location and contact information of third party laboratory testing facility to facilitate third party laboratory testing inspections **(At Pre-Construction Meeting)**

4. Certified copies of manufacturer test reports on physical properties and chemical resistance of the proposed resin **(At Pre-Construction Meeting)**.

5. Information from the resin manufacturer including specifications, characteristics, properties, type test information and methods of application, including a written certification that the resin material is appropriate for the intended application **(At Pre-Construction Meeting)**.

6. Manhole Sealing and Invert Rebuilding Methods and Materials **(At Pre-Construction Meeting)**.

7. CIPP Repair Methods [If Required] **(Before Repairs Are Made)**.

8. Point Repair Methods [If Required] **(Before Repairs Are Made)**

9. Certified copies of test reports on CIPP samples obtained during actual installation in the presence of the Contractor **(After Completion of Each Section)**.

10. Process Control Sheet to include Temperature/Time Log Information, Tap Cut Information and Curing Cycle. **(After Completion of Each Section)**.

11. Physical Sample **(After Completion of Each Section)**

a. Samples removed for testing shall be individually labeled and logged to record the following:

1) City's project number, title and sewershed name

2) Sample number

3) Segment number of line as noted on plans indicating downtube and terminal manhole numbers including any intermediate manhole numbers if applicable

4) Date and time of sample

5) Name of contractor

b 1) Date, location and by whom tested

2) Results of test

c. Samples shall be numbered as follows:

1) Sample #/A: Terminal end restrained sample (every bag)

2) Sample #/B: Flat plate sample (limited number).

Note that only a limited number of Flat plate samples will be randomly ordered for testing during the course of the contract by the Engineer. Approximately 5% of the total number of liners ("bags") shall be tested, assuming the 5% sample tested satisfies test criteria.

1.05 INSTALLER QUALIFICATIONS

A. The Contractor or subcontractor performing the Work of this section shall be employees of the company manufacturing the CIPP system components or shall be licensed by the repair system manufacturer. The system installer shall meet the following minimum experience requirements:

1. A minimum of five years experience and 100,000 L.F. of installed lining in place within the last three years.

2. The Contractor's proposed superintendent for the Work shall have

a minimum of five years experience with three years as a superintendent.

B. It is the intent that these specifications be non-preferential and not restrict installation methodology or materials to a single vendor or sole source. Recognized cured-in-place-pipe liner systems are those equal to;

1. Inliner CIPP, produced by Inliner Technologies, Llc.

2. Insituform CIPP, produced by Insituform Technologies, Inc.

3. Blue-Tek Ultra Violet CIPP, produced by Reline America, Inc.

1.06 TRIAL TEST AND METHODOLOGY REVIEW

A. The Contractor shall comply with the following conditions before a cured-in-place technique becomes accepted as a viable option on a repeat basis:

1. A successful demonstration on a trial length of sewer pipeline, chosen by the Engineer, including type and quality control tests.

2. The trial shall be measured and paid at the unit price prior to approval for adoption by the Engineer to prove that the equipment, materials and installation methodology are fully acceptable to meet local conditions.

3. The finished liner installation must be sealed against any form of infiltration, especially at manholes and service lateral connections.

4. The Contractor shall allow for any further requirement of the Engineer, subsequent to the trial, to modify the equipment, material and/or installation methodology in order to complete the Work satisfactorily and meet all testing standards.

5. The Engineer shall formally accept the Contractor as having successfully completed the trial stage should this be the case.

PART 2 - PRODUCTS

2.01 MATERIALS

A. Flexible Liner or Fabric Tube

1. The flexible liner shall be a composite tube incorporating one or more layers of needled felt or equivalent woven or non-woven material manufactured under quality controlled conditions set by the manufacturer. If felt based, the CIPP liner tube shall conform to the requirements of ASTM F 1216 and ASTM D 5813, sections 6 and 8. If GRP based, the CIPP liner tube shall conform with the requirements of ASTM F 2019. The liner tube shall be sized so that, when installed, it will fit tightly and without twists inside the existing sewer and produce the required thickness after the resin is cured.

2. The flexible liner tube shall tightly fit the existing host sewer in both length and diameter, with allowance for proper longitudinal or circumferential stretching or shrinkage due to pressure or expansion being made during installation. The lining shall be fabricated in such a length that when installed, it will occupy exactly the length of the pipeline between the launch and reception manholes, and in addition, the through-flow channels of the launch, intermediate, and reception manholes, in accordance with paragraph 3.06 below. The finished CIPP liner shall be continuous and free from visual defects such as foreign inclusions, dry spots, tears, pinholes and delamination. The lining shall be of the correct diameter so that after inversion it does not wrinkle by more than 1% for linings in sewers equal to or greater than 24-inches internal diameter, and by more than 2% for linings in sewers less than 24-inches internal diameter below the spring line. Laser profiling shall be deployed at the contractors expense should wrinkles be confirmed greater than the above criteria.

3. The tube shall contain no intermediate layers that may delaminate after resin curing. It shall not be possible to separate any layers with a probe or knife blade such that the layers separate cleanly or the probe or knife blade moves freely between the layers. Where several layers of felt are required, the inner layer shall be stitched or spot-welded to form a tube. Each successive layer shall be individually wrapped around the previous one and spot-welded or stitched together. The outer layer of felt shall have an installation tube pre-bonded to it, or a sheet of this material shall be wrapped around the completed felt tube. Where a pre-bonded material is used, a covering strip shall be bonded over the seam to form an airtight joint.

4. The dimensions of the lining shall take account of any loss of pipe wall thickness due to hydrogen sulfide corrosion and deformation of the pipe to be lined where this is less than 10% of diameter.

B. Resin

1. The resin used to impregnate the tube shall produce a cured tube that shall be resistant to shrinkage, shall not corrode or oxidize, and shall also be resistant to abrasion from solids, grit, and sand in wastewater. Acceptable resins are Reichold Polylite® 33420-E, Alpha Owens Corning (AOC) 102TA or approved equal.

2. The resin shall have proven resistance to the municipal wastewater environment that may comprise, as a minimum, all of the following factors:

   a. Immersion in septic sewage at temperatures up to 85˚F;
   b. Exposure in hydrogen sulfide gas from septic sewage at temperatures up to 85˚F;
   c. Exposure to ultra-violet light (sunlight) at any stage prior to installation for felt. UV cured liner shall not be exposed to UV and must incorporate a non-UV-penetrable protective sleeve.

3. The internal wall color of the cured liner shall be white to light brown.

4. The chemical resistance of the resin system selected shall have been tested by the resin manufacturer in accordance with ASTM F1216, D543 or C581 as applicable. Exposure to the chemical solution listed below at temperatures of up to 85°F, shall result in a loss of not more than twenty percent (20%) of the initial physical properties when tested in accordance with ASTM D 543 for a period of not less than one year.

CHEMICAL SOLUTION	CONCENTRATION, %
Tap Water (pH 6-9)	100
Nitric Acid	5
Phosphoric Acid	10
Sulfuric Acid	10
Gasoline	100
Vegetable Oil	100
Detergent or Soap	0.1

5. The resin system shall be supplied by a company selected by the CIPP (liner) manufacturer. Only polyester, vinyl ester or epoxy resins complying with the following requirements shall be used:

   a. Polyester Resin: A resin created by reaction products between isophthalic/terathalic acid, maleic anhydride, and a glycol characterized by reactive unsaturation located along the molecular chain. This resin is compounded with a reactive styrene monomer and reacted together with initiators/promoters to produce cross-linked copolymer matrices.

   b. Vinyl Ester Resin: A resin created by reaction products of epoxy resins with methacrylic acid and characterized by reactive unsaturation located in terminal positions of the molecular chain. This resin is compounded with a reactive styrene monomer and reacted together with initiators/promoters to produce cross-linked copolymer matrices.

   c. Epoxy Resin: A resin created by the reaction of epichlorohydrin and Bisphenol-A, Bisphenol-F (or a Novalac in some cases) to yield a diglycidyl ether (triglycidyl ether in the case of Novalacs) having a terminal epoxy rings as the reactive sites. An epoxy resin system shall be composed of a diglycidyl ether of Bisphenol-A or Bisphenol-F resin solution, or a mixture of both, or other epoxy terminated base resin as pre-approved by the manufacturer, and a curing agent compatible with the saturation and cure methods for cured-in-place pipe. The curing agent may be the catalytic type, an addition curing agent type, or a mixture of both, as specified and proportioned according to the manufacturer's formulation. The epoxy resin system shall be:

      i. free from volatile organic compounds (VOC's),
      ii. be insensitive to ultra-violet light rays. UV cured liner shall not be exposed to UV and must incorporate a non-UV-penetrable protective sleeve.
      iii. low odor and,
      iv. meet DOT flash point classification as combustible liquid, or higher.

C. Catalyst system

1. The resin/catalyst and corresponding CIPP and corresponding cure schedule shall be included with the resin product data submittal.

2. The mixture ratio of resin and catalyst shall be approved by the resin manufacturer in writing with the catalyst identified by product name. Resins, catalysts and resin/catalyst mix ratio's shall not be altered during the performance of the work unless specifically approved by the Engineer in writing. Copies of all resin shipping documents indicating chain of custody, dates of shipment, etc. shall be provided upon request by the Engineer.

3. The proposed curing schedule and curing procedures shall be certified by the resin manufacturer. Cure schedules shall include specific temperature values and duration for the gel time, initial cure, exotherm, post cure and cool down phases of curing.

4. Curing may be accomplished by water, steam or ultraviolet light and shall be in accordance with the liner manufacturer's instructions.

D. CIPP Properties

1. The CIPP after curing shall meet the minimum structural properties listed below:

PROPERTY	REFERENCE	MINIMUM VALUE
Flexural Strength	ASTM D 790	4,500 psi
Short Term Flexural Modulus of Elasticity	ASTM D 790	250,000 psi
Wall Thickness	ASTM D 5813	Per Bid Form

E. CIPP Thickness

1. The wall thickness of the cured-in-place pipe (CIPP) liner shall be the strictest (thickest) thickness shown on the bid form in relation to the liner type, i.e., Felt based or GRP based liner, for each host pipe diameter, unless otherwise approved by the Engineer. Any alternative wall thicknesses proposed for consideration by the Engineer shall based on the generally accepted pipe formula and anticipated potential modes of failure.

2. Design parameters shall include, but are not limited to, pipe wall material strength, long term strength required to provide fifty (50) year design life, 120 LB/CF earth loads, groundwater loads with groundwater level at grade, modulus of soil reaction for pipe zone backfill material @ 1000 PSI, live loads, condition of existing pipe being lined, missing section geometry of existing pipe, localized or structural defects in the existing pipe and include a minimum overall safety factor of 2.0. The design selection shall, at a minimum, be capable of resisting buckling stresses and flexural stresses from external loads and ring tension and deflection failure from internal loads such that deflection along any diameter of the cross section does not exceed ten (10) percent of the nominal inside diameter of the pipe being lined. If a determination is made that the existing pipe being lined is fully deteriorated and provides no support to the composite existing pipe/liner system, the equation for wall thickness (buckling) shall be based on equation X1.3 set forth in ASTM F 1216, Appendix X1. In no case shall the wall thickness of the liner as installed be less than the specified thickness indicated with the bid proposal sheet unless specifically approved and directed by the Engineer.

3. The final, i.e., installed, thickness of the CIPP liner shall be no less than the thickness given in the bid form. Thickness greater than required shall not be allowed if this results in an undesirable loss of hydraulic capacity. The required thickness shall be measured accurately using properly calibrated calipers in accordance with ASTM D 5813. Flexural testing shall be performed in accordance with ASTM D 790 and ASTM D 5947.

F Pre-Liner

1. At all locations where the CIPP Resin impregnated flexible liner tube is to be inverted into the host pipe, a pre-liner shall be pre-installed. The pre-liner is required to minimize resin loss, maintain uniform liner thickness, mitigate odor migration up service connections, facilitate liner tube installation where host pipe joints are open and differential, structural defects are jagged and likely to cause snagging, and to prevent blocked or plugged services and laterals.

2. The pre-liner tube shall be reinforced polymeric sheet formed into a tube sized to fit the host pipe being lined and shall be continuous with the proposed liner in length from manhole to manhole. Installation of the pre-liner shall be carried out in the presence of the Engineer. The pre-liner may be integral with the flexible liner

tube. Also for winched in place liners a pre-installed sliding foil shall be used whether or not an integrated pre-liner has been incorporated in the liner.

3. During thickness testing, the pre-liner tube shall be removed from the thickness core sample along with any inner liner film used

4. The pre-liner shall be non-porous, completely free from pin holes and bubbles, air-tight and impervious to resins even when inflated to 20% over its normal size (ID of host pipe).

G Manufacturer Facility and/or Wet-Out Facility Inspection(s)

Contractor shall allow in bid costs for travel to as well as safe and comprehensive inspection of the manufacturer facility and/or wet-out facility by the Engineers representative(s) upon request by the Engineer following the receipt of a CIPP repair methodology submittal from the Contractor.

H. Third Party Testing Laboratory inspection

Contractor shall allow in bid costs for travel to as well as safe and comprehensive inspection of the third party testing laboratory by the Engineers representative(s) upon request by the Engineer following the receipt of a CIPP lining methodology submittal from the Contractor.

PART 3 - EXECUTION

3.01 SUPERVISION OF WORK

A The Contractor shall perform the work with oversight of a City Inspector for the duration of the installation.

3.02 DELIVERY, STORAGE, AND HANDLING

A. If the flexible tube is impregnated with resin at the factory, it shall be transported, installed, and cured before expiration of the shelf life.

B. Impregnated liner tube shall be stored and transported in accordance with the strictest requirements of pipe manufacturer.

C. No cuts, tears, or abrasions shall occur during handling. The Engineer may inspect the tube on site before it is placed into the host pipe.

3.03 TEMPORARY FLOW BYPASS AND DIVERSION PUMPING

A. Temporary Bypass Pumping shall be carried out in accordance with Specification Section 02750.

3.04 PRE-INSTALLATION PROCEDURES

A. All requisite pre-installation submittals shall be approved.

B Preconditioning and Cleaning shall be carried out in accordance with Section 02511. In addition to the requirements of Section 02511, the Contractor shall, immediately prior to installation of the lining, high pressure flush and vacuum every sewer section to be rehabilitated and repaired, including pertinent manholes, and remove any root, grease buildup or any other obstruction that may interfere with lining operations.

C. Condition of existing line shall be verified following cleaning by CCTV sewer inspection in accordance with Section 02752.

D. The accurate location and serviceability of all existing laterals and service connections (taps) shall be confirmed. Serviceability shall be confirmed by flowing water, dye testing or visually with CCTV sewer inspection.

E. The Contractor shall perform any necessary external point repairs to remove structural collapse, unacceptable deformation, blockages or to correct sags etc., as required by the Engineer.

3.05 GENERAL INSTALLATION PROCEDURES

A. Resin Impregnation of the Flexible Tube

1. The flexible tube shall be vacuum impregnated with resin under controlled conditions or, with the approval of the Engineer, by such other means compatible with the system employed that the contractor may elect in order to achieve comprehensive wet out. The volume of resin used shall be sufficient to fill all voids in the tube material at normal or design thickness and diameter. The volume of resin shall sufficient to allow for the change in resin volume due to polymerization and to allow for any migration of resin into the cracks and joints in the original pipe due to pre-liner softening during the curing process..

2. Thoroughly saturate flexible tube prior to installation. Catalyst system or additives compatible with the resin and flexible tube shall be as recommended by the resin supplier and the CIPP liner

manufacturer.

3. Handle the resin impregnated flexible tube to retard or prevent resin setting until it is ready for insertion.

B. Insertion of the Flexible Tube

1. The resin impregnated tube shall be inserted through an existing manhole or other access by means of an inversion process, drawing in place with a winch or by other approved method and the application of a hydrostatic or other pressure head. The pressure or force exerted shall be sufficient to fully extend the tube to the next designated manhole or termination point. The inversion head or other pressure head shall be sufficiently large to expand the flexible tube tightly to the pipe wall producing dimples at side connections. Care shall be taken during tube installation not to over-stretch or over-stress the fabric fiber. For winched in place liners a sliding foil shall be pre-installed prior to winching the liner tube in place in order to ensure that the liner tube is not overstressed or damaged during installation.

2. A lubricant meeting the CIPP liner manufacturer's/resin supplier's recommendations, if any, shall be used. The lubricant shall be a nontoxic, oil-based product that has no detrimental effect on the tube, boiler or other heating system, pumps or other equipment used for the tube installation or curing process. The lubricant will not support the growth of bacteria and shall not adversely affect the existing conduit or the fluids to be transported by it.

C. Curing

1. Unless instructed otherwise, the local repair installation shall be monitored by CCTV and resulting digital video presented to the Engineer. The video shall incorporate all other video footage of the rehabilitated pipeline.

2. Where non-UV curing procedures are deployed following installation of the resin-impregnated flexible tube, a suitable heat source, i.e., steam or heated water, and appropriate equipment to ensure heat is uniformly distributed throughout the length of the pipe being lined shall be used. The heat source and circulation equipment shall be capable of raising the pressurized interior of the pipe uniformly to and above the temperature required to effect cure of the resin. The curing process, temperature and period of the process shall conform to the manufacturer's recommendations.

3. The non-UV curing procedures employed shall include the provision of temperature and pressure gages placed both at the upstream inlet and downstream outlet, as well as at intermediate access points, if any, to monitor temperatures and pressures during the cure period. Automatic log cure time-temperature data with a print out from the data logger shall be provided to the Engineer Initial cure will occur during the temperature heat-up and is completed when exposed portions of the liner appear to be hard and sound and the temperature sensors indicate that the temperature is of a magnitude to realize an exothermic cure in the resin. After initial cure is reached, the temperature shall be raised to the post cure temperature and held for the period recommended by the resin manufacturer. Curing must take into account the existing pipe material, the resin system, and the ground conditions (temperature, moisture level, and thermal conductivity of the soil).

4. Where UV curing procedures are used the curing process, temperature and duration of the process shall strictly conform to the manufacturer's recommendations. Procedures employed shall include the provision of temperature and pressure gages placed both at the upstream inlet and downstream outlet, as well as at intermediate access points, if any, to monitor temperatures and pressures during the cure period. Automatic log cure time-UV intensity - temperature data with a print out from the data logger shall be provided to the Engineer on completion to confirm that the manufacturer's instructions have been fully complied with. Curing must take into account the existing pipe material, the resin system, and the ground conditions (temperature, moisture level, and thermal conductivity of the soil).

5. Cool down of the cured pipe liner shall be in accordance with the resin manufacturer's recommendations.

6. The Contractor SHALL COMPLETE A PROCESS CONTROL SHEET FOR EACH AND EVERY LINING COMPLETED. The form of the process control sheet shall be as directed by the Engineer. Initial cure may be considered completed when exposed portions of the flexible tube pipe take a hard set and temperatures are adequate, as recommended by the manufacturer.

D. Service Lateral Reconnection

1. All service laterals (including backdrops) shall be reconnected to the lined sewer within 24 hours following the lining process, unless

otherwise allowed by the Engineer.

2. The reconnection process shall be monitored by color pan, tilt and zoom CCTV cameras.

3. Lateral and service lines (including backdrops) shall be reconnected by either of the two methods following as directed by the Engineer:

   a. Robotic Reconnection: The CIPP lining shall be cut insitu by a remotely controlled robotic cutter. The liner shall be cut out flush with the internal dimensions of the lateral or service connection, or

   b. Sealing Tube Reconnection: A "Top Hat" type sealing tube or similar cured-in-place liner shall be with a minimum of eighteen inches (18") into the lateral or service connection from the mainline sewer. The lateral shall be cleaned and prepared for the installation in accordance with the manufacturer's recommendations. The resin-impregnated, flexible tube shall be inserted and cured by a device positioned in the mainline sewer pipe. The "top hat" shall create a continuous, watertight pipe-within-a-pipe to eliminate any visible infiltration and root growth at the lateral to mainline connection.

4. Where in the Engineer's opinion the cut surfaces are ragged or in generally unacceptable condition the Engineer may require all cut surfaces to be treated and/or sealed with additional application of resin material or as otherwise directed. The Contractor is cautioned that all laterals that are connected into rehabilitated pipelines shall be designed and installed to ensure that groundwater is not permitted to enter the pipeline via the interface between the lining and the existing host pipe. Absence of controls to meet this requirement may result in the contractor rectifying the anomaly with other remedial measures to the satisfaction of the Engineer at the Contractors cost. Such remedial measure may as a minimum include the installation of a sealing tube.

E. The finished CIPP shall be continuous and free from visual defects such as foreign inclusions, dry spots, pinholes, delamination and wrinkles specified above. Any section of lining with such defects shall be removed and replaced at no additional cost to the City.

F. If in the course of the work, an existing service connection is not

reintroduced through the liner the contractor must return to that location to reconnect the service. The reconnection shall be made at the unit price and there shall be no additional compensation for remobilization or set-up.

3.06 MANHOLE CONNECTIONS

A. The installed CIPP liner shall make a tight seal with the host pipe at the manhole opening with no annular gaps that could allow infiltration into the manhole. In the event that a gap does occur between the CIPP liner and host pipe, the gap shall be sealed watertight by either of the following methods:

1. Apply a ¼" to ½" diameter activated Oakum band soaked in prepolymer urethane resin sealant (AV-219 by Avanti International or equal) circumferentially at the gap; or

2. Use an approved epoxy mortar, resin mixture compatible with the CIPP liner, or similar material (subject to Engineer approval) to seal the gap. All materials for connection of the liner to the manhole must be as recommended and specifically approved by the CIPP liner manufacturer.

B. Liners installed straight through existing manholes shall require the top half of the CIPP to be neatly cut off, at least four (4) inches away from the manhole walls. Breaking or shearing of the CIPP will not be allowed. The channel in the manhole shall be a smooth continuation of the pipe(s) and shall be merged with other lines or channels, if any. The channel cross-section shall be U-shaped with a minimum height of one-half pipe diameter (host pipe diameter smaller than 15 inches) to three-fourths of the pipe diameter (host pipe diameter 15 inches and larger). The side of the channels shall be built up with mortar/concrete to provide benches at a maximum 1 in 12 pitch towards the channel.

C. Use an approved epoxy mortar, compatible resin or similar material to form a smooth transition to eliminate sharp edges of CIPP, within the host pipe and in manholes at the concrete bench, and channel invert. Build up and smooth invert of manhole to match flow line of new CIPP. All materials must be as recommended and specifically approved by the manufacturer of the liner.

3.07 FIELD TESTING

A. After the installation procedures have been performed and prior to reinstatement of service lateral connections, the Contractor shall perform a hydrostatic test in the presence of the Engineer on the sewer line to determine if it is watertight.

B The hydrostatic (exfiltration) test shall be performed using the existing hydrostatic head provided by the inversion standpipe. The test time shall be 5 minutes during which no makeup water shall be added to the standpipe. If at the end of the test period no water loss is observed in the standpipe, the watertightness of the cured-in-place pipe shall be considered satisfactory. All costs for the hydrostatic testing shall be considered incidental to the work and shall be included in the unit price per linear foot.

C. For each length of line installed, two liner samples shall be required: A section of cured pipe cut from the terminal manhole and which has been inserted through a like diameter pipe held in place by a suitable heat sink (such as sandbags); and a factory produced sample fabricated from material taken from the tube and the resin/catalyst system used and cured in a clamped mold placed in the downtube. Each sample shall be large enough to provide a minimum of five (5) test specimens.

D. Analyze samples according to ASTM D 790 and ASTM D 5813 and as directed by the Engineer. Analysis shall be performed by an independent laboratory approved by the City. Submit the report to the Engineer.

E. A corresponding sample of local repair material from the testing above shall be subject to delamination tests by aggressively prying and separation into layers with a knife or sharp-edged instrument. No separation shall be possible. Results shall be included in the report above.

F. Pipe failing to meet the requirements of paragraph 2.01 is subject to rejection and replacement at the contractor's expense.

G. Testing and inspection, including taking of test specimens, testing of specimens, post installation television inspection, and watertightness testing in accordance with Section 02730, are considered incidental to the CIPP work and shall be included in the unit price per linear foot.

3.08 POST-INSTALLATION CCTV INSPECTION

A. Following completed installation of the CIPP liner, CCTV sewer inspection shall be carried out in accordance with the requirements of the City of Atlanta Specification of Internal Sewer Condition Assessment (Section 02752 in these Specifications). The post-installation CCTV inspection shall take place as shortly after completion of each section as is feasible, but in no case more than ten (10) calendar days thereafter. The finished video shall be continuous over the entire length of the sewer between two manholes and shall be completely free from visual defects. All costs

associated with the post-installation CCTV sewer inspection shall be considered incidental to the CIPP work and shall be included in the unit price per linear foot.

B. Submit to the Engineer a color digital video CD-ROM showing completed Work.

C. Correction of failed CIPP or CIPP deemed defective from post-installation television inspection or test reports for structural values, thickness, etc., shall be repaired at no extra cost to the City. Method of repair, which may require field or workshop demonstration, shall be approved by the Engineer.

D. An additional CCTV inspection shall be allowed for in the Contractor's unit price and work schedule, to be performed one year following the installation of a CIPP repair described above in Item C. Should any fault be found with the repair following the yearly inspection the fault shall be rectified as specified by the City. Rectification may include complete removal and renewal of the previously installed repair and re-inspection one year later. Correction of failed CIPP or CIPP deemed defective from mid-warranty internal condition inspection or test reports for structural values, thickness, etc., shall be repaired or replaced at no extra cost to the City. The CCTV inspection shall be performed in accordance with the requirements of Section 02752 and shall be considered incidental to the CIPP work.

3.09 TYPE TESTING

A. Type testing shall be carried out prior to the commencement of the Work and the results submitted by the CIPP liner manufacturer to confirm that the materials used comply with the specification. Tests shall be carried out by an independent third party laboratory body approved by the Engineer.

B. The following tests shall be carried out and corresponding progress reports and results provided to the Engineer, on samples of cured resin/felt composite conforming to this specification:

1. Tensile Strength

2. Tensile modules of elasticity

3. Flexural strength

4. Flexural modules of elasticity

5. Density

6. Hardness (Barcol)

7. Impact resistance

8. Shear strength

9. Abrasion resistance

10. Coefficient of thermal expansion

11. Compressive strength

12. 100 day acid test

13. Long term flexural creep test

C. Details of standard test procedures shall conform to the relevant ASTM standard.

D. Additional requirements are detailed below:

1. Tensile Strength Testing: Test Methods in accordance with ASTM D 3039/ D 3039M Where required samples shall be without end pieces. The rate of grip separation shall be 1 mm/minute. The tensile modules of elasticity shall be measured over the linear portion of the load extension curve. If the load extension curve contains no straight portion, the modules shall be taken as the slope of the tangent to the curve over the first 0.2% strain ignoring the initial strain required to straighten the sample. Samples of single layer felt/resin or GRP/resin composite and multi-layer (2 or 3 layers of felt) composite shall be tested. The test report shall contain full particulars concerning the test and shall also include load extension curves for each sample.

2. Flexural Testing: Samples of single layer felt/resin composite and multi-layer (2 or 3 layers of felt) composite shall be tested. The modulus of elasticity shall be measured in accordance with Tensile Strength Testing above. The test report shall be measured in accordance with Tensile Strength Testing above. The test report shall contain all particulars in accordance with the relevant standard.

3. Density: Determine the hardness of single layer and multi-layer samples of cured resin/felt composite, or GRP/resin composite, in accordance with the relevant standard.

4. Hardness: Determine the hardness of single layer and multi-layer samples of cured resin/felt composite in accordance with the relevant standard.

5. Impact Resistance: The impact resistance of samples of multi-layer resin/felt composite shall be determined. A minimum of ten specimens shall be tested. The test report shall include all relevant particulars required by the relevant standard.

6. Shear Strength: Determine the shear strength of a cured single layer sample of resin/felt composite. The samples shall be tested with the axis of the punch perpendicular to the sheet from which the samples were machined. The test report shall contain all relevant particulars the relevant standard.

7. Abrasion Resistance: The abrasion resistance of the resin/felt composite shall be measured in accordance with ASTM D-1044 using a Tabor abrader with H-18 Calibrase wheels and 1 kilogram weights. The material shall be tested with the surface dry, and again with the surface wet. After 2000 cycles the depth of wear shall be measured and recorded.

8. Coefficient of Thermal Expansion: The coefficient of the thermal expansion of the resin/felt composite shall be measured in accordance with ASTM D-696 or VDE 0304. The method adopted shall be maintained for all tests performed throughout the Contract.

9. Compression Testing: Samples shall be Type 1, and the speed of testing shall be 1 mm/minute. The test report shall contain all particulars required by the relevant standard.

10. 100 Day Acid Test: ASTM D 543 and ASTM D 3681Samples of single layer and multi-layer or resin/felt composite shall also be subjected to a 100 day acid test. Samples shall be prepared to tensile and flexural testing as heretofore specified, and shall be immersed in 10% V/V sulfuric acid at 40° C for 100 days. After removal from the acid samples shall be washed, dried and tested for tensile and flexural properties. The values of the tensile and flexural strengths obtained from such tests shall not be less than 75.1% of the minimum values specified by the tests.

11. Long Term Flexural Creep Test: Where directed by the Engineer, the Contractor will be required to initiate, with an approved testing laboratory, tests to substantiate the value of the long term flexural modulus of the structural layer used in the design of the lining. The tests shall be continued for the duration of the contract, and results provided at maximum intervals of three months. Long Term Flexural Modulus shall be 125,000 psi.

    a. All the above tests shall be carried out at 35°C ± 2°C (ambient sewer temperature).

    b. In addition Tests (1) to (4), above, i.e. tensile and short term creep tests, shall be carried out in parallel from the same samples at 25°C ± 2° (ambient laboratory temperature) for correlation purposes. A report on the form of correlation shall be submitted to the Engineer's along with other test progress reports and results.

    c. Properties of the cured composite Soft (Cured-in-Place) lining shall have the following minimum, values unless otherwise agreed by the Engineer:

        1) Flexural Strength
           4,500 psi (50 N/mm²)

        2) Flexural Modulus of Elasticity (short term)
           250,000 psi (2200 N/mm²)

        3) Wall Thickness
           (Design Thickness- inch)

PART 4 – WARRANTY

4.01 MATERIAL WARRANTY

A. A written guarantee of five (5) years shall be provided by the Manufacturer against any breakdown of the material effectiveness of the structural repair elements.

4.02 WORKMANSHIP WARRANTY

A. A written guarantee of two years minimum shall be provided by the Contractor against any shortcoming in workmanship.

END OF SECTION

ATTACHMENT A

PROCESS CONTROL SHEET - CIPP LINER (Following Mainline or Lateral Lining)

The Contractor shall complete a Process Control Sheet for each pipeline lined and shall submit a copy to the Engineer immediately following inspection of the lining installation. The Process Control Sheet shall include the information below as a minimum unless otherwise modified by the Engineer. In the event there are more than one inspector or contractor confirming the process completion per form, each section should be initialed by the performing inspector. All sections that were not completed due to lack of applicability to the rehab method used should have "N/A" entered.

Date(s) Rehabilitation Carried Out:

Date Process Control Sheet Completed: ☐ ☐

	General Process Control Section - *state whether process control sheet completed for* **Mainline , or Lateral**	
General	WEATHER ETC: Prior to Lining (include air temperature)	
	During Lining (include air temperature)	
	Number of Cleanouts? Complete and inspected	
	Laterals Rehabbed? Type and Distance (ft) from Upstream MH	
	Lateral Connection(s):•	
	• Number (ea), Clock ref. from US MH	Total No…….,
	• Sizes (in)	
	Confirm line CCTV'd and agreed lining viable ☐ Yes ☐ No	If no explain here:
	Confirm line been cleaned and prepared for lining? ☐ Yes ☐ No	If no explain here:
Location	Upstream Manhole ID ☐ Entry ☐ Reception	MH#
	Downstream Manhole ID ☐ Entry ☐ Reception	MH#
	Intermediate Manhole ID's	MH#
	Street Name(s)/Address	
CIPP Installation	INSTALLATION METHOD **	
	Inversion Start Time	
	Inversion Finish Time	
	Inversion Pressure (H_w/psi)	
	CURING DETAILS: • Start Time	
	• Temperature (^oF)	
	• Time to Soak (minutes)	
	• Curing Time	Start Time / Finish Time
	• Cooling Time	Start Time / Finish Time
	• Temperature at Release	
By Pass /Reinstate Flow	By Pass Commenced (Date/Time)	
	Main Flow Reinstated (Date/Time)	
	Laterals Flow Reintroduced (Date/Time)	
Temperature Monitoring	THERMOCOUPLE: • Type	
	• Temperature Range	
	• Entry Manhole	
	• Reception Manhole	
Testing *	Item A: Hydrostatic Test Complete? ☐ Yes ☐ No	
	Item B: Manhole Pipe Sample Complete? ☐ Yes ☐ No	
	☐ Yes ☐ No	
Signatures	**Contractor** By signing below, I agree that the above General Process Control section has been inspected and confirmed. I understand that I have the right to indicate, by my initials, which sections I am confirming if I have not completed all of the inspections myself. I am aware that all sections left blank will be considered incomplete and may be sent back with request for additional information.	**Inspector** By signing below, I agree that the above General Process Control section has been inspected and confirmed. I understand that I have the right to indicate, by my initials, which sections I am confirming if I have not completed all of the inspections myself. I am aware that all sections left blank will be considered incomplete and may be sent back with request for additional information.
	Type Name Here	Type Name Here
	Signature **X**	Signature X

* Testing Note: All samples removed for testing shall be individually labeled and logged to record the following: (1) Owner's project number and title (2) Sample number (3) Line Segment (4) Date and Time of Sample (5) Contractor Name (6) Date, location and by whom tested (7) Results of test

** Please indicate which method was used: e.g., Tower (T), CHIP unit (CHIP), or Winched-in-Place (WIP)

Contractor Specific Process Control Section		
Material Composition Details	SOFT LINING:	
	• Internal Diameter (in)	
	• Design Thickness (mm)	
	• Diameter Ratio (DR)	
	• Felt (details)	
	• Resin (details)	
	• Internal Skin (name)	
	Pre-Liner (details)	
	Wet Out Length (lf)	
	Final Length (lf)	
	RESIN:	
	• Batch Number	
	• Weight (lbs)	
	• Accelerator (name)	
	• Additives (name)	
	• Catalyzer (name)	
Wet - Out	MIXING DETAILS:	
	• Date / Time	
	• Temperature (^{o}F)	
	IMPREGNATION DETAILS:	
	• Start Date and Time	
	• Finish Date and Time	
	BAG CHILLING DETAILS:	
	• Date / Time	
	• Temperature (^{o}F)	
	Dispatch Date and Time	
	Arrival Date and Time	
Testing*	Date Submitted for Testing	
	Test Results Target Date	
Signatures	**Contractor** I agree that the above Contractor Specific Process Control Section is complete and accurate to the best of my knowledge. I understand that all sections that are left blank will be considered incomplete sections and may be sent back for additional information. Type Name Here Signature X	

* Testing Note: All samples removed for testing shall be individually labeled and logged to record the following: (1) Owner's project number and title (2) Sample number (3) Line Segment (4) Date and Time of Sample (5) Contractor Name (6) Date, location and by whom tested (7) Results of test

** Please indicate which method was used: e.g., Tower (T), CHIP unit (CHIP), or Winched-in-Place (WIP)

ATTACHMENT B

Company Logo and Contact Information

Test Report (CIPP)

Client:	Address Line 1	**Product Type:**	Felt CIPP	
	Address Line 2	**Manufacturer:**		
	City, State, Zip	**Sample Location:**	US/DS/INTERMEDIATE MH #	
Attention:	Contact Person	**Sample ID:**	A123456	
Report Date:	MM/DD/YYYY	**Design Thickness:**	6.0	mm
Report Number:	12345	**Design Thickness:**	0.236	inches
Project Name:	SG1PH1CIPPA - FC00000	**Installation Date:**	MM/DD/YYYY	
Contractor:	CIPP Contractor	**Tested By:**	John Smith	
USMH St Address:	230 Peachtree Street NE	**Diameter:**	8	inches
Pipe ID:	12345678901T98765432101	**Pipe Length:**	123	Feet

Flexural Properties (ASTM D 790)

Crosshead Speed: 0.089 in/min **Date of Test:** MM/DD/YYYY

Procedure: A

Specimen ID	Depth (IN)	Width (IN)	Length (IN)	Span (IN)	Flexural Yield Strength (PSI)	Modulus of Elasticity (PSI)
S1						
S2						
S3						
S4						
S5						
				Mean:	#DIV/0!	#DIV/0!
				Std Deviation:	#DIV/0!	#DIV/0!
				Reason for rejection:		

Liner Thickness (ASTM D 5813)

Measurement Position	0°	45°	90°	135°	180°	225°	270°	315°
Measured Thickness (mm)	5.998	6.011	6.011	6.123	6.089	6.122	6.235	6.333

Minimum Thickness 6.0 mm

Average Thickness 6.115 mm

Avg ≥ Min Thickness: **YES**

Signed: _____

Registered Professional Engineer

SAMPLE

SECTION 02530

Concrete Walks

PART 1 – GENERAL

1.01 SCOPE

A. The extent of concrete walks is as shown on the Drawings or as required to replace existing walks damaged or destroyed by the Contractor's work.

B. Concrete walk construction includes, but is not limited to, the furnishing, placing, forming, finishing, curing and jointing of Portland cement concrete on prepared subgrade for walks, sidewalks, wheelchair and/or curb cut ramps, paved medians, and drive ramps.

1.02 RELATED SECTIONS

A. The Work of the following Sections specifically apply to the Work of this Section. Other Sections of the Specifications, not referenced below, shall also apply to the extent required for proper performance of Work.

1. Section 03300: Concrete Work

PART 2 – PRODUCTS

2.01 MATERIALS

A. Forms: Either full depth steel or wood forms of a size and strength to resist movement during concrete placement and to retain horizontal and vertical alignment until removal. Use forms that are straight and free of distortion and defects. Use flexible spring steel forms or laminated boards to form radius bends.

B. Concrete: Ready-mix concrete of 3,000 psi comprehensive strength conforming to ASTM C94 except where small quantities are needed. In which cases, small capacity batchers or mixers may be used.

C. Joint Filler: Preformed joint filler meeting AASHTO M153 or AASHTO M213.

2.02 CONCRETE MIX

A. Design the mix to produce standard-weight concrete consisting of Portland cement, aggregate and water to produce the following properties:

1. Compressive Strength: 3000 psi minimum at 28 days as determined by ASTM C39.

2. Slump: 4 inches maximum per ASTM C143.

3. Air Content: 3% to 6%.

PART 3 – EXECUTION

3.01 SUBGRADE PREPARATION

A. Remove loose material from compacted subgrade immediately before placing concrete.

3.02 FORM CONSTRUCTION

A. Set forms to the required grades and lines rigidly braced and secured.

B. Check completed formwork for grade and alignment to the following tolerances:

1. Top of form: Within 1/8 inch of design line and grade.

2. Vertical face: Not more than 1/4 inch in 10 feet from vertical.

C. Thoroughly clean forms and coat with form release agent as required, ensuring form separation from concrete without damage before placing concrete.

D. Slip form placement methods will be permitted provided completed walks meet requirements herein specified. Should slip form method not produce a product conforming to these specifications, the unacceptable work is to be removed and reconstructed, at no additional cost to the City, using fixed forms.

3.03 REINFORCEMENT

A. Locate, place and support reinforcement (if any), as indicated or specified.

3.04 CONCRETE PLACEMENT

A. Do not place concrete until subgrade and forms have been checked for line and grade. Moisten subgrade as required to provide a uniform dampened condition at the time concrete is placed. Do not place concrete on muddy or frozen subgrade.

B. Place concrete in one course, monolithic construction, for the full width and depth of walks.

C. Spread concrete as soon as it is deposited on the subgrade using methods that prevent segregation and separation of the mix, and with as little re-handling as possible. Consolidate concrete along the face of forms and adjacent to transverse joints.

3.05 JOINTS

A. General: Construct expansion and weakened plane contraction joints true to line with face perpendicular to surface of the walk, unless otherwise shown. Construct transverse joints at right angles or radial to the walk centerline, unless otherwise shown. When the walkway is abutting existing walks, place transverse joints to align with previously paved joints, unless otherwise indicated.

B. Contraction Joints: Provide weakened plane transverse joints as shown on the Drawings. Construct joints for a depth equal to at least 1/3 the walk thickness, using one of the following procedures:

1. Tooled Joints: Form joints in the fresh concrete by grooving the top portion of slabs and finishing edges to a ¼ inch radius.

2. Sawed Joints: Cut joints, approximately 3/16 inch wide, into hardened concrete as soon as the surface will not be torn, abraded, or otherwise damaged by the cutting action.

C. Expansion Joints: Form expansion joints with ½ inch thick pre-molded joint filler and install sealant after the concrete has hardened. Sealant shall be grey colored elastomeric polyurethane sealant equal to Sonneborn Sonolastic SL-1 as manufactured by Degussa Building Systems. Locate transverse expansion joints no more than 100 feet apart. Where walks abut cold joints, curbs, existing walks, walls, catch basins, manholes, or other structures, provide expansion joint. Furnish joint fillers in one-piece that extend the full width and recess to ½ inch depth from the surface to receive sealant of the joint. After concrete and sealant installation is complete, trim any excess joint material flush with concrete surface.

3.06 CONCRETE FINISHING

A. After striking off and consolidating concrete, smooth the exposed surface to a uniform finish by screeding and floating.

B. Before the surface is given the final finish, test the surface for trueness with a 10 foot straightedge. Correct any irregularities more than l/4 inch in l0 feet.

C. Round all edges to ¼ inch radius.

After completion of floating and when excess moisture or surface sheen has disappeared, complete surface finishing, as follows:

1. Broom finish: by drawing a stiff-bristle broom across the concrete surface, perpendicular to walk centerline.

3.07 CURING

A. Protect and cure finished concrete walks with type 2 membrane curing compound.

3.08 REPAIR AND PROTECTION

A. Repair or replace broken or defective walks using methods acceptable to the Engineer. Where removal is required, remove and replace complete panels.

B. Protect completed walks from damage until final acceptance.

C. Clean concrete walks free of stains, discolorations, dirt, trash, leaves and other foreign material just prior to substantial completion and final acceptance.

3.09 TRAFFIC CONTROL

A. Refer to Specification Section 01500: Temporary Control of Construction Operations for requirements.

END OF SECTION

SECTION 02532

Concrete Curbs and Gutters

PART 1 – GENERAL

1.01 SCOPE

A. The extent of concrete curbs and gutters is as shown on the Drawings or as required to replace curbs and gutters damaged or destroyed by the Contractor's work.

1.02 RELATED SECTIONS

A. The Work of the following Sections specifically apply to the Work of this Section. Other Sections of the Specifications, not referenced below, shall also apply to the extent required for proper performance of Work.

1. Section 02530: Concrete Walks

2. Section 03300: Concrete Work

PART 2 – PRODUCTS

2.01 FORMS

A. Either full depth steel or wood forms of a size and strength to resist movement during concrete placement and to retain horizontal and vertical alignment until removal. Use forms that are straight and free of distortion and defects.

B. Use flexible spring steel forms or laminated boards to form radius bends as required.

2.02 CONCRETE

A. Ready-Mix concrete, 3,000 psi compressive strength, conforming to ASTM C94.

2.03 JOINT FILLER

A. Preformed joint filler meeting AASHTO M153 or AASHTO M213.

2.04 CONCRETE MIX

A. Comply with applicable requirements of Section 03300 for concrete mix design, sampling and testing, and quality control, and as herein specified. Design the mix to produce standard-weight concrete consisting of Portland cement, aggregate and water to produce the following properties:

1. Compressive Strength: 3000 psi minimum at 28 days as determined by ASTM C39.

2. Slump: 4 inches maximum per ASTM C143.

3. Air Content: 3% to 6%.

PART 3 – EXECUTION

3.01 SUBGRADE PREPARATION

A. Remove loose material from compacted subgrade immediately before placing concrete.

3.02 FORM CONSTRUCTION

A. Set forms to the required grades and lines rigidly braced and secured.

B. Check completed formwork for grade and alignment to the following tolerances:

1. Top of Form: Within 1/8 inch of design line and grade.

2. Vertical Face: Not more than 1/4 inch in 10 feet from vertical.

C. Thoroughly clean forms and coat, with form release agent as required ensuring form separation from concrete without damage, before placing concrete.

3.03 REINFORCEMENT

A. Locate, place and support reinforcement, if any, as indicated or specified.

3.04 CONCRETE PLACEMENT

A. General: Comply with the applicable requirements of Section 03300 for mixing and placing concrete and as herein specified.

B. Do not place concrete until subgrade and forms have been checked for line and grade. Moisten subgrade as required to provide a uniform dampened condition at the time concrete is placed.

C. Place concrete using methods that prevent segregation and separation of the mix, and with as little re-handling as possible. Consolidate concrete along the face of forms with an internal vibrator. Keep vibrator away from joint assemblies, reinforcement, or side forms. Discontinue vibration before segregation or excessive surface grout occurs. Perform any necessary hand spreading and consolidation with hand tools that will not cause segregation and separation.

Deposit and spread concrete in a continuous operation between transverse joints, as far as possible.

Machine methods of placing and forming may be used at Contractor's option, provided that an acceptable finished product, true to line, grade and cross section and conforming to specified finish and jointing requirements, is consistently produced. If machine results are not acceptable, remove and replace with formed concrete as specified.

3.05 JOINTS

A. General: Construct contraction and expansion joints true to line with face perpendicular to surface of curb and gutter, unless otherwise shown. Construct transverse joints at right angles or radial to the curb centerline, unless otherwise shown.

When curb and gutter is constructed abutting concrete pavement, place transverse joints to align with pavement joints.

B. Contraction Joints: Provide contraction joints at intervals of 10 feet, except where a lesser interval is required for closure, but no section is to be less than 6 feet in length.

Contraction joints may be formed by metal divider plates or may be sawed. In either case, joint depth is to be 20 to 25 percent the depth of the concrete.

C. Expansion Joints: Form expansion joints with 1/2 inch thick premoulded joint filler. Locate expansion joints no further than 100 feet apart, unless otherwise shown, where curb and gutter is constructed adjacent to asphalt concrete paving. Match pavement expansion joints where curb and gutter is placed abutting concrete pavement.

Furnish joint fillers in one-piece that extend the full width and depth of the joint. After concrete is finished, trim any protruding joint material flush with concrete surface.

3.06 CONCRETE FINISHING

A. After striking off and consolidating concrete, smooth the exposed surface to a uniform finish by screeding and floating.

B. With the exception of sawed joints, round all joint edges to 1/4 inch radius.

C. After completion of floating and when excess moisture or surface sheen has disappeared, complete surface finishing as follows:

1. Broom finish, by drawing a fine-hair broom across the concrete, perpendicular to the line of traffic.

2. Trowel finish, smooth, and free of trowel marks, uniform in texture and appearance.

3.07 CURING

A. Protect and cure finished concrete curbs and gutters complying with applicable requirements of Section 03300.

3.08 REPAIR AND PROTECTION

A. Acceptably repair or replace broken or defective curbs and gutters.

B. After the concrete has set sufficiently, backfill and compact adjacent ground to design line and grade.

C. Protect completed curbs and gutters from damage until final project acceptance.

D. Clean concrete curbs and gutters free of stains, discolorations, dirt, trash, leaves, and other foreign material just prior to final inspection.

3.09 TRAFFIC CONTROL

A. Refer to Specification Section 01500: Temporary Control of Construction Operations for requirements.

END OF SECTION

SECTION 02535

REINFORCED CONCRETE STORM DRAIN PIPE

PART 1 GENERAL

1.01 SCOPE

A. The Contractor shall furnish all labor, materials, equipment and incidentals required to install all reinforced concrete storm drain pipe as shown on the Drawings and as specified herein.

1.02 SUBMITTALS

A. Submittals shall be made in accordance with the requirements of the General Conditions of the Contract Documents. In addition, the following specific information shall be provided:

1. Product Data: The Contractor shall submit, for the Engineer's approval, descriptive details and shop drawings covering full details of pipe, fittings, specials, joints and the assembly thereof, joint materials and details thereof, and full details and cuts of all castings to be incorporated into the Work.

2. Manufacturer’s Installation Instructions: The Contractor shall submit special procedures required to install products specified.

3. Manufacturer’s Certificate: The Contractor shall submit a manufacturer’s certificate certifying that products meet or exceed specified requirements.

B. For pipe 24-inches in diameter or greater, submit shop drawings to the Engineer for review showing a complete laying plan of all pipe, including all fittings, adapters, and specials along with the manufacturer’s drawings and specifications indicating complete details of all items. The pipe details shall include stationing, pipe class or design and supporting computations; and laying schedule which specifies pipe class, class coding, pipe stationing for all changes in grade or horizontal alignment, transition stations for various pipe classes and the limits of each. The above shall be submitted to the Engineer for review before fabrication and shipment of these items.

1.03 QUALITY ASSURANCE

A. Reference Standards: The Contractor shall comply with the applicable provisions and recommendations of the latest editions of the following standards, except as otherwise shown on the Drawings or specified herein.

1. ASTM C33 – Specification for Concrete Aggregate

2. ASTM C76 - Standard Specification for Reinforced Concrete Culvert, Storm Drain, and Sewer Pipe

3. ASTM C150 – Standard Specifications for Portland Cement

4. ASTM C443 - Standard Specification for Joints for Concrete Pipe and Manholes using Rubber gaskets.

5. ASTM C655 – Standard Specifications for Reinforced Concrete D-Load Culvert, Storm Drain and Sewer Pipe

6. ASTM C1479 - Standard Practice for Installation of Precast Concrete Sewer, Storm Drain, and Culvert Pipe Using Standard Installations.

7. ASTM C1619 – Standard Specification for Elastomeric Seals for Joining Concrete Structures

1.04 TRANSPORTATION AND HANDLING

A. Unloading: Furnish equipment and facilities for unloading, handling, distributing and storing pipe, fittings, valves and accessories. Make equipment available at all times for use in unloading. Do not drop or dump materials. Any materials dropped or dumped will be subject to rejection without additional justification.

B. Handling: Handle pipe, fittings and accessories carefully to prevent shock or damage. Handle pipe by rolling on skids, forklift or front loader. Do not use material damaged in handling.

1.05 STORAGE AND PROTECTION

A. Store all pipe which cannot be distributed along the route. Make arrangements for the use of suitable storage areas.

B. Stored materials shall be kept safe from damage. The interior of all pipes, fittings and other appurtenances shall be kept free from dirt or foreign matter at all times.

C. Pipe shall be stored per the manufacturer’s recommendations.

D. Store joint gaskets in a cool location, out of direct sunlight. Gaskets shall not come in contact with petroleum products. Gaskets shall be used on a first-in, first-out basis.

1.06 ACCEPTANCE

A. Acceptance of pipe shall be on the basis of plant load-bearing tests of the pipe, material tests and inspection of manufactured pipe for visual defects and imperfections as described in paragraph 5.1.1 of ASTM C76.

B. All pipe shall be manufactured in accordance with the American Concrete Pipe Association QCast Storm Sewer quality assurance program. If pipe producer is not QCast certified, each length of pipe shall be stamped by a regular employee of an approved testing agency.

C. If producer is not QCast certified, provide results of tests on pipe, pipe materials, joint material and made-up joints by an independent testing laboratory approved by the Engineer. Include materials, absorption, crushing and hydrostatic leakage tests on pipe of each size in accordance with applicable specifications.

D. Inspect pipe after delivery for QCast or laboratory stamp, shape, cracks, uniformity, blisters and imperfect surfaces, hammer test, damaged ends and gasket grooves. Any pipe repaired or patched is subject to rejection if such repairs or patches, in the opinion of the Engineer, are not sound and properly finished.

E. Pipe shall not be shipped until it has attained full specified 28 day compressive strength.

PART 2 PRODUCTS

2.01 GENERAL

A. All reinforced concrete pipe used in conveying storm flows shall conform to the requirements ASTM C76, except as specifically extended, modified, or amended in this section.

B. All reinforced concrete storm drain pipe shall meet the standards for ASTM C76 Class III or as otherwise designated on the Drawings. All reinforced concrete pipe shall have a minimum of a B wall thickness unless shown otherwise on the Drawings or specified herein.

2.02 CONCRETE PIPE

A. Bell and spigot concrete pipe for storm sewers, manufactured in accordance with ASTM C76, shall be furnished in not less than eight (8) foot lengths. Special pieces and closure pieces may be of shorter lengths than specified in this section. Pipe shall be manufactured wet cast, dry cast, or centrifugally cast.

B. No lifting holes shall be provided in the wall of the pipe. Care shall be

exercised in handling and transporting the pipe so as to protect the full interior wall of the pipe. No inward projecting hooks or lift bars shall be used in lifting pipe. Extreme care shall be applied to handling pipe immediately after manufacture to prevent development of "cure" cracks and stress cracks due to transporting pipe before full length of curing time.

C. All reinforced concrete pipe shall be made with concrete with a twenty eight (28) day minimum compressive strength of 4000 psi and the absorption shall not exceed nine (9) percent. All cement and aggregate shall conform to the requirements of ASTM C76. Coarse aggregate shall meet the requirements of ASTM C33 of a size that provides a workable homogeneous, high quality concrete mixture, considering the particular wall thickness. Cement, for reinforced concrete pipe, shall be Type I/II portland cement. All admixtures shall be approved by the Engineer prior to use. Prior to manufacturing any pipe, including test pipe, the manufacturer shall submit the proposed concrete design mix to the Engineer for approval. The requirements of this article shall apply to all reinforced concrete pipe manufactured under the requirements of ASTM C76 and ASTM C443.

D. Reinforcement shall consist of either wire conforming to the standard specification for deformed steel wire for concrete reinforcement (ASTM A496), welded deformed steel wire fabric for concrete reinforcement (ASTM A497), of bars of intermediate grade steel conforming to standard specifications for billet steel bars for concrete reinforcement (ASTM A615, Grade 60), or from fabricated deformed steel mats for concrete reinforcing (ASTM A184). Steel areas shall be in accordance with ASTM C76. Pipe with a diameter of 42-inches and larger shall be reinforced with two (2) full circular steel cages. Elliptical steel cages or quadrant steel cages shall not be allowed. Reinforcing steel shall be positioned in accordance with the clearances specified in ASTM C76. Clearance shall be provided for the full length of the pipe from bell end to spigot end of the pipe. Steel positioning shall not vary within the forms more than +/-10% of the wall thickness or +/-one-half (1/2)-inch, whichever is greater.

E. Variations of the internal diameter of the pipe shall comply with paragraph 12.1 of ASTM C76. The planes of the ends of the pipe shall be perpendicular to the longitudinal axis of the pipe except as specified for beveled end pipe (special pieces below). The ends of the pipe shall be of such a design that the pipe, when laid, shall form a continuous conduit with smooth and uniform interior surface. Minor repairs to the pipe are allowed as outlined in accordance with ASTM C76. Minor repairs made at the point of manufacture or in the field shall be filled with a permanent non-shrinking patching compound. Mortar patching compound shall be similar and equal to Embeco 167 Mortar as manufactured by Master Builders, Thoropatch as manufactured by Thoroseal Products, or approved equal. The Engineer or QCast Inspector shall inspect the lengths of pipe before they are shipped to the project site and shall require

the manufacturer to apply the mortar as directed. No mortar shall be applied without prior approval of the Engineer or QCast Inspector.

F. A record of pipe supplied for the project shall be furnished to the Engineer by the manufacturer. All pipe shipped to the site of the Work shall be clearly marked as to type, date of manufacture, and name or trademark of manufacturer. The historical record of pipe supplied shall be in a form approved by the Engineer and shall contain: class, date of manufacture, dates of inspection, date of shipment, and dates and results of compressive tests on cylinders and cores.

G. The Contractor shall not unload the pipe from trucks at the site of the Work in a manner that might damage the pipe. The method used to unload the pipe shall be subject to the approval of the Engineer. It shall be the responsibility of the Contractor to assure that the pipe is manufactured, loaded, transported, unloaded, stored, and installed in a manner which does not result in damage to the pipe.

H. The Engineer, in accepting the pipe, does not imply that the pipe is acceptable for its intended use. The Engineer reserves the right to reject any and all pipe until it meets all the requirements of these specifications.

2.03 SPECIAL PIECES

A. Special pieces of pipe such as bends shall be manufactured from cut lengths of straight pipe, and shall have carry-over reinforcement across adjoining planes of a design approved by the Engineer.

B. Manhole pieces shall be manufactured in accordance with the details shown the Drawings or as specified on the Detail Drawings.

2.04 JOINTS

A. All joints and gaskets shall meet the requirements of ASTM C443.

2.05 SPECIAL DESIGN PIPE

A. Special designs of reinforced concrete pipe shall be in accordance with the requirements of ASTM C76 Section 7.2 - modified or special designs.

B. The pipe manufacturer shall not manufacture reinforced concrete pipe, test pipe, or produce pipe until approval has been obtained from the Engineer in writing. The manufacture of pipe shall have concrete cover over the inside steel cage and cover over the outside steel cage, in accordance to ASTM C76 standards, shall provide two complete circular mats of steel, and shall provide the strengths of steel as specified in this section. Pipe shall be designed per applicable sections of ASTM C76.

C. The pipe manufacturer shall be required upon receiving the order from the Contractor to submit to the Engineer for the Engineer's review and approval, the design for the classes of pipe to be manufactured. The design shall include drawings to be submitted for stamped approval. The stamped approval drawings shall be furnished to the Engineer for use during the manufacturing of the pipe. Manufacturing drawings shall be required for each pipe size and pipe class. The drawings shall be working drawings to reflect sizes of steel (circumferential, longitudinal, spacer, and stirrups steel) as well as steel placement.

D. Submission of certified three-edge-bearing tests already made, which are acceptable to the Engineer, may be considered as verification of Special Design in lieu of D-Load tests.

E. The Engineer may select at random two full length joints of each class or size of pipe to be tested to D-loads that would produce applicable (ASTM C76) cracking. Tests shall be in accordance with applicable sections of ASTM C76 or as amended in this section. The test shall be performed in the presence of the Engineer or QCast inspector.

PART 3 EXECUTION

3.01 LAYING CONCRETE PIPE

A. Excavation for the pipe and preparation of the trench bottom, including bedding to receive the pipe, shall be done in accordance with the requirements of Section 02225, Trench Excavation and Backfill. In the preparation of the pipe bedding, the Contractor shall take into consideration any variation in thickness of the pipe wall, and the bed must be prepared to suit the particular piece of pipe to be lowered into place. Preparation of the compacted bed shall be such that when the pipe is lowered in place and pulled to secure full compressive pack of the rubber joint ring, a smooth and uniform flow line on the specified grades will be secured. An interior inspection of the sewer will be made after sufficient time has elapsed for the backfill to attain its settlement in the trench.

B. The pipe interior and joints shall be clean when lowered in the trench and shall be kept clean thereafter. The exposed ends of pipe in the trench shall be closed by suitable bulkheads at all times when pipe laying is not in progress. Each section of pipe shall be securely anchored in place before the next adjoining pipe is laid and the joint between the sections is made.

C. No tools or equipment shall be used in the laying of the pipe that will damage the pipe. The trenching equipment shall not be used to force a joint of pipe into its proper position on grade by application of pressure on top of the pipe along its partial or full length. All pipe joints shall be brought home by use of properly designed equipment for the specific purpose as

approved by the Engineer. Pipe lengths that have received damage to wall, spigot, or socket shall be replaced or repaired to the satisfaction of the Engineer. Such replacement or repair shall be at the Contractor's expense.

D. The Contractor must secure the following results with the pipe and joint used:

1. A tight joint with gasket fully compressed and joint openings completely filled.

2. Pipeline shall have a smooth and uniform interior section free from cracks, pits, voids, or crazing as defined in Sections 13 and 15 of ASTM C76. Longitudinal and transverse cracks with a width less than 0.01-inch shall be considered hairline and minor. Seal longitudinal and transverse cracks having a width equal to or greater than 0.01-inch and less than 0.10-inch if there is displacement across the crack and the soil pH is less than 5.5. Replace pipes having longitudinal and transverse cracks greater than 0.10-inch.

E. Backfilling shall be in accordance with the requirements of Section 02225, Trench Excavation and Backfill.

3.02 CLEANING

A. At the conclusion of the work, the Contractor shall clean all pipe by flushing with water or other means to remove all dirt, stone wood or other materials which may have entered the pipe during construction.

3.03 CLEANUP

A. After completing each section of storm drain, the Contractor shall remove all debris and construction materials and equipment from the site of the Work; grade and smooth over the surface on both sides of the line; and leave the entire construction area in a clean, neat, and serviceable condition. The Contractor shall restore the site of the Work to the original or better condition.

+ + + END OF SECTION 02535 + + +

SECTION 02538

SEWER SERVICE CONNECTIONS

PART 1 GENERAL

1.01 SCOPE

A. The work covered by this section includes furnishing and installing new house service connections to existing and new main line sewers of the size and type shown on the Drawings and as specified herein.

B. The work covered under this section also includes disconnecting and removing existing service connections from the existing sewers and furnishing and installing new service connections to the existing and new sanitary sewers, all as shown on the Drawings or as directed by the Engineer and as specified herein.

C. Service connections shall be terminated at the edge of the existing right-of-way or easement or connected to existing laterals as necessary as directed by the Engineer.

D. Existing sewer service connections shall be located by CCTV as specified in Section 02655, Sewer System Cleaning and Television Inspection.

1.02 SUBMITTALS

A. Submittals shall be made in accordance with the requirements of the General Conditions of the Contract Documents. In addition, the following specific information shall be provided:

1. Product data for each pipe product, fitting, coupling and adapter.

2. Record Drawings showing new and reconnected sewer services.

3. Work plans detailing sanitary sewer service connection, reconnection and repair methods.

4. Record drawings showing location of replaced sewer service connections.

1.03 QUALITY ASSURANCE

A. Reference Standards: The Contractor shall comply with the applicable provisions and recommendations of the latest editions to the following standards, except as otherwise shown on the Drawings or specified herein.

1. ANSI/AWWA C111/ A21.11 - Rubber Gaskets Joints for Cast Iron and

Ductile Iron Pressure Pipe and Fittings.

2. ASTM A746 - Standard Specification for Ductile Iron Gravity Sewer Pipe.

3. ASTM C76 - Standard Specification for Reinforced Concrete Culvert, Storm Drain and Sewer Pipe.

4. ASTM C425 – Standard Specification for Compression Joints for Vitrified Clay Pipe and Fittings.

5. ASTM C700 - Standard Specification for Vitrified Clay Pipe, Extra Strength, Standard Strength, and Perforated.

6. ASTM C1173 – Standard Specification for Flexible Transition Couplings for Underground Piping Systems

6. ASTM D1784 - Standard Specification for Rigid Polyvinyl Chloride (PVC) Compounds and Chlorinated Polyvinyl Chloride (CPVC) Compounds.

7. ASTM D1785 - Standard Specification for Polyvinyl Chloride (PVC) Plastic Pipe, Schedule 40, 80, and 120.

8. ASTM D3034 - Standard Specification for Type PSM Polyvinyl Chloride (PVC) Sewer Pipe and Fittings.

9. ASTM D3212 - Standard Specification for Joints for Drain and Sewer Plastic Pipes Using Flexible Elastomeric Seals.

PART 2 PRODUCTS

2.01 MATERIALS

A. All materials for sewer service connections shall be pre-approved by the Engineer.

B. Vitrified Clay Pipe: Pipe and fittings for sewer service connections to main line sewer shall be as specified in Section 02540, Vitrified Clay Pipe.

C. Ductile Iron Pipe: Pipe and fittings for sewer service connections shall be as specified in Section 02537, Ductile Iron Sanitary Sewer Pipe.

D. Polyvinyl Chloride (PVC) Pipe: Pipe and fittings for sewer service connections

shall be as specified in Section 02545, Polyvinyl Chloride Gravity Sewer Pipe.

E. Sewer saddles shall be ductile iron conforming to ASTM A536, grade 65-45-12, with adjustable, type 304 stainless steel straps. Nuts, bolts and washers shall be type 304 stainless steel. Gasket shall be SBR per ASTM D2000 suitable for sewer service. Sewer saddle shall be equal to CB sewer saddle as manufactured by Romac Industries, Inc.

F. Sleeved stainless steel flexible couplings shall be used to connect pipes of dissimilar materials up to a maximum of 15-inches in diameter. Couplings shall conform to ASTM C425 and shall be equal to those manufactured by Fernco Inc., DFW Plastics, Inc., or Mission Rubber Company.

PART 3 EXECUTION

3.01 PROTECTION

A. The Contractor shall control traffic in accordance with the requirements of Section 01550, Traffic Regulation.

B. The Contractor shall not allow sand, debris, or runoff to enter sewer system.

C. The Contractor shall ensure that wastewater does not backup into private property. The Contractor shall establish a plan to prevent sewer backups when reconnections are not accomplished in a timely manner.

D. The Contractor shall provide for diversion of wastewater if necessary, in accordance with the requirements of Section 02600, Wastewater Flow Control.

E. The Contractor shall be responsible for all damage to property due to his work.

3.02 PREPARATION

A. The Contractor shall coordinate with property owners whose sanitary sewer service will be interrupted in accordance with the requirements of Section 01351, Public Relations and Communications.

B. The Contractor shall reconnect service connections, including those that go to unoccupied or abandoned buildings, unless directed otherwise by the Engineer.

3.03 SERVICE CONNECTIONS

A. All existing, new and proposed sewer service connections shall be identified prior to pipe installation or replacement. A complete list of service connections including

footage and diameter of each service connection along with station of mainline sewer service connection point shall be submitted prior to pipe installation or replacement to the Engineer for information.

3.04 REMOVAL OF EXISTING SEWER CONNECTION

A. Existing service connection pipe shall be removed or abandoned as necessary to allow for new sewer installation.

B. Pipe removed shall be immediately removed from the work site by the Contractor. Pipe shall not be removed until sufficient replacement pipe is on site and available for installation.

C. The Contractor shall plug the open ends of all abandoned service lines using concrete conforming to the requirements of Section 03300, Cast-In-Place Concrete.

3.05 CONNECTIONS TO NEW SANITARY SEWERS

A. Location of service connections shall be approved by the Engineer

B. Connection of service lines or risers to sewer lines less than or equal to twelve (12) inches in diameter shall be by means of standard tees or wyes, or as indicated on the Drawings. Connection of service lines or risers to sewer lines larger than twelve (12) inches in diameter shall be accomplished by tapping saddle or as shown on the Drawings.

C. The Contractor shall make up the connection between the new main and the existing service line using sewer pipe and fittings conforming to the requirements of paragraph 2.01 of this Section and as shown on the Drawings.

D. Service connections shall be made at the top or from the side at forty-five (45) degrees of the sewer line using same diameter pipe as currently connected to the sewer, minimum six (6) inches, as shown on the Drawings, or as directed by the Engineer.

E. The Contractor shall test new service connections before backfilling.

3.06 CONNECTIONS TO EXISTING SANITARY SEWERS

A. After installation or replacement of mainline sewer is completed, but prior to service reconnects, perform a CCTV inspection of all existing service connections to the edge of right-of-way (ROW) or edge of easement. The inspection shall be performed in the presence of the Engineer. If the Engineer determines that a

sewer connection requires replacement, the service connection shall be replaced complete from the mainline sewer to the edge of ROW or edge of easement.

B. All service connections shall be made by core drilling a circular hole through the wall of the existing pipe. The hole size shall be equal to the inside diameter of the connecting pipe, free of burrs or rough edges and perpendicular to the existing pipe. Installation of the saddle assembly shall be in accordance with the saddle manufacturer's recommendations and provide a watertight seal. Pipe branch connection products shall correspond to the sewer main pipe material as indicated below:

Sewer Main Material	**Branch Connection Product**
Ductile Iron ***	Sewer saddle equal to CB Sewer Saddle
Concrete	Sewer saddle equal to CB Sewer Saddle
Vitrified Clay ***	Sewer saddle equal to CB Sewer Saddle
PVC ***	Flexible type saddle equal to Fernco Flexible Tap Saddle.

*** Wye or Tee fittings shall be used in lieu of the products indicated above if the sewer main piping is installed or using open cut trench methods.

C. Connections to the existing sewer house connection pipe shall be made using sleeved stainless steel flexible couplings.

D. In the event a lined pipe is encountered, the host pipe (outer) pipe material shall be used to determine the branch connection product as indicated above.

3.07 INSTALLATION

A. Minimum slope for service lines shall be two percent (2%), unless the existing service connection is at a lower slope, in which instance the Contractor shall lay the service lateral at the existing slope.

B. The Contractor shall install wyes or tees in locations shown on the Drawings or as designated by the Engineer for future connection of service connections or connection to live existing services. The Contractor shall plug the branch of the wye or tee until service connections are installed. The Contractor shall record the location of fittings installed on the Record Drawings.

C. Service connections to be extended from main sewers where the property being served does not require the full depth, may be brought up to grade with a riser pipe as shown on the profiles on the Drawings.

D. Service connections from main sewers will be extended on a straight uniform grade from the main point to the terminus. Connections shall not exceed a depth of twelve (12) feet below finished grade at the end of the connection at the right-of-way or easement line unless specifically authorized by the City.

E. Service Connections Crossing Pavement: Service connections may be installed by open trench if permitted by the City, Fulton County, or the Georgia Department of Transportation, where applicable based on the location of the Work. Installation of service connections by the open trench method shall meet the requirements of Section 02225, Trench Excavation and Backfill. If an open trench is not permitted, service connections shall be installed by jack and bore in accordance with the requirements of Section 02224, Jack and Bore or Tunnel Installations.

F. If the service connection ends in rock, the Contractor shall excavate the rock an additional three (3) feet beyond the plugged end.

G. All sewer service connections shall be provided with a cleanout at the easement or right-of-way line. Cleanouts shall be installed as shown on the Drawings.

3.08 UTILITY SERVICE REPAIRS

A. Where utility service connections to the user's premises are disconnected, broken, damaged, or otherwise rendered inoperable by the Contractor for any reason, the Contractor shall, at its own expense, arrange with the respective utility company for any repairs of lines under their jurisdiction, or for any lines not within their jurisdiction or the Contractor shall repair or replace same and restore service to the premises.

3.09 TESTING

A. Following completion of gravity sanitary sewer and reconnecting service connections, the Contractor shall perform CCTV, smoke testing or other testing method approved by the Engineer to confirm that all service connections are reconnected.

3.10 CLEANUP

A. The Contractor shall replace pavements, curbs and gutters, driveways, or sidewalks removed or damaged by excavation in accordance with the requirements of the applicable sections of these specifications and the standard details shown on the Drawings.

B. In unpaved areas, the Contractor shall bring the surface to grade and slope

surrounding the excavation. The Contractor shall replace a minimum of four (4) inches of topsoil and seed according to the requirements of Section 02920, Site Restoration.

+ + + END OF SECTION 02538 + + +

SECTION 02575

Removing and Replacing Pavement

PART 1 – GENERAL

1.01 SCOPE

A. The work to be performed under this Section shall consist of removing and replacing existing pavement, sidewalks, steps, patios, curbs, and gutters in paved areas where such have been removed for construction of utilities and appurtenances.

B. Existing pavement, sidewalks, curbs, and gutters shall be replaced to meet the current City of Atlanta standards, or to match existing pavement sidewalk, curb, or gutters; whichever is more stringent.

1.02 SUBMITTALS

A. If required by the City or Engineer, provide certificates stating that materials supplied comply with Specifications. Certificates shall be signed by the asphalt producer and the Contractor.

1.03 CONDITIONS

A. Weather Limitations:

1. Apply bituminous tack coat only when the ambient temperature in the shade has been at least 50 degrees F for 12 hours immediately prior to application.

2. Do not conduct paving operations when surface is wet or contains excess of moisture that would prevent uniform distribution and required penetration.

3. Construct asphaltic courses only when atmospheric temperature in the shade is above 40 degrees F, when the underlying base is dry and when weather is not rainy.

4. Place base course when air temperature is above 35 degrees F and rising.

B. Grade Control: Establish and maintain the required lines and grades for each course during construction operations.

PART 2 – PRODUCTS

2.01 MATERIALS AND CONSTRUCTION

A. Graded Aggregate Base: The sub-base shall be a minimum of 6-inches thick and a width equal to the width of the finished paving. Aggregate base shall be Class A, meeting the requirements of the Georgia Department of Transportation Specification Section 815.01. Compact to at least 95% Standard Proctor Density. (ASTM D-698)

B. Base: The base for all ashphaltic paved roadways shall conform to the requirements of the Georgia Department of Transportation Specifications for the Hot Mix Asphaltic Concrete Section 828, 19 mm Superpave mix design.

C. Tack Coat: Tack coat shall conform to Section 413 of the Georgia Department of Transportation Standard Specifications.

D. Surface Course: The surface course for all asphaltic pavement, including paint or tack coat when required by the Engineer, shall conform to the requirements of the Georgia Department of Transportation Specifications for Hot Mix Asphaltic Concrete, Section 828, 9.5mm Superpave, Level C mix design.

E. Concrete: Provide concrete and reinforcing for concrete pavement or base courses in accordance with the requirements of the Georgia Department of Transportation Standard Specifications, Section 430. Concrete shall be minimum 3,000 psi compressive strength or as otherwise shown on the Drawings.

F. Special Surfaces: Where pavement, sidewalks, steps, patios, curbs, or gutters are disturbed or damaged which are constructed of specialty type surfaces, e.g., brick or stone, these facilities shall be restored utilizing similar, if not original, materials. Where the nature of these surfaces dictate, a specialty contractor shall be used to restore the surfaces to their previous or better condition. Special surfaces shall be removed and replaced to the limits to which they were disturbed.

2.02 TYPES OF PAVEMENTS

A. General: All existing pavement removed, destroyed or damaged by construction shall be replaced with the same type and thickness of pavement as that existed prior to construction, unless otherwise directed by the Engineer. Materials, equipment and construction methods used for paving work shall conform to the Georgia Department of Transportation specifications applicable to the particular type required for replacement, repair, or new pavements.

B. Aggregate Base: Aggregate base shall be constructed in accordance with the requirements of the Georgia Department of Transportation Standard Specifications. The maximum thickness to be laid in a single course shall be 6-inches compacted. If the design thickness of the base is more than 6-inches, it shall be constructed in two or more courses of approximate equal thickness. After the material placed has been shaped to line, grade, and cross-section, it shall be rolled until the course has been uniformly compacted to at least 100 percent of the maximum dry density when Group 2 aggregate is used, or to at least 98 percent of maximum dry density when Group 1 aggregate is used.

C. Concrete Pavement: Concrete pavement or base courses shall be replaced with concrete. The surface finish, joint pattern and joint sealant of the replaced concrete pavement shall conform to that of the existing pavement. The surface of the replaced concrete base course shall be left rough. The slab depth shall be equivalent to the existing concrete pavement or base course, but in no case less than 6-inches thick. Transverse and longitudinal joints removed from concrete pavement shall be replaced at the same locations and to the same types and dimensions as those removed. Concrete pavements or concrete base courses shall be reinforced.

D. Asphaltic Concrete Base, Bituminous Tack Coat, and Surface Course: Asphaltic concrete base, tack coat, and surface course construction shall conform to Georgia Department of Transportation Standard Specifications. The pavement mixture shall not be spread until the designated surface has been previously cleaned and prepared; surface is intact, firm, properly cured, dry and the tack coat has been applied. Apply and compact the base in maximum layer thickness by asphalt spreader equipment of design and operation approved by the Engineer. After compaction, the black base shall be smooth and true to established profiles and sections. Apply and compact the surface course in a manner approved by the Engineer. Immediately correct any high, low, or defective areas by cutting out the course, replacing with fresh hot mix, and immediately compacting to conform and thoroughly bond to the surrounding area.

E. Surface Treatment Pavement: Bituminous penetration surface treatment pavement shall be replaced with the thickness indicated on the Drawings.

F. Gravel Surfaces: Existing gravel road, drive, and parking area replacement shall meet the requirements of graded aggregate base course. This surfacing may be authorized by the Engineer as a temporary surface for paved streets until replacement of hard surfaced pavement is authorized.

G. Temporary Measures: During the period between pavement removal and complete replacement of permanent pavement, maintain highways, streets, and roadways by the use of steel running plates anchored to prevent movement. The backfill above the pipe shall be compacted, as specified in

Section 02200 of these Specifications, up to the existing pavement surface to provide support for the steel running plates. All pavements shall be replaced within seven calendar days of their removal.

PART 3 – EXECUTION

3.01 LOCATIONS FOR PAVEMENT REPLACEMENT

A. Pavement Replacement:

1. All trenches for roadway crossings

2. All trench longitudinal installations

3. All locations where pavement must be removed or is damaged in the execution of the Work

B. "Graded Aggregate" pavement repair shall be used only where approved by the Engineer.

3.02 REMOVING PAVEMENT

A. General: Remove existing pavement as necessary for installing the pipeline and appurtenances. Existing pavement and sub-base shall be removed for trench construction and pipe installation.

B. Remove and replace pavement and base beyond pipeline trench to outer edge of existing pavement or roadway if remaining existing pavement width is 24-inches or less from side of trench to outer edge of pavement or roadway.

C. Marking: Before removing any pavement, mark the pavement neatly paralleling pipelines and existing street lines.

D. Saw Cutting: Under no circumstances shall the Contractor be allowed to remove concrete or asphalt without prior saw cutting. Asphalt pavement shall be saw cut along the marks using suitable equipment. The saw cutting shall be deep enough to produce an even, straight cut.

E. Machine Pulling: Do not pull pavement with machines until the pavement is completely broken and separated from pavement to remain.

F. Damage to Adjacent Pavement: Do not disturb or damage the adjacent pavement. If the adjacent pavement is disturbed or damaged, remove and replace the damaged pavement.

G. Sidewalks and Patios: Remove and replace any sidewalks or patios disturbed by construction for their full width and to the nearest undisturbed joint.

H. Curbs and Gutters: Tunnel under or remove and replace any curb and/or gutter, which is disturbed by construction to the nearest undisturbed joint.

I. Steps: Completely remove and replace any steps, constructed of concrete or special surfaces, which are disturbed by construction.

3.03 REPLACING PAVEMENT

A. Preparation of Subgrade: Upon completion of backfilling and compaction of the backfill, arrange to have the compaction tested by an independent testing laboratory approved by the Engineer. Testing shall be paid for separately by the City directly to the testing laboratory. After compaction testing has been satisfactorily completed, replace all pavements, sidewalks, and curbs removed.

1. The existing street pavement or surface shall be removed or milled along the lines of the work from edge of pavement to edge of pavement. Pavement shall be replaced from edge of existing pavement to edge of existing pavement.

2. Trench backfill shall be compacted for the full depth of the trench as specified in Section 02200 of these Specifications.

3. Temporary trench backfill along streets and driveways shall include 6-inches of crushed stone or cherty clay as a temporary surfacing of the trenches. This temporary surface shall be maintained carefully at grade, dust-free, by the Contractor until the backfill of the trench has thoroughly compacted in the opinion of the Engineer, and permission is granted to replace the street pavement.

4. When temporary crushed stone or chert surface is considered by the Engineer to be sufficient surface for gravel pavement, the surface shall be graded smooth and to an elevation that will make the final permanent surfacing level with the adjacent surfacing that was undisturbed.

B. Pavement Replacement:

1. Replace and repave all street and roadway pavement from edge of pavement to edge of pavement as shown on the Exhibit “A” Detail G-7, Type III Pavement Replacement Detail or Exhibit “B” GDOT Construction Detail 1401 as directed by the Engineer. Concrete unless otherwise directed by the Engineer. Replace driveways,

sidewalks, and curbs with the same material, to nearest existing undisturbed construction joint and to the same dimensions as those existing.

2. If the temporary crushed stone or chert surface is to be replaced, the top 6-inches shall be removed and the crushed stone surfacing for unpaved streets or the base for the bituminous surface shall be placed.

3. Following this preparation, the chert or crushed stone base shall be primed with a suitable bituminous material and surfaced with the proper type of bituminous surface treatment.

4. Where the paved surface is to be replaced with asphaltic concrete pavement, concrete pavement or with a concrete base and a surface course, the temporary chert or crushed stone surface and any necessary backfill material, additional existing paving and new excavation shall be removed to the depth and width shown on the Drawings. All edges of the existing pavement shall be cut to a straight, vertical edge. Care shall be used to get a smooth joint between the old and new pavement and to produce an even surface on the completed street. Concrete base slabs and crushed stone bases, if required, shall be placed and allowed to cure for three days before bituminous concrete surface courses are applied. Expansion joints, where applicable, shall be replaced in a manner equal to the original joint.

5. Where driveways or roadways, constructed of specialty type surfaces, e.g., brick or stone are disturbed or damaged, these driveways and roadways shall be restored utilizing similar materials. Where the nature of these surfaces dictate, a specialty contractor shall be used to restore the surfaces to their previous or better condition. Special surfaces shall be removed and replaced to the limits to which they were disturbed.

C. Pavement Resurfacing:

1. After all pipe line installations are complete and existing pavement has been removed or milled from edge of pavement to edge of pavement, apply tack coat and surface course as specified.

2. Resurfacing limits shall be perpendicular to the road centerline. The limits of resurfacing shall be 10 feet beyond the edge of the pavement replacement on the main road being resurfaced.

3. Where pavement damaged with potholes, the Contractor shall remove all existing loose pavement material and fill the hole with black base, as specified, to the level of the existing pavement.

D. Pavement Striping: Pavement striping removed or paved over shall be replaced with the same type, dimension, and material as original unless directed otherwise by the Engineer.

E. Installation of Traffic Plates: Following completion of sewer works including backfilling but prior to replacement of pavement, steel plates shall be used to temporarily carry vehicular traffic as follows:

1. All Steel plates shall meet ASTM structural specifications having "A36" designation with minimum yield stress of 36 ksi (ksi = kilopounds per square inch).

2. Asphaltic patching material (cold mix) shall be used to secure the steel plate around its edges. Alternatively, all sides of the plate or plates must be secured to the ground surface with A.R.E.A. standard railroad spikes. No spikes shall be left lying on the highway.

3. Trench must be backfilled to within eight (8) inches from top of existing pavement prior to placing the steel plate.

4. No plate is allowed over a trench having a width greater than 48 inches when adequate soil conditions are present. When the trench is greater than 48 inches, the entire lane containing the trench shall be closed. Before closing a lane, a "Lane Closure Permit" must be obtained from the City of Atlanta, Department of Public Works, Bureau of Traffic and Transportation. At least 24 hours prior notification is required for the "Lane Closure Permit".

5. All necessary warning signs, barricades, and lights shall be adequately provided and placed for the safety of the public and in full conformity with the latest edition of the MUTCD at no additional cost to the City. Before closing a "Lane Closure Permit" must be obtained from the City of Atlanta. The Department of Public Works, Bureau of Traffic and Transportation must be notified at least 24 hours in advance.

6. The width of a trench is measured normal to the length of the trench. The largest reading of the measurements is the determining factor for width. For a series of steel plates on any continuous trench, all plates must have the same thickness.

7. Trench must be fully covered with a minimum of twelve (12) inches of asphalt taper on all sides of the plate.

8. Upon the completion of the work, the existing surface shall be cleaned and pavement restored to the City of Atlanta standards.

3.04 SIDEWALK, CURB, AND GUTTER REPLACEMENT

A. Construction:

1. All damaged concrete sidewalks, curbs, or gutters shall be replaced.

2. See Section 02530 for concrete walk construction.

3. See Section 02532 for concrete curb and gutter construction.

4. When a section is removed, the existing sidewalk, curb, or gutter shall be cut to a neat line, perpendicular to both the centerline and the surface of the concrete slab. Existing concrete shall be cut along the nearest existing construction joints; if such joints do not exist, the cut shall be made at minimum distances shown on the Drawings.

5. Existing concrete sidewalks, curbs, and gutters that have been cut and removed for construction purposes shall be replaced with the same width and surface as the portion removed. Sidewalks shall have a minimum uniform thickness of 4-inches. The new work shall be neatly jointed to the existing concrete so that the surface of the new work shall form an even, unbroken plane with the existing surfaces.

6. The subgrade shall be formed by excavating to a depth equal to the thickness of the concrete, plus 2-inches. Subgrade shall be of such width as to permit the proper installation and bracing of the forms. Subgrades shall be compacted by hand tamping or rolling. Soft, yielding or unstable material shall be removed and backfilled with satisfactory material. Place 2-inches of porous crushed stone under all sidewalks, curbs, and gutters and compact thoroughly, then finish to a smooth, unyielding surface at proper line, grade, and cross-section.

B. Joint for Curbs and Gutters:

1. Joints shall be constructed to match existing and as specified in Section 02532.

2. Expansion joints shall be required to replace any removed expansion joints or in new construction. Expansion joints shall be true and even, shall present a satisfactory appearance, and shall extend to within 1/2-inch of the top of finished concrete surface.

C. Finishing:

1. Strike off the surface with a template and finish the surface with a wood float using heavy pressure, after which, contraction joints shall be made and the surface finished with a wood float or steel trowel.

2. Finish the face of the curbs at the top and bottom with an approved finishing tool of the radius indicated on the Drawings.

3. Finish edges with an approved finishing tool having a 1/4-inch radius.

4. Provide a final broom finish by lightly combing with a stiff broom after troweling is complete.

5. The finished surface shall not vary more than 1/8-inch in 10 feet from the established grade.

D. Driveway and Sidewalk Ramp Openings:

1. Provide driveway openings of the widths and at the locations directed by the Engineer.

2. Provide sidewalk ramp openings in conformance with the applicable regulations and as directed by the Engineer.

3. Concrete shall be suitably protected from freezing and excessive heat. It shall be kept covered with burlap or other suitable material and kept wet until cured. Provide necessary barricades to protect the work. All damage caused by people, vehicles, animals, rain, the Contractor's operations and the like shall be repaired by the Contractor, at no additional expense to the City.

3.05 MAINTENANCE

A. The Contractor shall maintain the surfaces of roadways built and pavements replaced until the acceptance of the Project. Maintenance shall include replacement, scraping, reshaping, wetting, and re-rolling as necessary to prevent raveling of the road material, the preservation of reasonably smooth surfaces and the repair of damaged or unsatisfactory surfaces, to the satisfaction of the Engineer. Maintenance shall include sprinkling as may be necessary to abate dust from the gravel surfaces.

3.06 SUPERVISION AND APPROVAL

A. Pavement restoration shall meet the requirements of the regulatory agency responsible for the pavement. Obtain agency approval of pavement restorations before requesting final payment.

B. Obtain the Engineer's approval of restoration of pavement, such as private roads and drives that are not the responsibility of a regulatory agency.

C. Complete pavement restoration as soon as possible after backfilling.

D. Failure of Pavement: Should any pavement restoration or repairs fail or settle during the life of the Contract, including the bonded period, promptly restore or repair defects.

E. Prior to acceptance and approval of any asphaltic concrete binder and/or topping which is installed for the purpose of City maintenance, a representative of the City of Atlanta's Department of Traffic and Transportation may require one or all of the following tests: 1) coring, 2) extraction, 3) compaction, 4) density. The frequency and location of these tests will be left up to the discretion of the Inspector/Engineer. Testing shall be paid for separately by the City directly to the testing laboratory.

3.07 CLEANING

A. The Contractor shall remove all surplus excavation materials and debris from the street surfaces and rights-of-way and shall restore street, roadway, or sidewalk surfacing to its original condition.

3.08 TRAFFIC CONTROL

A. Refer to Specification Section 01500: Temporary Control of Construction Operations for requirements.

ATTACHMENT A

STANDARD DETAILS

Exhibit A

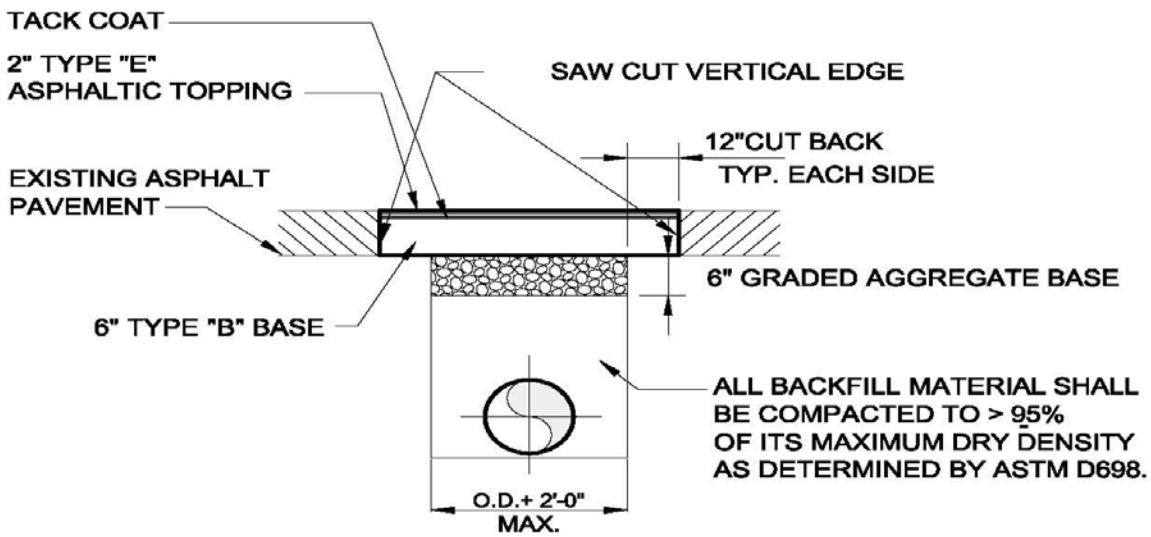

ASPHALT PAVEMENT

NOTE: PAVEMENT REPLACEMENT SHALL BE INSTALLED IN ACCORDANCE WITH GEORGIA DOT STANDARD SPECIFICATIONS

U:\2002 Std Sewer Details\FINISHED\G-7 GTO01P08.dwg 12/6/2004 2:13:52 PM EST

City of Atlanta Department of Public Works	STANDARD DETAILS	
	TYPE III PAVEMENT REPLACEMENT	DATE : NOV 2004 SCALE : NONE DETAIL NO. G-7

U:\2002 Std Sewer Details\FINISHED\G-7 GTO01P08.dwg, 12/8/2004 2:17:43 PM, CutePDF Printer

Exhibit B

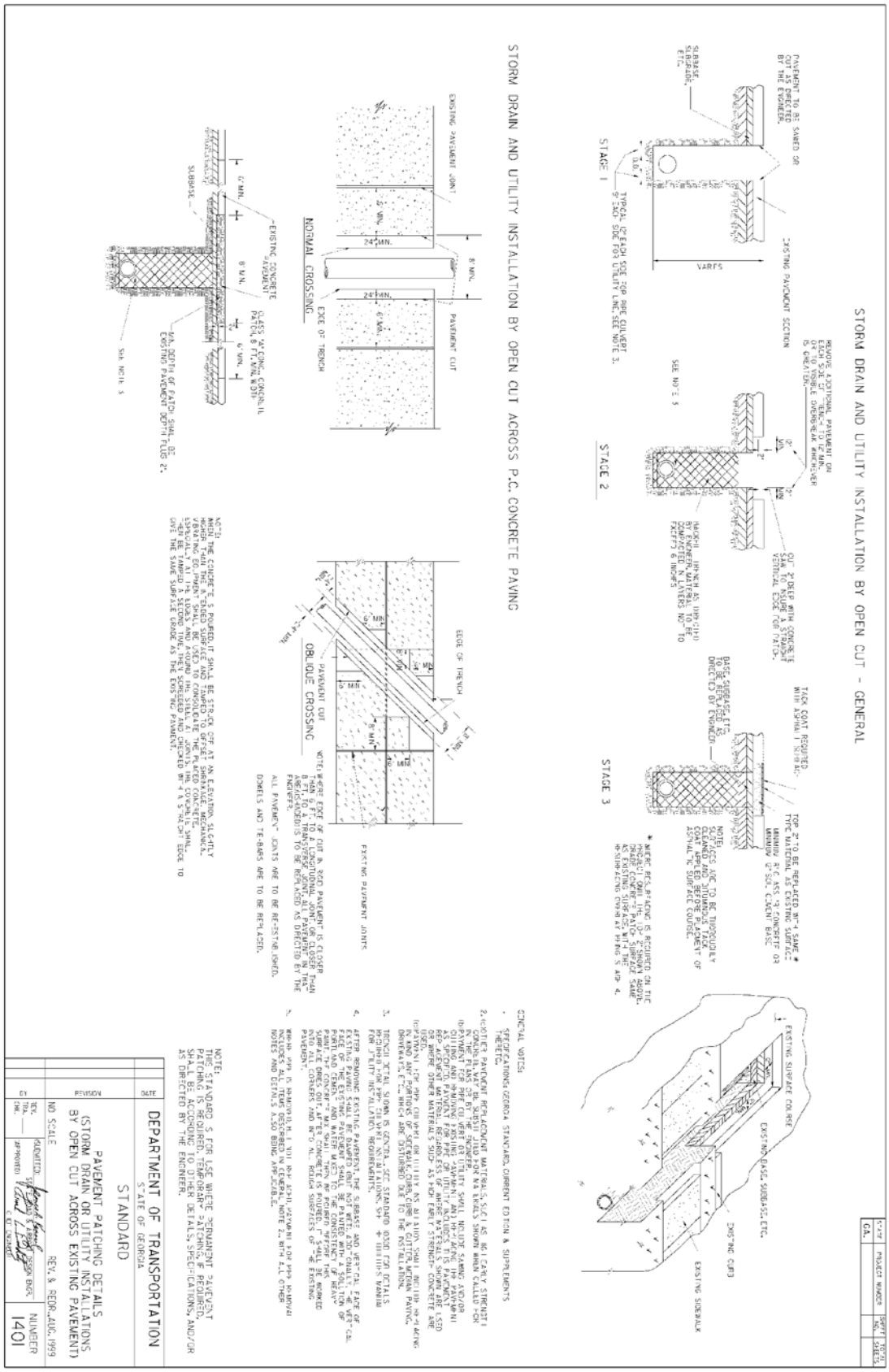

END OF SECTION

SECTION 02601

WASTEWATER FLOW CONTROL

PART 1 – GENERAL

1.01 SCOPE

A. The objective of flow bypass and/or diversion pumping is to:

1. Maintain an efficient and uninterrupted level of service to wastewater collection system users while maintenance or construction operations (including rehabilitation, repair or replacement) are facilitated on the segment or segments being bypassed and/or from which flow is being diverted, within the wastewater collection system

2. Ensure all levels of sewage flow are continuously and effectively handled around the segment or segments of sewer being bypassed and/or from which flow is being diverted by:

   a. Ensuring that bypass and diversion pumps are adequately fueled, lubricated and maintained

   b. Ensuring backup spare parts are expeditiously applied to the flow bypass and/or diversion pumping system in the event of component breakdown

   c. Ensure an emergency backup plan is smoothly implemented in the event of system failure

   d. Preventing backup, spillage, flooding or overflow onto streets, yards and unpaved areas or into buildings, adjacent ditches, storm sewers, and waterways, while flow bypass or diversion pumping takes place and ensure that installation, startup and subsequent disassembly of the flow bypass and diversion pumping system is smoothly transitioned

B. When pumps are operating, an experienced bypass/diversion pump maintenance operator/mechanic and/or assistant shall continuously be on site to monitor the operation of the entire bypass/diversion system. The operator/mechanic and/or assistant shall comprehensively, methodically and continuously:

1. Adjust pump speed as appropriate so as not to adversely impact upstream or downstream flow condition levels

2. Check that the effectiveness and security of bulkheads, dams, diaphragms, plugs, valves, weirs, and all other flow control devices are working effectively and according to plan

3. Check the integrity of hoses and couplings along the entire bypass/diversion system

4. Monitor fuel tanks and refuel as necessary

5. Monitor lubrication levels and provide additional lubrication as

6. Facilitate minor repairs as required

7. Report on potential problems arising

8. Inspect bypass-pumping system at least hourly to ensure that the system is working correctly.

9. Maintain adequate supply of spare parts on site as required.

C. Bypass pumping systems shall include a sufficient amount discharge piping, bends and accessories to accommodate site conditions with minimal disruption and damage to the existing landscape.

1.02 SUBMITTALS

A. The design, installation, and operation of the temporary pumping system shall be the Contractor's responsibility. The Contractor shall employ the services of a vendor that can demonstrate to the Engineer that the vendor specializes in the design and operation of temporary bypass pumping systems. The vendor shall provide at least three (3) references of projects of a similar size and complexity as this project, which were successfully performed by the vendor's firm within the past three years. The reference shall include the name of the agency, the name of the project, the date of the project, and the agency contact (telephone, fax, and e-mail). The bypass system shall meet the requirements of all codes and regulatory agencies having jurisdiction. **(Submit at Pre-Construction Meeting)**

B. During the course of the project, the detailed, work-specific Bypass Pumping/Flow Diversion Plan for any bypass utilizing multiple pumps, or a single pump greater than 4" discharge, shall be submitted to the Engineer at least 10 days before required. This plan shall outline all provisions and precautions, to be taken by the Contractor, regarding the handling of existing wastewater flows. This plan must be specific and complete, including such items as schedules, locations, elevations, capacities of equipment, materials and all other incidental items necessary and/or

required to insure proper protection of the facilities. The Plan shall also include details of protection of the access and bypass pumping locations from damage due to the discharge flows, compliance with the requirements and permit conditions specified in these Contract Documents. No construction shall begin until all provisions and requirements have been reviewed and authorized by the Engineer.

C. The Contractor shall submit two copies of the Flow Bypass Pumping/Flow Diversion Plan, described in Item 1.02(B) above, for each sewer bypass set-up with sufficient detail to show:

1. Staging areas for pumps

2. Sewer plugging method and types of plugs

3. Number, size, material, location, and method of installation of suction piping

4. Bypass pump sizes, capacity, number of each size to be on site and power requirements

5. Calculations for selection of bypass pump size

6. Standby power generator size, location

7. Downstream discharge plan

8. Method of protecting discharge manholes or structures from erosion and damage

9. Thrust and restraint block sizes and locations

10. Sections showing suction and discharge pipe depth, embedment, select fill and special backfill where required

11. Method of noise control for each pump and/or generator

12. Any temporary pipe supports, including rollers and elevated rollers, as well as anchoring required

13. Design plans and computation for access to bypass pumping locations indicated on the drawings

14. Schedule for installation of and maintenance of bypass pumping lines

15. Plan indicating selection location of bypass pumping line locations

16. The Plan shall indicate the means by which flows from service laterals will be accommodated

D. All proposed flow control arrangements, including flow bypass and/or diversion pumping plans for sewers, shall also include an emergency response plan to be followed in the event of a failure of the bypass pumping and/or diversion system. Contractor's emergency response plan shall be in accordance with the City's Emergency Response Plan.

E. The Contractor shall notify the Engineer 24 hours prior to commencing actual flow bypass and/or diversion pumping operations. The Contractor flow control proposal shall be agreed to by the Engineer before the Contractor shall be allowed to commence sewerage bypass pumping and/or diversion.

1.03 RELATED SECTIONS

A. The Work of the following Sections apply to the Work of this Section. Other Sections of the Specifications, not referenced below, shall also apply to the extent required for proper performance of Work.

1. Section 02752: Internal Sewer Condition Assessment

2. Section 02511: Preconditioning and Cleaning Manholes and Sewers

3. Section 02757: Sanitary Sewer Point Repair

4. Section 02725: Pipebursting Method

5. Section 02491: Rehabilitation of Sanitary Sewer Manholes

1.04 RESPONSIBILITY FOR OVERFLOWS OR SPILLS

A. It shall be the responsibility of the Contractor to schedule and perform his work in a manner that does not cause or contribute to incidence of overflows or spills of sewage from the sewer system.

B. In the event of overflows caused by the Contractor’s work activities, the Contractor shall immediately take appropriate action in accordance with the City’s Emergency Response Plan (ERP), to contain and stop the oveverflow, clean up the spillage, disinfect the area affected by the spill, and notify the designated Engineer in a timely manner. The Contractor shall prepare his own written Standard Operating Procedure (SOP) for handling and reporting spills, which shall be compatible with the City’s ERP.

C. Contractor will indemnify and hold harmless the City for any fines or third-party claims for personal or property damage arising out of a spill or overflow that is fully or partially the responsibility of the Contractor, including the legal, engineering and administrative expenses of the City in defending such fines and claims.

PART 2 – PRODUCTS

2.01 PUMPING EQUIPMENT

A. All pumps used shall be fully automatic self-priming units that do not require the use of foot-valves or vacuum pumps in the priming system. The pumps may be electric or diesel powered. All pumps used must be constructed to allow dry running for long periods of time to accommodate the cyclical nature of effluent flows.

B. The Contractor shall provide the necessary stop/start controls for each pump.

C. The Contractor shall include one stand-by pump of each size to be maintained on site for each by pass set up unless otherwise agreed with the Engineer.

D. The Contractor shall design all piping, joints, and accessories to withstand twice the maximum system pressure or 50 psi, whichever is greater. The back-up pump, appropriate piping, fuel, lubrication and spare parts shall be incorporated into the bypass arrangement at the site, ready for use in case of breakdown. A bypass “drill” shall be carried out by the Engineer before the bypass arrangement is accepted on all sewers > 12” diameter, at no cost to the City. The drill shall demonstrate the incorporation of all standby equipment to handle flows when the main pump set is switched off. The Engineer’s instructions following the drill shall be adhered to in full at no additional cost to the City.

E. No more than two (2) pump discharge hoses shall be used for the bypass/diversion over the length of the line of segment(s). If the flow exceeds the capacity of 2 “hoses”, then rigid piping shall be used. The rigid piping shall consist of HDPE or steel pipes with suitably pressure rated couplings to withstand twice the maximum system pressure or 50 psi, whichever is greater.

F. Under no circumstances will aluminum “irrigation” type piping or glued PVC pipe by allowed. Discharge hose will only be allowed in short sections and by specific permission from the Engineer.

2.02 SYSTEM DESCRIPTION

A. Design Requirements:

1. Bypass pumping systems shall have sufficient capacity to pump a peak flow in the pipes that are being rehabilitated or repaired. The Contractor shall provide all pipeline plugs, pumps of adequate size to handle wet weather peak flows, and temporary discharge piping to ensure that the total flow of the main can be safely diverted around the section to be repaired. Bypass pumping system will be required to be operated 24 hours per day.

2. The Contractor shall have adequate standby equipment available and ready for immediate operation and use in the event of an emergency or breakdown. One standby pump for each size pump utilized shall be installed at the mainline flow bypassing locations, ready for use in the event of primary pump failure.

3. Bypass pumping system shall be capable of bypassing the flow around the work area and of releasing any amount of flow, up to full available flow, into the work area as necessary for satisfactory performances of work.

4. The Contractor shall make all arrangements for bypass pumping during the time when the main is shut down for any reason. System must overcome any existing force main pressure on discharge.

B. Performance Requirements:

1. It is essential to the operation of the existing sewerage system that there is no interruption in the flow of sewage throughout the duration of the project. To this end, the Contractor shall provide, maintain and operate all temporary facilities such as dams, plugs, pumping equipment (both primary and back-up units as required), conduits, all necessary power, and all other labor and equipment necessary to intercept the sewage flow before it reaches the point where it would interfere with his work, carry it past his work, and return it to the existing sewer downstream of his work.

2. The design, installation, and operation of the temporary pumping system shall be the Contractor's responsibility. The bypass system shall be the Contractor's responsibility. The bypass system shall meet the requirements of all codes and regulatory agencies having jurisdiction.

3. The Contractor shall provide all necessary means to safely convey the sewage past the work area. The contractor will not be

permitted to stop or impede the main flows under any circumstances.

4. The Contractor shall maintain sewer flow around the work area in a manner that will not cause surcharging of sewers, damage to sewers and that will protect public and private property from damage and flooding.

5. The Contractor shall protect water resources wetlands and other natural resources.

PART 3 – EXECUTION

3.01 PLANNING

A. The Contractor shall be solely responsible for planning and executing sewer flow control, bypass, and diversion pumping operations. The Contractor shall be entirely liable for damages to private or public property that may result from his operations and for all cleanup, disinfection, damages, and resultant fines in the event of a spillage, flooding or overflow.

3.02 GENERAL

A. If, during normal rehabilitation work on manholes and sewers, where flow control devices, including flow bypass and diversion pumping have not been deployed, and wastewater flow depth exceeds the workable levels, the rehabilitation work shall be discontinued immediately. Rehabilitation work shall only resume when minimum flow levels prevail– normally between 2:00 am to 5:30 a.m. Under these circumstances, one or more of the following flow control systems shall be deployed at no additional cost to the City:

1. Plugging or blocking

2. High-velocity jet nozzles

3. Bypass and/or diversion pumping

B. Before any flow control arrangement is installed, the Contractor shall arrange to de-silt the segment of sewer to be bypassed while still under flow. Subsequent jetting and final cleaning before rehabilitation or repair shall be undertaken while the segment of sewer is bypassed.

C. Precautions:

1. Contractor is responsible for locating any existing utilities in the area the Contractor selects to locate the bypass pipelines. The Contractor shall locate his bypass pipelines to minimize any disturbances to existing utilities and shall obtain approval of the pipeline locations from the City and the Engineer. All costs associated with relocating utilities and obtaining all approvals shall be paid by the Contractor.

2. During all bypass-pumping operations, the Contractor shall protect mains, manholes, and all local sewer lines from damage caused by any equipment. The Contractor shall be responsible for all physical damage to mains, manholes, and all local sewer lines caused by human or mechanical failure.

3.03 PLUGGING OR BLOCKING

A. Insert sewer line plug into the line at a manhole upstream from the manhole or sewer that is to be rehabilitated and tested. For manhole rehabilitation, the plug shall be designed so that a portion of the sewage can be released downstream. During this portion of the operation, shut off or substantially reduce flows so that the manhole can be properly cleaned, prepared, and rehabilitated. Flow shall be shut off as required, to properly rehabilitate the manhole or sewer.

B. Plugging or blocking of sewage flows shall incorporate primary and secondary plugging device. When plugging or blocking is no longer needed for performance and acceptance or work, it is to be removed in a manner that permits the sewage flow to slowly return to normal without surge, to prevent surcharging or causing other major disturbances downstream.

3.04 FLOW BYPASS AND/OR DIVERSION PUMPING SCHEDULING

A. If the City is operating or maintaining conventional pumping facilities and/or flow bypass and/or diversion pumping in the construction area of the present Contract, the Contractor shall coordinate with the City as necessary to determine and effect optimum working arrangements.

B. The Contractor shall immediately cease bypass and/or diversion pumping when so ordered by the City.

3.05 ENVIRONMENTAL PROTECTION MEASURES

A. During flow bypass and/or diversion pumping, the Contractor is prohibited from allowing any sewage to be dumped, or spilled in or onto the ground or any area outside of the existing wastewater collection system. In addition, due care and attention shall be given to prevent vehicular or pump fuel or lubrication oil to be leaked.

3.06 PIPE RESIDUE

A. When flow bypass and diversion pumping operations are complete, the residual contents of sewage in piping shall be drained into the existing sewer prior to disassembly.

END OF SECTION

(This page is intentionally blank)

SECTION 02725

Pipe-Bursting Method

PART 1 – GENERAL

1.01 SCOPE

A. This specification shall cover the rehabilitation of existing, gravity sanitary sewers and sewer service laterals. Acceptable pipe-bursting methods shall include pneumatic, static, push-pull (rod type) and TIM™. All work shall be performed only as directed by the Engineer or shown on the task order Drawings.

B. Pipebursting is a procedure which encompasses a variety of equipment systems which commonly utilize a burster unit or expander to split the existing pipe while simultaneously pulling a new pipe into place. Acceptable pipe-bursting systems which are commonly used for gravity sewers utilize pneumatic and static type bursting units for installation of a continuous high density polyethylene (HDPE) pipe material between manholes. Other types of pipe-bursting systems are utilized to install segmented non-continuous ductile iron pipe are referred to as static push-pull or TIM™. The new pipe may be of the same size or larger size.

C. The scope of work requires the Contractor to provide all materials, labor, equipment, and services necessary for bypass pumping and/or diversion of sewage flows, rehabilitation of existing sanitary sewers by bursting the existing pipe and inserting a new pipe, reconnection of active sewer service connections (service laterals), anchoring new pipe, restoring affected manholes, cleaning, CCTV inspection and final testing of the new pipe system.

D. Pipe-bursting with new HDPE: Pneumatic or static pipe-bursting equipment systems are acceptable for installation of HDPE sewer piping. Pipe-bursting equipment shall be provided with either front or rear expanders for the proper connection to the polyethylene pipe. Pneumatic bursters must be used in conjunction with a constant tension hydraulic twin capstain winch; the size of the winch depends on the diameter of the pipe to be replaced. In no case is the constant tension on the winch to exceed 20 tons. Static bursters shall be equipped with blades or slitters for bursting existing ductile or cast iron pipe.

E. Static Push-Pull Pipe-Bursting with new DIP: Acceptable push-pull pipe-bursting equipment systems shall utilize a hydraulic jack positioned in the retrieval pit along the existing pipe vertical and horizontal centerline which is used to install bursting rods through the existing pipe to the launch pit. The bursting head and expander shall be connected to the leading

bursting rod then retracted through the host pipe as each new pipe segment is connected at the launch pit. The rods shall be typically removed as they are retracted to facilitate installation of the new piping to the retrieval pit. Restrained joint piping shall be provided for all push-pull pipe-bursting installations where new DIP is directed by the Engineer or shown on the task order Drawings. Acceptable equipment systems are equal to Grundoburst® by TT Technologies, Inc. or Hydroburst™ by EarthTool Company, LLC.

F. Tenbusch Insertion Method (TIM™) pipe-bursting with new DIP: This technique of pipe jacking may also be used for installation of new DIP. This type of equipment system utilizes the columnar strength of a segmented bell-less jacking pipe to advance the lead train through the existing pipe. The new pipe is to be jacked behind the lead train piece by piece by the jacking frame (in the work pit). The primary jacking frame shall apply the required thrust to advance the new pipe column (as the front jack is retracted). The pipe adapter section shall be fitted with a lubricant injection port where lubricant (polymer or bentonite) can be injected into the annular space surrounding the new replacement pipe as the pipe advances.

G. The sewer replacement work details include:

1. Site Planning and Preparation:

   a. Perform site investigation and record all pre-existing conditions of all structures within the immediate area, landscaping and/ or roadways prior to construction.

   b. Perform initial CCTV inspection of sewer to be replaced (See Section 02752). Locate all active sewer service connections (laterals) and sags or blockages.

   c. Formulate and execute plans for sag/blockage repairs, launching pipe excavation, layout for sewer bypass pumping system, marking existing utilities, service laterals, cleanout, etc.

2. Pipe Installation:

   a. If directed to do so by the Engineer, install cleanout at edge of property line or easement line for pipe-bursting.

   b. Excavate launching and receiving pits.

   c. Install sewer bypass pumping system.

d. Excavate to relieve effects to existing utilities.

e. Excavate to expose all active service connections (laterals).

f. If directed to do so by the Engineer, provide bypass pump to extract flow from high-volume service connections (laterals).

g. If directed to do so by the Engineer, temporarily disconnect/ plug active service connections (laterals).

h. Install new sewer pipeline by pipe-bursting methods.

i. Install new manholes where required by the Engineer.

j. Anchor pipe and seal manholes.

k. If directed to do so by the Engineer, replace existing active service connections (laterals) from new or existing cleanouts and lamp holes to new sewer pipeline.

l. Perform CCTV inspection of all active service laterals and remedy those determined to be defective.

m. Reconnect all active service connections (laterals) to new sewer pipeline.

n. Connect replacement pipeline to existing manholes. (See Section 02491)

o. Perform post-installation cleaning and CCTV sewer inspection for quality control. (See Sections 02511 and 02752)

p. Remove sewage bypass pumping system(s).

q. Backfill and restore excavations. (See Section 02200)

r. Perform pipeline testing. (See Section 02730)

Note that the items 1b, 2a, 2b, 2c, 2i, 2k, 2l and 2m above are paid for in other bid items. No other additional cost will be paid to the Contractor.

3. Cleanup and restore existing surface condition and structures.

4. Repair defective work per Engineer's final inspection.

H. The Contractor is responsible for proper and accurate installation of the new sewer pipe regardless of the method described in this section and the following subsections. The Contractor shall ensure that the new pipe's vertical and horizontal alignment is as indicated on the plans and/or as existing in the field in accordance with these specifications.

I. Supplying all labor, materials, equipment and apparatus not specifically mentioned herewith or noted on the plans, but which are incidental and necessary to complete the Work specified.

1.02 QUALIFICATIONS

A. The Contractor shall be certified by the pipe-bursting system manufacturer as a fully trained and/or licensed user of the pipe-bursting system. Operation of the system shall be performed by trained personnel. Such training shall be conducted by a qualified representative of the system manufacturer.

B. Polyethylene pipe jointing shall be performed by personnel trained in the use of butt-fusion equipment and recommended methods for new pipe connections. Personnel directly involved with installing the new pipe shall receive training in the proper methods for handling and installing the polyethylene pipe. Training shall be performed by a qualified representative of the fusion equipment manufacturer.

C. Contractor shall hold the City and Engineer harmless in any legal action resulting from patent infringements.

1.03 STANDARD SPECIFICATIONS

A. Except as otherwise indicated, the current editions of the following apply to the Work of this Section:

1.	ASTM D 1599	Test for Short Term Rupture Strength of Plastic Pipe, Tubing and Fittings
2.	ASTM D 1928	Preparation of Compression Molded Test Polyethylene Samples
3.	ASTM D 2122	Determining Dimensions of Thermoplastic Pipe and Fittings
4.	ASTM D 2321	Underground Installation of Thermoplastic Flexible Sewer Pipe

5.	ASTM D 2412 Pipe by	External Loading Characteristics of Plastic Parallel Plate Loading, Determination of
6.	ASTM D 2657	Practice for Heat-Joining Polyolefin Pipe and Fittings
7.	ASTM D 3035	Specification for Polyethylene (PE) Plastic Pipe (SDR_DR) Based on Controlled Outside Diameter
8.	ASTM D 3261	Specification for Polyethylene Plastic Pipe and Fittings Material
9.	ASTM D 3550	Standard Practice for Ring Lined Barrel Sampling of Soils
10.	ASTM F 477	Elastomeric Gaskets (Seals) for Joining Plastic Pipe
11.	ASTM F 714	Specification for Polyethylene (PE Plastic Pipe (SDR_PR) Based on Outside Diameter (3" and larger)
12.	AWS D1.1	AWS Standard Qualification Procedure
13.	ASTM C 12	Standard Practice for Installing Vitrified Clay Pipe Lines
14.	ASTM C 1208	Standard Specification for Vitrified Clay Pipe and Joints for Use in Jacking, Sliplining and Tunnels
15.	ASTM C 828	Standard Test Method for Low Pressure Air Test of Vitrified Clay Pipe Lines
16.	ASTM C 1091	Standard Test Method for Hydrostatic Infiltration and Exfiltration Testing of Vitrified Clay Pipe Lines
17.	ASTM C 425	Standard Specification for Compression Joints for Vitrified Clay Pipe and Fittings
18.	ASTM C 700	Standard Specification for Vitrified Clay Pipe, Extra Strength, Standard Strength and Perforated
19.	ASTM C301	Standard Test Methods for Vitrified Clay Pipe

1.04 RELATED SECTIONS

A. The Work of the following Sections applies to the Work of this Section. Other Sections of the Specifications, not referenced below, shall also apply to the extent required for proper performance of Work.

1. Section 02752: Internal Sewer Condition Assessment
2. Section 02511: Preconditioning and Cleaning Manholes and Sewers
3. Section 02750: Wastewater Flow Control
4. Section 02200: Earthwork
5. Section 02730: Sewers and Accessories
6. Section 02140: Dewatering
7. Section 02735: Sewer Service Connections

1.05 SUBMITTALS

A. The following shall be submitted to the City in writing prior to or at the time indicated in accordance with General Condition Section 28. Failure to do so will prevent progression of the Work to the next stage:

1. Manufacturer's technical literature on the proposed pipe-bursting systems **(At Pre-Construction Meeting)**
2.
3. Written certification from the pipe-bursting system provider that the Contractor or Subcontractor is a trained and licensed installer **(At Pre-Construction Meeting)**
4. Shop drawings, catalog data, and manufacturer's technical data showing complete information on material composition, physical properties, and dimensions of new pipe and fittings. Include manufacturer's recommendations for handling, storage, time for re-connection of laterals, joint welding and repair of pipe and fittings damaged **(At Pre-Construction Meeting)**.
5. The Contractor shall prepare and submit, for the Engineer's approval, a general methodology of the Bursting Plan, including materials and equipment, lateral numeration and manhole restoration procedure and materials, by-pass pumping system

accommodation and maintenance of intermediate flows and connections, plan of operation, construction and restoration of existing sewer service connections **(At Pre-Construction Meeting)**.

6. Certification of workers trained for welding and/or installing **pipe (At Pre-Construction Meeting)**.

7. A detailed methodology for each set up during the course of the contract, but not less than ten days before bursting is planned to commence. This detailed methodology shall be agreed upon between the contractor and the Engineer. **(Before Bursting)**

8. Static Push-Pull Pipe bursting or TIM™: Submittals shall include shop drawings and calculation of columnar strength of the pipe. The drawings shall show dimensions of pipes including inside diameter and wall thickness, details of pipe joints and gaskets showing cushion packing ring (if required) and laying length of each pipe. **(Before Bursting)**

9. Pre and post installation CCTV inspection reports and videos. Post installation reports and videos shall be made after pipe installation and re-connection of all laterals and immediately prior to the commissioning stage **(Pre and Post Installation Stage)**.

10. Methodology for dealing with any possible ground heave shall be fully detailed both in relation to:

    a. Restoration of Landscape areas-restoration of ground contours and surface treatment to meet the reasonable requirements of the property owner, and

    b. Structures: Pre-installation of monitoring devices where the adverse effect of pipe bursting could worsen existing structural defects in buildings and/or other structures. **(At Pre-Construction Meeting)**

11. Manhole invert rebuilding method and materials **(Before Bursting)**

12. A written verification at least 2 days before commencing bursting that the sewer is free of obstructions and debris and is in suitable condition for bursting. **(Before Bursting)**

13. Drawings and design calculations demonstrating adequacy of any proposed temporary work including excavation, locations, sheeting and shoring, method of dewatering, other utilities that may be affected; width and length of working area access pit and portions of

existing sewer to be removed to conduct the Work. **(Before Bursting)**

14. Process Control Sheet to include equipment tensile or compressive load information, excavation reinstatement, tap cut information and pre and post submittal follow up record/survey inspection report, alignment inspection where bursts are complete. **(After Completion of Each Section)**

15. HDPE Repair Methods [If required] **(Before Repairs Are Made)**

16. Sag/Blockage Repair Methods [If required] **(Before Repairs Are Made)**

17. Seismic Monitoring Plan, including details of Licensed Structural Engineer to be used for building surveys **(Before Bursting)**

1.06 TRIAL TEST AND METHODOLOGY REVIEW

A. The Contractor shall comply with the following conditions before a pipe bursting technique becomes accepted as a viable option on a repeat basis:

1. A successful demonstration for a trial length of sewer pipeline, chosen by the Engineer, which requires pipe-bursting shall be carried out including type and quality control tests as recommended by the manufacturer and in compliance with industry standards.

2. The Contractor shall include and allow for representation by the equipment manufacturer if requested and further requirement of the Engineer, subsequent to the trial, to modify the equipment, material and/or installation methodology in order to complete the Work satisfactorily and meet all testing standards at no cost to the City.

3. The Engineer shall formally accept the Contractor as having successfully completed the trial stage should this be the case.

PART 2 – PRODUCTS

2.01 MATERIALS

A. Polyethylene Plastic Pipe shall be high-density solid wall polyethylene pipe (HDPE) in accordance with specifications in Section 02730, subsection 2.04.

1. Sizes of the insertions to be used shall be as indicated or specified to renew the sewer to greater flow capacity.

2. All pipes shall be made of virgin material. No reworked material shall be used except that obtained from the manufacturer's own production of the same formulation.

3. The pipe shall be homogenous throughout and shall be free of visible cracks, discoloration, pitting, varying wall thickness, holes, foreign material, blisters, or other deleterious faults.

4. Dimension Ratios: The minimum wall thickness of the polyethylene pipe shall be SDR 17 throughout.

5. Material color shall be light gray. Light gray interior color of pipe shall allow easier/better viewing for television inspection.

6. Product shall be equal to Driscoplex, manufactured by Chevron Phillips.

B. Restrained Ductile Iron Pipe (DIP) installed by static push-pull methods shall be centrifugally cast with low profile bells manufactured in accordance with the requirements of ANSI/ AWWA C151/A21.51and requires a provision of specially designed pulling head by the pipe manufacturer which is compatible pipe joint. In no instance, shall the pulling force exceed the manufacturer's recommendation.

1. Minimum 350 pressure rating.

2. Boltless restrained joint design capable of a developing a minimum 20,000 pound allowable dead end thrust pulling force without separation or permanent deformation.

3. Pipe lay lengths shall be the maximum allowable length depending upon the field conditions and in no case less than 8'-0".

C. Ductile Iron Jacking Pipe (DIP) installed using the TIM™ method shall be ductile iron gravity service push pipe suitable for direct jacking or pushing pipe installation method to be employed.

1. Joints shall be precision cast and/or equipped with a compression cushioning ring to efficiently transfer and distribute the jacking loads through the joint, therefore maximizing the potential length of installation. The allowable jacking strength capacity of pipe shall be capable of withstanding the maximum jacking forces to be imposed by the operations.

2. Minimum wall thicknesses shall be adequate to withstand the maximum anticipated jacking loads.

3. Pipe lining shall be fusion bonded epoxy type with a nominal thickness of 60 mils to prevent potential cracking and or spalls during installation. Cement lining will not be allowed. Acceptable lining products are those equal to Protecto 401 manufactured by American Cast Iron Pipe Company.

4. The installed pipe shall be capable of providing a positive seal for gravity or low head applications up to 100 feet (43 psi).

5. Product shall be equal to GS Push Pipe Manufactured by American Cast Iron Pipe Company.

6. Pipe shall conform to Specification Section 02730 except as otherwise specified in this Section.

D. Vitrified Clay Pipe (VCP) installed by TIM™ shall be vitrified clay jacking pipe suitable for the direct jacking or pushing pipe installation method to be employed.

1. Pipe shall be manufactured of vitrified clay according to ASTM C 1208. Pipe shall be specifically designed and certified for the jacking application by the pipe manufacturer. The allowable jacking strength capacity of pipe shall be capable of withstanding the maximum jacking forces to be imposed by the operations.

2. Nominal pipe lengths shall be submitted to the Engineer for approval prior to installation. Lengths shall be customized to accommodate limited space for launching/receiving pits as needed.

4. Push fit joints shall be precision machined and equipped with an integral compression cushioning ring to efficiently transfer and distribute the jacking loads through the joint, therefore maximizing the potential length of installation. The joints shall consist of a seat, and polyurethane or elastomeric sealing element, a stainless steel sleeve and a compression cushion ring. The jointing sleeve shall be of AISI Type 316 stainless steel. The jointing seals shall be made of polyurethane or EPDM rubber, or other approved elastomeric material. The compression cushion ring between the joint ends shall conform to ANSI 280.1.

5. Saddles, repairs and other connections to the vitrified clay pipe may be sealed with an approved epoxy resin. The epoxy resin shall be Epibond 157 manufactured by Furane Plastics; WR623 A&B manufactured by Wyndam Chemicals, Inc.; EPON 828 manufactured by Shell Chemical Corp., Wyn-Stik ES-23 A&B or

ES-4 A&B , manufactured by PTW&M Industries, Inc. or approved equal.

6. VCP Pipe products shall be equal to those manufactured by Can Clay Corporation.

2.02 DELIVERY, STORAGE, AND HANDLING

A. Transportation, handling, and storage of the pipe and fittings shall be as recommended by manufacturers.

B. If new pipe and fittings become damaged before or during installation, it shall be repaired as recommended by the manufacturers or replaced as required by the Engineer at the Contractor expense, before proceeding further.

C. Deliver, store and handle other materials as required to prevent damage.

2.03 MATERIAL TESTS

A. A certificate shall be furnished by the manufacturer for all material furnished under this specification. Pipe and fittings may be rejected that do not meet any requirements of this specification.

B. Upon request by the Engineer, the Contractor shall furnish samples for material tests by the City's independent laboratory demonstrating compliance with Specification Section 02730 for HDPE pipe and fittings to verify the required physical properties and characteristics of supplied materials. The City shall pay for tests on pipe samples that meet specification requirements. Contractor shall pay for failed tests and re-testing of failed materials.

2.04 EQUIPMENT

A. The pipe-bursting tools shall be designed and manufactured to force its way through existing, pipe materials, by fragmenting the pipe and compressing the old pipe sections into the surrounding soil as it progresses. The bursting unit shall generate sufficient force to burst and compact the existing pipeline. See manufacturer's specifications for appropriate tool sizing for various pipe diameters, as well as parameters of tool sizing for percentage of upsize allowed.

B. Pneumatic or static pipe-bursting tool bursting head shall be pulled through the existing sewer by a winch or jack located at the reception manhole when installing new HDPE or DIP. The bursting unit shall pull the pipe with it as it moves forward. The bursting head shall incorporate a

shield/expander to prevent collapse of the hole ahead of the pipe insertion. The pipe-bursting unit shall be remotely controlled.

1. The bursting action of the tool shall increase the external dimensions sufficiently, causing breakage of the pipe at the same time expanding the surrounding ground. This action shall not only break the pipe but also create the void into which the burster can be winched or towed by extension rod and enable forward progress to be made. At the same time the pipe, directly attached to the sleeve on the rear of the burster shall also move forward.

2. For HDPE pipe installations, the burster shall have its own forward momentum while being assisted by winching. A hydraulic winch shall give the burster friction by which it can be move forward. To form a complete operating system, the burster must be matched to a constant tension hydraulic winching system.

C. The tenbusch insertion method (TIM™) equipment shall be utilized to jack the new pipe into the existing sewer by using the new pipe as a support column. The front jack advances the bursting unit into the existing pipe independent of the advance of the new pipe column. The new pipe is jacked behind the bursting unit piece by piece by the jacking frame (in the work pit). The primary jacking frame applies the required thrust to advance the new pipe column (as the front jack is retracted). Instrumentation and controls at the operator's control panel (at the jacking frame) shall allow the operator to control the jack through the existing pipe as the new pipe column and bursting unit are "inch-wormed" into the existing sewer.

1. The jacking system shall be capable of continuously monitoring the jacking pressure, the rate of advancement and the distance jacked.

2. The jacking equipment shall have the capability of limiting the jacking force applied so as not to exceed the maximum compressive loads allowed for the replacement pipe.

PART 3 – EXECUTION

3.01 EXISTING UTILITIES AND OBSTRUCTIONS

A. Refer to Section 02730, subsection 3.01

3.02 SEWER SERVICE CONNECTIONS

A. Refer to Section 02730, subsection 3.06 for service reconnections.

3.03 EXISTING FLOW

A. The Contractor shall provide bypass pumping as detailed in Specification Section 02750 – Wastewater Flow Control.

B. The Contractor shall be responsible for maintaining continuous sanitary sewer service to each property connected to the segment of sewer subject to pipe bursting operations.

C. If sewage backup occurs and enters buildings, the Contractor shall be responsible for clean-up, disinfection, repair, property damage, as well as resultant costs and claims.

3.04 PRE-INSTALLATION CCTV INSPECTION

A. Pipelines that will be upgraded by pipe-bursting and shall be televised (CCTV) in conformance with the City of Atlanta Specification for Internal Sewer Condition Assessment for CCTV sewer inspection. (Section 02752)

CCTV inspection conditions shall include the following:

1. Preconstruction video CDs shall be available for viewing by the Engineer before construction begins and throughout the project.

2. Video CDs shall remain property of the City. Contractor shall retain second copy for internal use.

3. All flows tributary to reach of sewer being inspected are to be completely by-passed around the reach during preconstruction inspection if necessary and required by the City.

4. If any portion of the inspection video is of inadequate quality or coverage, as determined by the City, the Contractor will have the portion re-inspected at no additional expense to the City.

3.05 CORRECTION OF PIPE SAG OR BLOCKAGE

A. Significant sags in the sewer pipe or a blockage must be corrected prior to renewing the sewer pipe by pipe bursting. Correction will be accomplished by point repair as specified in Section 02757.

3.06 CONSTRUCTION METHOD

A. Equipment used to perform the Work shall be located away from buildings in order to minimize noise impact, which under all circumstances shall be less than 70 dB unless otherwise allowed by the Engineer due to circumstances beyond the Contractor or pipe-bursting Subcontractor. A

silent engine compartment with the winch shall be provided to reduce machine noise.

B. The Contractor shall install all pulleys, rollers, bumpers, alignment control devices and other equipment required to protect existing manholes, and to protect the new pipe from damage during installation. Lubrication may be used as recommended by the manufacturer. Under no circumstances shall the pipe be stressed beyond its elastic limit (polyethylene) or compressive or tensile limit (vitrified clay and ductile iron).

C. Installed polyethylene pipe shall be allowed to relax and cool following installation in accordance with the manufacturer's recommended time, but not less than a minimum of four (4) hours prior to any reconnection of service lines, scaling of the annulus, or backfilling of the insertion pit, unless otherwise allowed by the Engineer. Sufficient excess length of new pipe, but not less than four (4) inches, shall be allowed to protrude into the manhole to provide for further length reduction. End restraint of pipe ends shall be achieved by means of Central Plastics Electrofusion couplings, or approved equal. The Electrofusion couplings shall be slipped over pipe ends against manhole wall and fused in place. Installation of all electrofusion couplings shall be carried out in accordance with the manufacturers recommended procedures.

D. Following a relaxation period of twenty-four (24) hours for polyethylene pipe, the annular space shall be sealed. Sealing shall be made with a ¼" to ½" diameter activated oakum band soaked in pre-polymer urethane resin sealant equal to AV-219 manufactured by Avanti International. Seal annular space circumferentially at the gap and extend sealant a minimum of four (4) inches through the manhole wall into the manhole in such a manner as to form a smooth, uniform, watertight joint. The terminating pipe ends in manholes shall be connected by Central Plastics Electrofusion couplings, or approved equal, to eliminate ground water infiltration. Installations of electrofusion couplings shall be installed in accordance with the manufacturers recommended procedures.

E. Vitrified clay and ductile iron terminating pipe ends in manholes shall be connected to manholes in accordance with Section 02730.

F. If an existing structure or utility is closer than fifty feet from a bursting unit, the Contractor shall use the services of a seismic monitoring company to record any disturbance to the structure or utility. The peak particle velocity resulting from bursting shall not exceed the following frequencies:

1. Less than 3 Hz: 0.2 inches/second

2. 3– 10 Hz: 0.5 inches/second

3. 10 – 40 Hz: Varying linearly 0.5 to 1.0 inch/second

4. Greater than 40 Hz: 1.0 inches/second

5. The above limits are adopted from modified blasting level criteria given in U.S. Bureau of Mines Recommendations RI-8507. No bursting will be allowed until the monitoring instrument(s) are in place and a monitoring plan is submitted to the Engineer.

6. If the diameter of the pipe to be replaced is less than 18 inches, then existing structures within 25 feet of the bursting unit shall receive a full structural survey by a Georgia licensed Engineer. If the diameter of the pipe to be replaced is 18 inches and greater, then existing structures within 50 feet of the bursting unit shall receive a full structural survey by a Georgia Licensed Engineer.

G. The Contractor shall use pipe-carrying rollers to keep polyethylene pipe above flowers, shrubs, and other vegetative or structural landscaping features that could be damaged by contact with the pipe.

H. Protection and restoration of work area disturbance to the ground surface resulting from heave during pipe-bursting shall be corrected to meet the Engineer's requirements and the area shall be restored in accordance with the Specifications.

I. Install anti-flotation measures for polyethylene pipe wherever ground cover will be less than four feet (4 ft) and is below the groundwater level. Refer to Section 02730. Ensure that bursting can proceed under shallow depth conditions without detrimental ground heave or loss of control of bursting head.

3.07 POST-INSTALLATION CCTV INSPECTION

A. All costs associated with the post-installation CCTV inspection shall be considered incidental to the pipe-bursting work.

B. Following the installation of the new pipelines, CCTV inspection shall be performed in accordance with the requirements of the City of Atlanta Specification of Internal Sewer Condition Assessment (Section 02752 in these Specifications). The finished video shall be continuous over the entire length of the sewer between two manholes and shall be completely free from visual defects.

C. Defects, which may affect the integrity or strength of the pipe in the opinion of the Engineer, shall be repaired or the pipe replaced at the Contractor's expense.

D. Video shall remain property of the City. Contractor shall retain second copy for internal use.

E. Post construction video shall be available to view within one month after the project is completed. Post construction video and a CD-ROM conversion of the documented videos shall be submitted to the City before final invoices, reduction of retainage or release of any retainage withheld.

F. If any portion of the inspection tapes is of inadequate quality or coverage, as determined by the City, the Contractor will have the portion re-inspected and video taped at no additional expense to the City.

3.08 HDPE PIPE JOINING

A. The polyethylene pipe shall be assembled and joined at the site using the butt-fusion method to provide a leak proof joint in strict accordance with the manufacturer's instructions and ASTM D 2657. Threaded or solvent-cement joints and connections are not permitted.

B. All equipment and procedures used shall be used in strict compliance with the manufacturer's instructions and recommendations. Fusing shall be accomplished by personnel who are certified as fusion technicians by a manufacturer of polyethylene pipe and/or fusing equipment.

C. The butt-fused joint shall be true alignment and shall have uniform rollback beads resulting from the use of proper temperature and pressure. The joint shall be allowed adequate cooling time before removal of pressure. The fused joint shall be watertight and shall have tensile strength equal to that of the pipe.

D. All joints shall be subject to acceptance by the Engineer and/or Engineer's representative prior to insertion. All defective joints shall be cut out and replaced at no cost to the City. Any section of the pipe with a gash, blister, abrasion, nick, scar, or other deleterious fault greater in depth than ten percent (10%) of the wall thickness, shall not be used and must be removed from the site. However, a defective area of the pipe may be cut out and the joint fused in accordance with the procedures stated above.

E. Any section of the pipe having other defects such as concentrated ridges, discoloration, excessive spot roughness, pitting, variable wall thickness or any other defect of manufacturing or handling as determined by the Engineer and/or his representative shall be discarded and not used.

F. Terminal sections of pipe that are joined within the insertion pit shall be connected with Central Plastics Electrofusion Couplings or connectors

with tensile strength equivalent to or greater than that of the pipe being joined.

3.09 INFILTRATION AND EXFILTRATION TESTING

A. Pipelines rehabilitated and replaced shall be tested for watertightness in accordance with Specification Section 02730. This applies to ductile iron, HDPE and vitrified clay replacement pipe. All inlets to the system shall be effectively closed and any residual flow shall be deemed to be infiltration.

B. Notwithstanding the satisfactory completion of the above test for pipelines, if there is any discernible flow of water entering rehabilitated pipelines or manholes, at a point that can be located by visual or CCTV inspection, the Contractor shall take such additional measures required by the Engineer to stop infiltration at the Contractor's expense.

C. All costs associated with the watertightness test and foregoing requirements shall be considered incidental to the work and shall be included in the unit price.

3.10 POST INSTALLATION DEFLECTION

A. All polyethylene pipe installed by pipe-bursting shall be subjected to a visual deflection check to determine if ovality greater than 10% exists by observation of the post installation CCTV inspection.

B. The deflection test shall be performed by the Contractor in the presence of the Engineer. All costs associated with the deflection test and foregoing requirements shall be considered incidental to the pipe-bursting work and shall be included in the unit price for pipe-bursting.

PART 4 – WARRANTY

4.01 MATERIAL WARRANTY

A. A written guarantee of 5 years, submitted to the City for the specific project, shall be provided by the Manufacturer against any breakdown of the polyethylene pipe material effectiveness.

.

4.02 WORKMANSHIP WARRANTY

A. A written guarantee of 2 years minimum shall be provided by the Contractor against any shortcoming in Workmanship.

END OF SECTION

Attachment A

PROCESS CONTROL SHEET - PIPE BURSTING (Following Mainline or Lateral Burst)

The Contractor shall complete a Process Control Sheet for each pipeline replaced and shall submit a copy to the Engineer immediately following the bursting operation and it's inspection. The Process Control Sheet shall include the information below as a minimum unless otherwise modified by the Engineer. In the event there are more than one inspector or contractor confirming the process completion per form, each section should be initialed by the performing inspector. All sections that were not completed due to lack of applicability to the replacement method used should have "N/A" entered.

Date(s) Rehabilitation Carried Out:

Date Process Control Sheet Completed:

	General Process Control Section ***- state whether process control sheet completed for*** **Mainline , or Lateral**	
General	WEATHER ETC: Prior to Commencing Burst (include air temperature)	
	During Burst (include air temperature)	
	Number of Cleanouts?	
	LATERAL CONNECTION(S):• Type - *circle*	SIDE CROWN SPRINGING INVERT --straight entry --bend entry
	• Number (ea), Clock ref. from US MH	NO…….,
	• Sizes (in)	
	Laterals Rehabbed? Type and Distance (ft) from Upstream MH *Complete separate form for laterals Pipe-burst or CIPP lined.*	
	Number of Local Repairs. Type and Distance (ft) from Upstream MH or from Mainline	
	Confirm all surface structures adjacent to burst inspected, recorded if defective, and structurally adequate for work to proceed. ☐ Yes ☐ No	If no explain here:
	Confirm line CCTV'd and agreed bursting viable ☐ Yes ☐ No	If no explain here:
	Confirm line cleaned and prepared for bursting ☐ Yes ☐ No	If no explain here:
Location	Upstream Manhole ID ☐ Entry ☐ Reception	MH#
	Downstream Manhole ID ☐ Entry ☐ Reception	MH#
	Intermediate Manhole ID(s), if applicable	MH#
	Street Name(s)/Address	
Material Composition Details	INSTALLED PIPE: • Welded length (ft)	
	• Installed length (ft)	
	• Material - *circle one*	HDPE PVC DIP CLAYWARE OTHER (state):
	MANHOLE COUPLING/	
	MAINLINE CONNECTION: • Type and Number (ea)	
	• Nominal Sewer Size (in)	
Pipe Installation	INSTALLATION METHOD **	
	Bursting Time	Start Time Finish Time
	Relaxation Time	Start Time Finish Time
	Taps - Installation Dates not applicable	Start Date Finish Date
	List Taps and Footages (ea) not applicable	
	List Abandoned Service Footages (ea) not applicable	
	WINCH DETAILS: • Type / Make	
	• Load Capacity	
By Pass /Reinstate Flow	By Pass Commenced (Date/Time) not applicable	
	Main Flow Reinstated (Date/Time) not applicable	
	Excavations Reinstated and Accepted ? ☐ Yes ☐ No	
Welding HDPE	WELDING DETAILS: • Date / Time	
	• Number of Welds	
	DAMAGE RECTIFICATION, IF ANY: • Footage ? Rectification?	
	WELD TESTS: • Method	
	• Failures? Rectification?	
Signatures	**Contractor** By signing below, I agree that the above General Process Control section has been inspected and confirmed. I understand that I have the right to indicate, by my initials, which sections I am confirming if I have not completed all of the inspections myself. I am aware that all sections left blank will be considered incomplete and may be sent back with request for additional information. Type/Print Name Here	**Inspector** By signing below, I agree that the above General Process Control section has been inspected and confirmed. I understand that I have the right to indicate, by my initials, which sections I am confirming if I have not completed all of the inspections myself. I am aware that all sections left blank will be considered incomplete and may be sent back with request for additional information. Type/Print Name Here
	Signature X	Signature X

OVER

Contractor Specific Process Control Section		
Material Composition Details	PIPE MATERIAL:	
	• Manufacturer / Joint Type	
	• Nominal Pipe Size	
	• Actual Inside Diameter (in)	
	• Wall Thickness (in) or Class	
Seismic Monitoring	SEISMOMETER: ☐ Yes ☐ No	
	• Type/Make	
	• Range	
	• Calibrated?	
	• Crack Monitor Results (if applicable)	
	• Red Zone Incident (s)?	
	• Yellow Zone Incident (s)?	
	• Other - Range	
Contractor Signatures	**Contractor** I agree that the above Contractor Specific Process Control Section is complete and accurate to the best of my knowledge. I understand that all sections that are left blank will be considered incomplete sections and may be sent back for additional information. Type Name Here Signature **X**	

* Red Zone - > 0.75 inch per second < 1.0 inch per second; Yellow Zone >0.5 inch per second< 0.75 inch per second

** Please indicate which method was used: e.g., Pneumatic (P), Static (S), Other (Tennbusch, Hydraulic)

(This page is intentionally blank)

SECTION 02730

Sewers and Accessories

PART 1 – GENERAL

1.01 SCOPE

A. This Section describes products to be incorporated into sewers and accessories and requirements for the installation and use of these items. Furnish all products and perform all labor necessary to fulfill the requirements of these Specifications.

B. General: Supply all products and perform all work in accordance with applicable American Society for Testing and Material (ASTM), American Water Works Association (AWWA), American National Standards Institute (ANSI), or other recognized standards. Latest revisions of all standards are applicable.

1.02 QUALIFICATIONS

A. If requested by the Engineer, submit evidence that manufacturers have consistently produced products of satisfactory quality and performance for a period of at least two years.

1.03 SUBMITTALS

A. If required by the City or Engineer, complete product data and engineering data shall be submitted to the Engineer in accordance with the requirements of General Condition Section 28 of the Contract Documents.

1.04 TRANSPORTATION AND HANDLING

A. Unloading: Furnish equipment and facilities for unloading, handling, distributing and storing pipe, fittings, valves and accessories. Make equipment available at all times for use in unloading. Do not drop or dump materials. Any materials dropped or dumped will be subject to rejection without additional justification.

B. Handling: Handle pipe, fittings, valves and accessories carefully to prevent shock or damage. Handle pipe by rolling on skids, forklift, or front loader. Do not use material damaged in handling.

C. Lined pipe shall be handled and transported to prevent damage to linings.

1.05 STORAGE AND PROTECTION

A. Make arrangements for the use of suitable storage areas for piping and other materials required for the Work.

B. Stored materials shall be kept safe from damage. The interior of all pipes, fittings and other appurtenances shall be kept free from dirt or foreign matter at all times.

C. Pipe shall not be stacked higher than the limits recommended by the manufacturer. The bottom tier shall be kept off the ground on timbers, rails or concrete. Pipe in tiers shall be alternated “bell, plain end,” “bell, plain end.” At least two rows of timbers shall be placed between tiers and chocks, affixed to each other in order to prevent movement. The timbers shall be large enough to prevent contact between the pipes in adjacent tiers.

D. Store joint gaskets in a cool location, out of direct sunlight. Gaskets shall not come in contact with petroleum products. Gaskets shall be used on a first-in, first-out basis.

E. PVC pipe and fittings shall not be stored in direct sun light.

1.06 QUALITY ASSURANCE

A. Product manufacturers shall provide the Engineer with written certification that all products furnished comply with all applicable provisions of these Specifications.

B. If ordered by the Engineer, each pipe manufacturer shall furnish the services of a competent factory representative to supervise and/or inspect the installation of pipe. This service will be furnished for a minimum of five days during initial pipe installation.

C. Upon request by the Engineer, the Contractor shall furnish samples for material tests by the City’s independent laboratory demonstrating compliance with this Specification to verify the required physical properties and characteristics of supplied materials. The City shall pay for tests on pipe samples that meet specification requirements. Contractor shall pay for failed tests and re-testing of failed materials.

PART 2 – PRODUCTS

2.01 DUCTILE IRON PIPE (DIP)

A. Ductile iron pipe shall be utilized where shown on the Drawings or directed by the Engineer.

B. Ductile iron pipe shall be manufactured in accordance with AWWA C151. All pipes, except specials, shall be furnished in nominal lengths of 18 to 20 feet. Sizes will be as shown on the Drawings. All pipes shall have a minimum pressure rating as indicated in the following table, and corresponding minimum wall thickness, unless otherwise specified, or shown on the Drawings. Pipe wall thickness shall be determined based on dead loads indicated on the Drawings and the anticipated live loads, assuming a minimum HS 20 live load.

Pipe Sizes (inches)	Pressure Class (psi)
4 - 12	350
14 - 20	250
24	200
30 - 60	150

C. Fittings and Accessories:

1. Fittings shall be ductile iron and shall conform to AWWA C110/ANSI A21.10 or AWWA C153/ANSI A21.53, with a minimum rated working pressure of 250 psi.

2. Flanged elbow fittings shall be ANSI pattern using short radius elbows, except where noted differently on the Drawings. Special fittings, ductile iron wall pipes and sleeves shall conform to the dimensions and details as shown on the Drawings.

D. <u>Joints for Ductile Iron Pipe and Fittings</u>:

1. <u>General</u>:

a. Joints for ductile iron pipe and fittings shall be mechanical joints, restrained, flanged or push-on joint as specified herein or in Section 02725.

b. Unless otherwise shown on the Drawings, specified or directed, all ductile iron pipe laid underground shall be joined using push-on type joints.

c. In all cases, gaskets shall be made of material that will not be damaged by the fluid being transported or by the environment in which the pipe is installed.

d. Provide the necessary bolts for connections. All bolts and nuts shall be threaded in accordance with ANSI B1.1, Coarse Thread Series, Class 2A external and 2B internal fit. All bolts and nuts shall be made in the U.S.A.

2. Mechanical Joints:

a. Joints shall conform to AWWA C111/ANSI A21.11.

b. Bolts and nuts shall be Tee Head Bolts and nuts of high strength low-alloy steel in accordance with ASTM A 242 to the dimensions shown in AWWA C111/ANSI A21.11.

c. Gaskets shall be in accordance with AWWA C111/ANSI A21.11 and shall be constructed of plain rubber.

d. Mechanical joint glands shall be ductile iron.

3. Push-On Joints: Push-on joints and gaskets shall conform to AWWA C111/ANSI A21.11. Details of the joint design shall be in accordance with the manufacturer's standard practice such as ACIPCO "Fastite," McWane (Clow) "Bell-Tite," or U.S. Pipe "Tyton" joints.

E. Linings & Coatings: Sewer pipe and fittings shall be cement lined in accordance with ANSI/AWWA C104/A21.4.

F. Polyethylene Encasement: Polyethylene film shall meet the requirements of AWWA C 105.

G. Wall Sleeves and Wall Pipes:

1. Where piping passes through concrete structures, furnish and install wall sleeves unless wall pipes or other provisions are specifically shown on the Drawings. Wall sleeves shall be accurately located and securely fastened into position before concrete is poured.

2. Wall Sleeves:

a. For pipe sizes smaller than 3-inches, wall sleeves shall be steel oversize sleeves furnished with a full circle, integral or continuously welded waterstop collar. The sleeve seal shall be the mechanically expanded, synthetic rubber type. Provide all associated bolts, seals and seal fittings, pressure clamps, or plates necessary to achieve a watertight installation. Sleeves shall extend the full thickness of the concrete. Sleeves and seal shall be Link Seal.

b. For larger pipe sizes, wall sleeves shall be ductile iron mechanical joint wall sleeves. Unless specified or shown otherwise for a specific situation, wall sleeves shall be mechanical joint bell-plain end types with waterstop/thrust collar. The collar shall be capable of withstanding a thrust force caused by a 250 psi dead end load from either direction on that size pipe. Sleeves shall be constructed with studs and mechanical joint retainer gland on the air side of the concrete structure. Provide retainer gland where shown on the Drawings. Where the concrete structure is exposed to dirt on one side and is wet on the other side, construct with studs and glands on the dirt side. Wall sleeves shall be equal to ACIPCO A-10771.

3. Wall Pipes:

a. Wall pipes shall be either ductile iron with integral waterstop/thrust collar or centrifugally cast ductile iron with a continuously welded waterstop/thrust collar. The welded on collar shall be attached to the pipe by the manufacturer. The collar shall be capable of withstanding a thrust force caused by a 250 psi dead end load from either direction on that size pipe. Wall pipes shall be furnished uncoated on the outside and cement lined on the inside. Unless specified or shown otherwise, wall pipes shall be flange end types.

b. Wall pipes shall be cast and/or fabricated and lined in one manufacturer's facilities and delivered to the job site ready for use.

2.02 REINFORCED CONCRETE PIPE (RCP)

A. Pipe:

1. Pipe shall be bell and spigot reinforced concrete conforming to ASTM C 76 for Class III, IV and V pipe as shown on the Drawings.

2. In addition, the pipe and materials shall meet the following requirements:

   a. Concrete shall have a minimum compressive strength of 5,000 psi for Class III and IV and 6,000 psi for Class V

   b. Cement shall meet the requirements of ASTM C 150, Type II

   c. Absorption shall not exceed six percent when tested in accordance with ASTM C 497.

3. Reinforced concrete pipe shall be supplied in lengths of at least eight feet, except for specials.

B. Joints: Pipe shall have concrete and rubber O-ring gasket type joints conforming to ASTM C 361. A rectangular groove shall be supplied in the spigot end to receive the rubber O-ring gasket, and it shall be so formed that when the joint is complete the gasket will be deformed to a rectangular shape and confined on all four sides. Bell and spigot surfaces shall be accurately formed and smooth to provide a close sliding fit with a nominal clearance of 1/16-inch.

C. Fittings and Specials: Reinforced concrete pipe fittings and specials shall meet all requirements for reinforced concrete pipe, including materials of construction, structural strength, linings, and joints. Provide special adapters or transition pieces for connection to pipe of different materials where shown on the Drawings.

D. Acceptance:

1. Acceptance of pipe shall be based on plant load-bearing tests for the load to produce 0.01-inch crack, material tests, and inspection of manufactured pipe for visual defects and imperfections as described in Paragraph 5.1.1 of ASTM C 76.

2. Provide results of tests on pipe, pipe materials, joint material, and made-up joints performed by an independent testing laboratory approved by the Engineer. Include materials, absorption, crushing, and hydrostatic leakage tests on pipe of each size in accordance with applicable specifications.

3. Each length of pipe shall be stamped by a regular employee of the approved testing laboratory.

4. Inspect pipe after delivery for laboratory stamp, shape, cracks, uniformity, blisters and imperfect surfaces, hammer test, damaged ends, and gasket grooves. Do not accept or use pipe with repaired or patched gasket grooves or shoulders. Any pipe repaired or patched is subject to rejection if such repairs or patches, in the opinion of the Engineer or City, are not sound and properly finished.

5. The City shall, at its own discretion, select another independent testing laboratory to confirm those tests performed by the manufacturer's testing laboratory. This testing laboratory shall observe the tests conducted by the laboratory selected by the manufacturer, or, as necessary, conduct its own tests. The manufacturer shall provide the necessary facilities for the performance of these tests at the plant site. These test specimens shall be provided in accordance with paragraph 11 of ASTM C 76.

6. No pipe shall be shipped before it has been cured for a minimum of 14 days.

2.03 POLYVINYL CHLORIDE (PVC) GRAVITY SEWER PIPE

A. Acceptability of PVC pipe for gravity sewers is indicated in the following table:

Standard Minimum Thickness Type PVC[1]	**Wall**	**Acceptable Manufacturers**	**≤ 6**	**8 to 15**	**18**	**21**	**24**
ASTM D 3034 SDR 35 12454B	Solid Wall	Open	Yes	Yes	No	No	No

[1] As specified in ASTM D 1784

B. All pipes shall have a minimum pipe stiffness of 46 psi at five percent deflection as determined by ASTM D 2412.

C. PVC gravity sewer pipe shall be supplied in lengths not longer than 13 feet.

D. Fittings:

1. Fittings 15 inches in diameter and less shall be manufactured in accordance with ASTM D 3034. PVC compound shall be 12454B or 12454C as specified in ASTM D 1784.

2. For sizes 8-inches and less in diameter, fittings shall be molded in one-piece with no solvent welded joints. Minimum socket depths shall be as specified in ASTM D 3034, Table 2.

3. For sizes 10-inches and larger in diameter, fittings shall be fabricated from pipe conforming to ASTM D 3034 using solvent welding. No field fabrication of fittings will be allowed. All such fabrication shall be performed at the factory and the fittings shall be delivered ready for use.

4. 4-inch and 6-inch cleanout piping assembly shall be constructed with by connecting the cleanout branch to the lateral with a 2-way, smooth flowing sanitary cleanout tee to facilitate the insertion of a sewer snake or exploratory flexi-cameras for either direction. The 2-way cleanout fitting shall be manufactured with gasketed hub connections. Solvent weld connections will not be allowed. Acceptable manufacturers are those equal to Plastic Trends, Inc. Part No. G1006.

5. Fittings 18 inches in diameter and larger shall be fabricated from pipe conforming to ASTM F 679 using solvent welding. No field fabrication of fittings will be allowed. All such fabrication shall be performed at the factory and the fittings shall be delivered ready for use.

E. Joints: Joints for pipe and fittings shall be of the integral bell and spigot type with a confined elastomeric gasket having the capability of absorbing expansion and contraction without leakage, when tested in accordance with ASTM D 3212. Gaskets shall meet the requirements of ASTM F 477. The joint system shall be subject to the approval of the Engineer and shall be identical for pipe and fittings.

F. Manhole Connections - Solid Wall Pipe: The sewer shall be connected to manholes utilizing a boot connection.

G. Acceptance: Acceptance will be based on the Engineer's inspection and the manufacturer's written certification that the pipe and fittings were manufactured and tested in accordance with the applicable standards.

2.04 HDPE PIPE

A. The pipe supplied under this specification shall be high performance, high molecular weight, high-density polyethylene pipe equal to Driscoplex as manufactured by Chevron Phillips Chemical Company. The pipe material shall be Type III, Class C, Category 5, P34 material as described in ASTM D 1248. Minimum cell classification values of the pipe material shall be (3 4

5 4 3 4 c) as referenced in ATSM D 3350. The SDR shall be 17. The fittings supplied under this specification shall be molded from a polyethylene compound having a cell classification equal to or exceeding the cell classification of the pipe supplied under this specification.

B. Physical Properties of Pipe of Pipe Compound:

1. Density: The density shall be 0.941 – 0.957 gms/cm when tested in accordance with ASTM D 1505.

2. Melt Flow: Melt Flow shall be no greater than 0.11 gm/10 min. When tested in accordance with ASTM D 1238 – Condition E.

3. Flex Modulus: Flexural Modulus shall be 110,000 psi to less than 160,000 psi when tested in accordance with ASTM D 790.

4. Tensile Strength at Yield: Tensile strength at yield shall be 3,200 PSI to less than 3,500 PSI when tested in accordance with ASTM D638.

5. ESCR: Environmental Stress Crack Resistance shall be in excess of 5,000 hours with zero failures when tested in accordance with ASTM D 1693 Condition C.

6. Hydrostatic Design: Basic shall be 1,600 psi at 23-C when tested in accordance with ASTM D 2837.

C. Deviations: If a supplier chooses to submit a bid that does not meet all the requirements of this specification, his bid shall include a written description of the deviation with data that shows the magnitude of the deviation and the justification for the deviation from this specification. The decision to accept material deviating from this specification shall be the responsibility of the specifying engineer.

D. Certification: The City or the specifying engineer may request certified lab data to verify the physical properties of the materials supplied under this specification or may take random samples and have them tested by an independent laboratory.

E. Rejection: Polyethylene pipe and fittings may be rejected for failure to meet any of the requirements of this specification.

F. Pipe Dimensions: Pipe supplied under this specification may be iron pipe size (IPS) or ductile iron pipe size (DIPS) as produced by the manufacturer. IPS or DIPS nominal pipe sizes equal to the pipe dimension shown on the Drawings shall be provided for all pipe sizes

equal to or less than 12 inches. IPS or DIPS actual inside diameter shall be provided which is equal to or greater than the pipe dimension shown on the Drawings for all pipe sizes greater than 12 inches. The SDR (Standard Dimension Ratio) of the pipe supplied shall be as specified by the Engineer.

G. Color: Material color shall be light gray. Light gray interior color of pipe shall allow easier/better viewing for television inspection.

H. Anti-flotation Measures: Where ground cover for HDPE pipe is less than four feet (4 ft), antiflotation devices are to be installed in order to overcome potential uplifting forces from groundwater. These devices may include, but are not limited to, precast concrete saddles, gravel-filled saddle bag pipeline weights, or cast-in-place anti-flotation collars (per Detail 21 on the Drawings). Wherever such a device is to be installed, the Contractor shall be responsible for performing the necessary calculations to ensure that the pipe will not float AND that the pipe and/or antiflotation device will not be overstressed. The pipe manufacturer's allowable shear stress, compressive stress due to buckling and thermal expansion shall be considered in the calculations. Minimum factor of safety against flotation is 1.5. These calculations shall be submitted with shop drawings for anti-flotation devices when such devices are required.

2.05 HDPE MANHOLES

A. Material: The material used under this specification shall be high performance, high molecular weight, high density polyethylene plastic compound having a cell classification of 334433C or higher. The material must have a proven capacity for sustaining long term stresses (radial loading, ring compressive thrust, bending, buckling, axial strain, axial buckling, and groundwater effects) as quantified under ASTM Test Method D2837 or other applicable testing procedures under ASTM.

B. Appurtenances:

1. Polyethylene Manhole Covers: Polyethylene flat-plate covers shall be designed to withstand light live-loads, such as light equipment and personnel. All manhole covers shall prove to meet this requirement through either physical testing or design calculations. If subject to repeated vehicular loading, the cover should be capped or cast in concrete.

2. Risers: All riser sections shall be joined by thermal fusion or gasket joints. Where risers are joined by a gasket joint, the joints must meet the requirements of Specification D 3212.

3. Cones: Where gasket joints are required to seal the connection between a manhole cone or top, the gasket joint shall prove to provide an adequate seal against the maximum water-head expected for the joint in question.

4. Antiflotation Devices: Where manhole risers extend below the groundwater level, antiflotation devices are to be installed in order to overcome any foreseen uplifting forces. These devices may include, but are not limited to, anchoring to a concrete slab, or attaching a concrete ring to the base or riser. Wherever such a device is to be installed, the Contractor shall be responsible to perform the necessary calculations to ensure that both the manhole will not float AND that the antiflotation device will not be overstressed. These calculations shall be included with the shop drawing submittals.

5. Pipe Connection: Each HDPE manhole will have a stub for all pipes entering and leaving the chamber. The Contractor shall supply under this section all necessary connections, couplings, etc., to join adjacent pipe to HDPE stub pipe.

2.06 PRECAST CONCRETE MANHOLES AND PRODUCTS

A. Precast Concrete Sections:

1. Precast concrete sections shall meet the requirements of ASTM C 478 or ASTM C 913. The minimum compressive strength of the concrete in precast sections shall be 4,000 psi.

2. Wall thickness shall be as shown on the Drawings.

3. Transition slabs or cones that convert bases larger than four feet in diameter to four foot diameter risers shall be designed by the manhole manufacturer to carry the live and dead loads exerted on the slab.

4. Seal joints between precast sections by means of rubber O-ring gaskets or flexible butyl rubber sealant. Butyl rubber sealants shall meet the requirements of AASHTO M-198. Sealant shall be pre-formed type with a minimum nominal diameter of 1-inch. Butyl rubber sealant shall be equal to Kent Seal No. 2 or Concrete Sealants CS202.

5. Each section of the precast manhole shall have not more than two (2) holes for the purpose of handling and laying. These holes shall be tapered and shall be plugged with rubber stoppers or mortar after installation.

6. Polypropylene plastic manhole steps shall be installed in each section of the manhole in accordance with the City of Atlanta standard details.

B. Brick and Mortar: Brick shall be whole and hardburned, conforming to ASTM C 32 Grade MS. Mortar shall be made of one part Portland cement and two parts clean sharp sand. Cement shall be Type 1 and shall conform to ASTM C 150. Sand shall meet ASTM C 144.

C. Foundations: A prepared foundation shall be placed for all brick structures after the foundation excavation is completed and accepted. Unless otherwise specified, the base shall consist of reinforced concrete mixed, prepared, and placed in accordance with the requirements of Section 03300. The foundation shall be built to the correct elevation and shall be finished to cause the least possible resistance to flowing water.

D. Laying Brick: All brick shall be clean and thoroughly wet before laying so that they will not absorb any appreciable amount of additional water at the time they are laid. All brick shall be laid in freshly made mortar. Mortar that is not used within 45 minutes after water has been added shall be discarded. Retempering of mortar shall not be permitted. An ample layer of mortar shall be spread on the beds and a shallow furrow shall be made in it, which can be readily closed by the laying of the brick. All bed and head joints shall be filled solid with mortar. End joints of stretchers and side or cross joints of headers shall be fully buttered with mortar and a shoved joint made to squeeze out mortar at the top of the joint. Any bricks that may be loosened after the mortar has taken its set shall be removed, cleaned, and relaid with fresh mortar. No broken or chipped brick shall be used in the face, and no spalls or bats shall be used except where necessary to shape around irregular openings or edges; in which case, full bricks shall be placed at ends or corners where possible, and the bats shall be used in the interior of the course. In making closures, no piece of brick shorter than the width of a whole brick shall be used; and wherever practicable, whole brick shall be used and laid as headers.

E. Joints: All joints shall be slushed with mortar at every course, but slushing alone will not be considered adequate for making an acceptable joint. Exterior faces shall be laid up in advance of backing. Exterior faces shall be back plastered or pargeted with a coat of mortar not less than ½ -inch thick before the backing is laid up. Prior to pargeting, all joints on the back of face courses shall be cut flush. Unless otherwise noted, joints shall be not less than ¼-inch or more than ½-inch wide and whatever width is adopted shall be maintained uniform throughout the work.

F. Pointing: Face joints shall be neatly struck, using the weather joint. All joints shall be finished properly as the laying of the brick progresses. When nails or line pins are used, the holes shall be immediately plugged with mortar and pointed when the nail or pin is removed.

G. Cleaning: Upon completion of the work, all exterior surfaces shall be thoroughly cleaned by scrubbing and washing down with water and, if necessary to produce satisfactory results, cleaning shall be done with a 5 percent solution of muriatic acid, which shall then be rinsed off with liberal quantities of clean fresh water.

H. Curing and cold weather protection: In hot or dry weather, the brick masonry shall be protected and kept moist for at least 48 hours after laying the brick. Brick masonry work or pointing shall not be done when there is frost in the brick or when the air temperature is below 50 degrees F, unless the Contractor has on the project, ready to use, suitable covering and an artificial heating devices necessary to keep the atmosphere surrounding the masonry at a temperature of not less than 60 degrees F for the duration of the curing period.

I. Iron Castings:

1. Cast iron manhole frames and covers shall meet the requirements of ASTM A 48 for Class 30 gray iron and all applicable local standards. All castings shall be tough, close grained, smooth, and free from blow holes, blisters, shrinkage, strains, cracks, cold shots and other imperfections. No casting will be accepted which weighs less than 95 percent of the design weight. Shop drawings must indicate the design weight and provide sufficient dimensions to permit checking.

2. Manhole frames and covers shall be as shown on the Standard Details.

3. All frames and covers shall have machined horizontal bearing surfaces.

4. All manholes shall have standard frames and covers except where specifically shown otherwise on the Drawings.

5. Watertight covers shall be bolt-down type and shall be equipped with four 1/2-inch stainless steel bolts and a 1/8-inch red rubber or rubber O-ring gasket. Covers shall be rotatable and interchangeable. Bolt holes shall be bored through so that debris entering the bolt hole will fall into the manhole. Bolt holes shall have the full 360 degree circle within the cover's radius when bored through the cover.

J. Boots: Provide preformed rubber boots and fasteners equal to those manufactured by Kor-N-Seal or Press Seal Gasket Corporation. Boots may be mechanically attached to the manhole or cast into the walls of the manhole.

2.07 MISCELLANEOUS

A. Flexible Adapter Couplings:

1. Couplings for pipe sizes 15-inches in diameter and less shall be elastomeric plastic sleeves designed to connect pipes of dissimilar materials. Adapters shall provide a positive seal against infiltration and exfiltration and remain leakproof and rootproof up to 4.3 psi. The adapter manufacturer shall provide all stainless steel clamps and required accessories.

2. Couplings shall be products equal to Fernco and shall be installed in accordance with the manufacturer's recommendations.

C. Inside Drop Connections:

1. Where a sewer entering an existing manhole is more than 24-inches above the manhole invert, an inside drop inlet shall be constructed to lower the inlet elevation of the sewer to coincide with the invert elevation of the manhole. If required, the manhole invert and bench shall be re-built in conjunction with the installation of the drop connection to ensure a smooth flow path for the incoming sewer drop. The inside drop connection shall be field fabricated with Schedule 80 PVC fittings and piping, or may be shop fabricated with different materials by a specialty manufacturer subject to approval by the Engineer (e.g. molded polyethylene inside drop inlet by GU International). The top fitting of the inside drop connection shall be a tee fitting or a 90-degree bend with a clean out attachment at the opposite end of the incoming flow opening (to facilitate future sewer inspection and/or cleaning). The bottom fitting of the drop shall be a 90-degree bend into the manhole invert, or a plain end may be used where a concrete fillet is constructed to transition flow from the plain end into the manhole invert. All pipe to manhole connections must conform to ASTM C923. Anchor straps and bolts shall be 304 stainless steel, minimum, with 4 vertical feet maximum spacing (2 straps minimum).

D. Chemical Root Treatment:

1. Chemical Root treatment shall be utilized where indicated to kill invasive roots and to prevent root re-growth in small diameter sewers. Chemical treatment shall be non-carcinogenic, herbicidal type and applied by professional applicator personnel licensed by the Georgia Department of Agriculture. The applicator shall have a minimum of one year experience and having successfully treated a minimum of one hundred thousand lineal feet of sewer main piping in the continental United States of America.

2. Preconditioning or cleaning of the sewer main shall not be required before or after application of chemical root control unless specifically indicated by the Engineer (e.g. to remove large blockages or debris, which may be surcharging the sewer). Root masses do not generally require cutting by mechanical means prior to application of chemical root treatment and shall not be performed unless directed by the Engineer. In such an event, the contractor shall coordinate root cutting with application of the chemical root treatment in accordance with the manufacturer recommendations to meet the desired level of performance stated below.

3. Each treatment application shall progress from the downstream manhole (whenever practical) at such a rate and pressure so as to provide full chemical contact of the entire interior surface of the sewer main while providing penetration of all piping joints, cracks, holes and service connections. The retention time and concentration of the chemical shall be sufficient to kill all roots in the sewer and prevent root re-growth for a period of two years after the application. If re-growth is evident prior to expiration of the aforementioned two-year period, the Contractor shall provide additional chemical root treatment to the satisfaction of the City at no additional cost.

4. Acceptable products are diquat based herbicides equal to those manufactured by Dukes Root Control, Inc.

PART 3 – EXECUTION

3.01 EXISTING UTILITIES AND OBSTRUCTIONS

A. The Contractor shall call the Utilities Protection Center (UPC) (1-800-282-7411) as required by Georgia law (O.C.G.A. §§25-9-1 through 25-9-13) and all utilities, agencies or departments that own and/or operate utilities in the vicinity of the construction work site, at least 72 hours (three

business days) prior to construction, to verify the location of the existing utilities.

B. Existing Utility Location: The following steps shall be exercised to avoid interruption of existing utility service.

1. Provide the required notice to the utility owners and allow them to locate their facilities according to Georgia law. Field utility locations are valid for only ten days after original notice. The Contractor shall ensure, at the time of any excavation, that a valid utility location exists at the point of excavation.

2. Expose the facility to verify its true location and grade for a distance of at least 200 feet in advance of pipeline construction to verify its true location and grade. Repair, or have repaired, any damage to utilities resulting from locating or exposing their true location.

3. Avoid utility damage and interruption by protecting it with means or methods recommended by the utility owner.

4. Maintain a log identifying when phone calls were made, who was called, area for which utility relocation was requested and work order number issued, if any. The Contractor shall provide the Engineer an updated copy of the log bi-weekly, or more frequently if required.

C. Conflict with Existing Utilities:

1. Horizontal Conflict: Horizontal conflict shall be defined as when the actual horizontal separation between a utility, main, or service and the proposed water main does not permit safe installation of the sewer by the use of sheeting, shoring, tying-back, supporting, or temporarily suspending service of the parallel or crossing facility. The Contractor may change the proposed alignment of the sewer to avoid horizontal conflicts if the new alignment remains within the available right-of-way or easement and complies with regulatory agency requirements after a written request to and subsequent approval by the Engineer. Where the Engineer does not approve such relocation of the sewer, the Contractor shall arrange to have the utility, main, or service relocated.

2. Vertical Conflict: Vertical conflict shall be defined as when the actual vertical separation between a utility, main, or service and the proposed sewer does not permit the crossing without immediate or potential future damage to the utility, main, service, or the sewer. The Contractor may change the proposed grade of the sewer to avoid vertical conflicts if the changed grade provides minimum

required capacity, maintains adequate cover and complies with regulatory agencies requirements, after written request to and subsequent approval by the Engineer. Where the Engineer does not approve such relocation of the sewer, the Contractor shall arrange to have the utility, main, or service relocated.

D. Electronic Locator: Have available at all times an electronic pipe locator and a magnetic locator, in good working order, to aid in locating existing pipe lines or other obstructions.

E. Water and Sewer Separation:

1. Sewers should maintain a minimum 10-foot edge-to-edge separation from water mains. Where the sewer crosses a water main, an 18-inch vertical separation shall be maintained where possible. Where possible, a full joint of sewer pipe shall be centered over the water main. Any deviation shall be requested in writing to the Engineer.

2. No water main shall be permitted to pass through or come in contact with any part of a manhole.

F. Installation: The covers of all manholes shall be at least 30” above grade after installation, except in grassed/landscaped or paved areas. After completion of the manhole survey, the contractor shall submit finish grades of all manhole covers and submit with shop drawings.

G. Rock Excavation: When rock is encountered in trenches, it shall be removed to a depth of at least six inches (6”) below the pipe bell, and a width of three inches (3”) on each side of the pipe bell, except for a minimum required trench width of twenty-four inches (24”). Refer to Section 02200 for rock classification and measurement.

3.02 CONSTRUCTION ALONG HIGHWAYS, STREETS AND ROADWAYS

A. Refer to Specifications Section 01500 – Construction Facilities and Temporary Controls for requirements

3.03 PIPE DISTRIBUTION

A. Pipe shall be distributed and placed in such a manner that will not interfere with traffic.

B. No pipe shall be strung further along the route than 1,000 feet beyond the area in which the Contractor is actually working without written permission from the City. The City reserves the right to reduce this distance to a

maximum distance of 200 feet in residential and commercial areas based on the effects of the distribution to the adjacent property owners.

C. No street or roadway may be closed for unloading of pipe without first obtaining permission from the proper authorities. The Contractor shall furnish and maintain proper warning signs and obstruction lights for the protection of traffic along highways, streets and roadways upon which pipe is distributed.

D. No distributed pipe shall be placed inside drainage ditches.

E. Distributed pipe shall be placed as far as possible from the roadway pavement, but no closer than five feet from the roadway pavement, as measured edge-to-edge.

3.04 LOCATION AND GRADE

A. The slope shown on a pipeline profile and/or called for in the Specifications is the slope of the invert of the pipe.

B. Prior to clearing and grubbing, construction staking shall be performed.

C. Construction shall begin at the low end of the sewer and proceed upstream without interruption. Multiple construction sites shall not be permitted without written authorization from the Engineer for each site. At a minimum, cut sheets between construction sites shall be submitted and approved before multiple construction sites will be permitted.

D. The Contractor shall be responsible for any damage done to reference points, base lines, center lines and temporary bench marks, and shall be responsible for the cost of re-establishment of reference points, base lines, center lines and temporary bench marks as a result of the operations.

3.05 LAYING AND JOINTING PIPE AND ACCESSORIES

A. Lay all pipe and fittings to accurately conform to the lines and grades established by the Engineer.

B. <u>Pipe Installation</u>:

1. Proper implements, tools and facilities shall be provided for the safe performance of the Work. All pipe, fittings and valves shall be lowered carefully into the trench by means of slings, ropes or other suitable tools or equipment in such a manner as to prevent damage to sewer materials and protective coatings and linings. Under no

circumstances shall sewer materials be dropped or dumped into the trench.

2. All pipe, fittings and appurtenances shall be examined carefully for damage and other defects immediately before installation. Defective materials shall be marked and held for inspection by the Engineer, who may prescribe corrective repairs or reject the materials.

3. All lumps, blisters and excess coating shall be removed from the socket and plain ends of each pipe, and the outside of the plain end and the inside of the bell shall be wiped clean and dry and free from dirt, sand, grit or any foreign materials before the pipe is laid. No pipe that contains dirt shall be laid.

4. Foreign material shall be prevented from entering the pipe while it is being placed in the trench. No debris, tools, clothing or other materials shall be placed in the pipe at any time.

5. As each length of pipe is placed in the trench, the joint shall be assembled and the pipe brought to correct line and grade. The pipe shall be secured in place with approved backfill material.

6. It is common practice to lay pipe with the bells facing the direction in which work is progressing; however, it is not mandatory.

7. Applying pressure to the top of the pipe, such as with a backhoe bucket, to lower the pipe to the proper elevation or grade shall not be permitted.

8. Polyethylene Encasement: For Ductile Iron Pipe, installation of encasement, when directed by the Engineer, shall be in accordance with AWWA C105 and the manufacturer's instructions. All ends shall be securely closed with tape and all damaged areas shall be completely repaired to the satisfaction of the Engineer.

C. Alignment and Gradient:

1. Lay pipe straight in alignment and gradient or follow true curves, where shown on the Drawings, as nearly as practicable. Do not deflect any joint more than the maximum deflection recommended by the manufacturer.

2. Maintain a transit, level and accessories on the job to lie out angles and ensure that deflection allowances are not exceeded.

3. The Contractor shall check the invert elevation at each manhole and the pipe invert elevation at each bell in open cut areas of pipe installation

4. The Contractor shall check the horizontal alignment of the sewer and ground surface elevations at the same schedule as for invert elevations.

D. Expediting of Work: Excavate, lay the pipe, and backfill as closely together as possible, as determined by the Engineer. Do not leave unjointed pipe in the trench overnight. Backfill and compact the trench as soon as possible after laying and jointing is completed. Cover the exposed end of the installed pipe each day at the close of work and at all other times when work is not in progress. If necessary to backfill over the end of an uncompleted pipe or accessory, close the end with a suitable plug, either push-on, mechanical joint, restrained joint or as approved by the Engineer.

E. Joint Assembly:

1. Joints shall be assembled in accordance with the manufacturer's recommendations.

2. The Contractor shall internally inspect each pipe joint to insure proper assembly for pipe 30-inches in diameter and larger after the pipe has been brought to final alignment.

3. On reinforced concrete pipe, diameters 30-inches and larger, the Contractor shall fill the voids, on the pipe joint interior, with grout.

F. Cutting Pipe:

1. Cut ductile iron pipe using an abrasive wheel saw.

2. Cut PVC/HDPE pipe using a suitable saw.

3. Remove all burrs and smooth the end before jointing.

4. The Contractor shall cut DIP pipe and bevel the end, as necessary, to provide the correct length of pipe necessary for installing the fittings, valves, accessories and closure pieces in the correct location. Only push-on or mechanical joint pipe shall be cut. Plastic and HDPE Pipe shall be cut precisely square.

3.06 SEWER SERVICE CONNECTIONS

A. All sewer service connections shall be identified and located prior to pipe installation or replacement. The complete list of service laterals; included relevant footage and diameter of lateral shall be submitted prior to pipe installation or replacement to the Engineer for information. Upon commencement, pipe installation or replacement shall be continuous and without interruption from one manhole to another, except as approved by the Engineer and/or Engineer representative.

B. After installation or replacement of mainline sewer is complete, but prior to service reconnects, perform a CCTV inspection with a hand held ("Push") CCTV camera of all service laterals to the edge of right-of-way (ROW) or edge of easement, or as far as is feasible based on configuration or defects of laterals. The inspection shall be performed in the presence of the Engineer and/or Engineer representative. If the Engineer determines that a lateral requires replacement, the service lateral shall be replaced complete from the mainline sewer to the edge of ROW or edge of easement. If directed to do so by the Engineer, install a two-way cleanout at the edge of ROW or easement. The cleanout shall incorporate all appropriate and necessary couplings for a watertight connection to the service lateral piping.

C. Upon completion of installation of the new mainline sewer pipe, the Contractor shall complete the reconnection of all service laterals on the segment within 24-hours to minimize inconvenience to sewer customers. Exceptions to this requirement apply only to service laterals that will be replaced from the mainline sewer to the edge of ROW or easement. In these cases, services shall be reconnected within a time frame specified by the Engineer at the work site.

D. All service connections shall be made by core drilling a circular hole through the wall of the existing pipe. The hole size shall be equal to the inside diameter of the connecting piping, free of burrs or rough edges and perpendicular to the existing pipe. Installation of the saddle assembly shall be in accordance with the saddle manufacturer's recommendations and provide a watertight seal. Pipe branch connection products shall correspond to the sewer main pipe material as indicated below:

Sewer Main Material	Branch Connection Product
Ductile Iron ***	Sewer saddle equal to CB Sewer Saddle manufactured by Romac Industries.
Concrete	Sewer saddle equal to CB Sewer Saddle manufactured by Romac Industries.
Vitrified Clay ***	Sewer saddle equal to CB Sewer Saddle manufactured by Romac Industries.
PVC ***	Flexible type saddle equal to Fernco Flexible

	Tap Saddle.
HDPE	Flexible type saddle equal to Fernco Flexible Tap Saddle or electrofusion saddle equal to Central Plastics Company Electrofusion Branch Saddle.
Planned CIPP Lining	Ductile Iron Tee or Wye installed prior to lining sewer main to prevent damage to branch fitting during robotic reconnection of service lateral

*** Wye or Tee fittings shall be used in lieu of the products indicated above if the sewer main piping is installed or repaired using open cut trench methods.

E. Connections to the existing sewer house connection pipe shall be made using sleeved stainless steel flexible couplings. All flexible couplings shall conform to ASTM C 425 and shall be equal to those manufactured by Fernco Inc., DFW Plastics, Inc., or Mission Rubber Company.

F. In the event a lined pipe is encountered, the host pipe (outer) pipe material shall be used to determine the branch connection product as indicated above.

G. The slope of the existing service connection (lateral) toward the new pipe shall be maintained at the existing percent slope. Reconstructed service laterals shall be installed at a minimum slope of one percent (1%) or as specified by the Engineer.

H. For Supplemental Work Not Shown on Plans or Other Work Tables, the work item term “Rehab Lateral” shall refer to the following process:

1. The contractor shall locate the structure in the field and perform a CCTV inspection in accordance with Section 02752 Internal Sewer Condition Assessment. This item shall be paid under bid item Sewer, Internal Pipe Inspection, Service Lateral, 4” to 6” Diameter - Bid Item 4-I-6010.

2. The contractor shall review the results of the CCTV inspection with the Engineer and determine the appropriate rehabilitation method, then prosecute the rehabilitation work.

3.07 CONSTRUCTION PRACTICES FOR POLYETHYLENE PIPE

A. Handling of Pipe: Pipe shall be stored on clean, level ground to prevent undue scratching or gouging of the pipe. If the pipe must be stacked for storage, such stacking should be in accordance with the pipe manufacturer’s recommendations. The pipe should be handled in such

manner that it is not damaged by being dragged over sharp objects or cut by chokers or lifting equipment.

B. Repair of Damaged Sections: Segments of pipe having cuts or gouges in excess of 10% of the wall thickness of the pipe shall be cut out and removed. The undamaged portions of the pipe shall be rejoined using the butt fusion joining method.

C. Pipe Joining: Sections of polyethylene pipe should be joined into continuous lengths on the job site above ground. The joining method shall be performed in strict accordance with the pipe manufacturer's recommendations. The butt fusion equipment used in the joining procedure shall be capable of meeting all conditions recommended by the pipe temperature, alignment, and fusion pressure.

D. Handling of Fused Pipe: Fused segments of pipe shall be handled so as to avoid damage to the pipe. When lining fused sections of pipe, chains or cable-type chokers should be avoided. Nylon slings are preferred. Care should be exercised to avoid cutting or gouging the pipe.

E. Trenching and Backfill: All trenching and backfill shall be in accordance with Section 02200 and standard details on the Drawings and as indicated below:

1. Trench Construction: The trench and trench bottom should be constructed in accordance with ASTM D 2321 – Section 7.

2. Embedment Material: Embedment materials should be Class I, Class II, or Class III materials as defined in ASTM D 2321 – Section 6. The use of Class IV and/or Class V materials for embedment are not recommended and should be allowed only with the approval of the engineer.

3. Bedding: Bedding of the pipe should be performed in accordance with ASTM D 2321 –Section 8. Compaction should be specified in ASTMD 2321. Deviation from the specified compaction shall be approved by the engineer.

4. Haunching and Initial Backfill: Haunching and initial backfill should be as specified in ASTM D 2321- Section 9 using Class I, Class II, or Class III materials. Materials used and compaction shall be as specified by the engineer. Compaction 85% Standard Proctor Density must be maintained in unpaved areas. Paved areas will require a higher level of compaction in accordance with the pavement design criteria.

5. Special Conditions: ASTM D 2321 – Section 11.2, Minimum Cover for Load Application, Section 11.3, Use of Compaction Equipment and Section 11.4, Removal of Trench Protection, should apply unless directed otherwise by the engineer.

3.08 MANHOLE AND PRECAST CONCRETE PRODUCT CONSTRUCTION

A. Construct manholes as shown on the Drawings.

B. Precast Concrete: Handle sections carefully to prevent cracking or chipping. Provide uniform bedding of the bottom section to prevent uneven loading. Install gaskets and joint sealants in accordance with manufacturer's recommendations to produce a watertight structure.

C. Brick: Bed the bottom and sides of every brick in mortar. Apply a smooth coat of mortar, 3/4-inch thick, on the inside and outside.

D. Pipe Connections: Seal the connection between the pipe and the manhole as follows:

1. Pipe 36-Inch Diameter and Less: Connect pipe to manhole utilizing rubber boots.

2. If rubber boots are damaged, replace Type I boots with a new boot and repair Type II boots by constructing a manhole collar.

3. If preformed openings must be enlarged or altered, or if new openings must be made in the field, minimize the amount of material removed to provide closely matched surfaces for grouting.

E. Inverts: Form channels as shown on the Drawings, rounded, and troweled smooth with brick faces exposed. Maintain consistent grade through the invert.

F. Top Elevations: Build manholes outside of paved areas to 30-inches above finished grade, unless otherwise shown on the Drawings or directed by the Engineer. Build manholes in paved areas to existing grades.

G. Drop Connections: Replace existing manholes that contain drop connections, where required, with a similar drop connection. Construct drop connections of the same materials as the upstream sewer and in accordance with the details shown on the Drawings.

H. Frames and Covers: Unless frame and cover is at grade, the frame shall be cast into the cone section. Covers shall be solid, cast-iron, without ventilation holes.

I. Seal all manhole joints and lift holes, both inside and out, with grout. Between precast sections, this is in addition to joint sealant.

3.09 CONCRETE ENCASEMENT

A. Provide concrete encasement of pipe when directed by the Engineer or to protect the pipe when any one of the following conditions are encountered:

1. Pipe crosses under a creek;

2. The top of the pipe would have less than 30 inches of ground cover;

3. The trench bottom consists of unstable material.

3.10 INSPECTION AND TESTING

A. Clean and test lines before requesting final acceptance. Where any obstruction is met, clean the sewers by means of rods, swabs, or other instruments. When requested by the Engineer, flush out lines and manholes before final inspection. The costs for inspection and testing shall be included in the unit prices for pipe replacement and point repairs.

B. Alignment: Pipe lines shall be straight and show a uniform grade between manholes. Correct any discrepancies discovered during inspection.

C. Watertightness: A watertightness test shall be performed on all new sewers constructed and lined sewers (prior to cutting the liner to reinstate lateral connections) as indicated below. All visible leaks, including those found via television inspection, shall be repaired.

1. Low-Pressure Air Test: Sewer diameters less than or equal to 24-inches.

a. Prior to air testing, the section of sewer between manholes shall be thoroughly cleaned and wetted. Immediately after cleaning or while the pipe is water soaked, the sewer shall be tested with low-pressure air. At the Contractor's option, sewers may be tested in lengths between manholes or in short sections (25 feet or less) using inflatable balls pulled through the line from manhole to manhole. Air shall be slowly supplied to the plugged sewer section until internal air

pressure reaches approximately 4.3 psi. After this pressure is reached and the pressure allowed to stabilize (approximately two to five minutes), the pressure may be reduced to 3.5 psi before starting the test. If a 1.0 psi drop does not occur within the test time, then the line has passed the test. If the pressure drops more than 1.0 psi during the test time, the line is presumed to have failed the test, and the Contractor will be required to locate the failure, make necessary repairs, and retest the line. Minimum test time for various pipe sizes and types is as follows:

Nominal Pipe Size, inches	**Time (Min/100 feet)**	
	VCP, RCP	**DIP, PVC, HDPE, CIPP**
6	0.7	5.7
8	1.2	7.6
10	1.5	9.4
12	1.8	11.3
15	2.1	14.2
18	2.4	17.0
21	3.0	19.8
24	3.6	22.8

b. Required test equipment, including inflatable balls, braces, air hose, air source, timer, rotameter as applicable, cut-off valves, pressure reducing valve, 0-15 psi pressure gauge, 0-5 psi pressure gauge with gradations in 0.1 psi and accuracy of + two percent, shall be provided by the Contractor. Testing equipment shall be equal to Cherne Air-Loc Testing Systems.

c. The Contractor shall keep records of all tests made. Copy of such records will be given to the Engineer or the City. Such records shall show date, line number and stations, operator, and such other pertinent information as required by the Engineer.

d. The Contractor is cautioned to observe proper safety precautions in performance of the air testing. It is imperative that plugs be properly secured and that care be exercised in their removal. Every precaution shall be taken to avoid the possibility of over-pressurizing the sewer line.

D. <u>Deflection Test</u>:

1. All PVC pipe gravity sewers.

   a. Test PVC and gravity sewer for excessive deflection by passing a mandrel through the pipe. Deflection of the pipe shall not exceed ten percent.

   b. The mandrel size shall be based upon the maximum possible inside diameter for the type of pipe being tested, taking into account the allowable manufacturing tolerances of the pipe. The mandrel shall have an odd number of legs, or vanes, with a quantity of such equal to or greater than nine. The legs of the mandrel shall be permanently attached to the mandrel. A mandrel with variable sizes shall not be allowed. The mandrel shall be constructed of steel, aluminum or other material approved by the Engineer, and shall have sufficient rigidity so the legs of the mandrel will not deform when pulling through a pipe. The mandrel dimensions shall be checked by the Engineer before use by the Contractor.

   c. Excavate and install properly any section of pipe not passing the test. Re-test until results are satisfactory.

   d. <u>The test shall be performed twice</u>:

      1) Once within the first 30 days of installation

      2) Once during final inspection, but no sooner than 30 days after pavement backfill done, at the completion of this contract.

E. <u>Closed Circuit Television</u>: The interior of the gravity sewers shall be subjected to a televised inspection. The audio/video shall provide an audio description of what is being viewed; provide a continuous running footage indicator between manholes; and be prepared in the presence of the City's representative. Prior to Final Acceptance, the City shall be provided with one copy of the TV inspection report and video showing the entire length of gravity sewer being tested. The report shall contain the condition of pipe, type of pipe, depth, location of services, length, type joint, roundness, and distance between manholes. Any pipe found to be cracked, leaking, misaligned, bellied or otherwise defective shall be removed and replaced. CCTV inspection shall conform to the requirements of Section 02752. All costs associated with the CCTV inspection shall be considered incidental to the pipe installation work and shall be included in the unit prices.

F. Manholes:

1. The costs for vacuum testing of lined and new manholes shall be included in the unit price for the manhole work. Prior to testing manholes for watertightness, all liftholes shall be plugged with a non-shrink grout, all joints between precast sections shall be properly sealed and all pipe openings shall be temporarily plugged and properly braced.

2. Vacuum Tests: The manhole, after proper preparation as noted above, shall be vacuum tested prior to or after backfilling. The test head shall be placed at the inside of the top of the cone section and the compression head inflated to 40 psi to affect a seal between the vacuum base and the manhole structure. Connect the vacuum pump to the outlet port with the valve open. A vacuum of 10-inches of mercury shall be drawn and the vacuum pump shut off. With the valves closed, the time shall be measured for the vacuum to drop to 9-inches. The manhole shall pass if the time is greater than that specified in the table below. If the manhole fails the initial test, necessary repairs shall be made with non-shrink grout while the vacuum is still being drawn. Retesting shall proceed until a satisfactory test is obtained. Vacuum testing equipment shall be equal to that as manufactured by P.A. Glazier, Inc.

MINIMUM TEST TIMES FOR VARIOUS MANHOLE DIAMETERS AND DEPTHS			
***Depth* (feet)**	**Minimum Test Times with a 4 ft. Diameter**	**Minimum Test Times with a 5 ft. Diameter**	**Minimum Test Times with a 6 ft. Diameter**
8	20	28	33
10	25	33	41
12	30	39	49
14	35	48	57
16	40	52	67
18	45	59	73
20	50	65	81
22	55	72	89
24	59	78	97
26	64	85	105
28	69	91	113
30	74	98	121

3.11 PROTECTION AND RESTORATION OF WORK AREA

A. General: Return all items and all areas disturbed, directly or indirectly by work under these Specifications, to their original condition or better, as quickly as possible after work is started.

1. The Contractor shall plan, coordinate, and prosecute the work such that disruption to personal property and business is held to a practical minimum.

2. All construction areas abutting lawns and yards of residential or commercial property shall be restored promptly. Backfilling of underground facilities, ditches, and disturbed areas shall be accomplished on a daily basis as work is completed. Finishing, dressing, and grassing shall be accomplished immediately thereafter, as a continuous operation within each area being constructed and with emphasis placed on completing each individual yard or business frontage. Care shall be taken to provide positive drainage to avoid ponding or concentration of runoff.

3. Handwork, including raking and smoothing, shall be required to ensure that the removal of roots, sticks, rocks, and other debris is removed in order to provide a neat and pleasing appearance.

4. The Engineer shall be authorized to stop all work by the Contractor when restoration and cleanup are unsatisfactory and to require appropriate remedial measures.

B. Man-Made Improvements: Protect, or remove and replace with the Engineer's approval, all fences, walkways, mail boxes, pipe lines, drain culverts, power and telephone lines and cables, property pins and other improvements that may be encountered in the work. Fences crossing the easement shall be gated.

C. Cultivated Growth: Do not disturb cultivated trees or shrubbery unless approved by the Engineer. Any such trees or shrubbery that must be removed shall be heeled in and replanted under the direction of an experienced nurseryman.

D. Cutting of Trees: Do not cut trees for the performance of the work except as absolutely necessary. Protect trees that remain in the vicinity of the work from damage from equipment. Do not store spoil from excavation against the trunks. Remove excavated material stored over the root system of trees within 30 days to allow proper natural watering of the root system. Repair any damaged tree over 3-inches in diameter, not to be removed, under the direction of an experienced nurseryman. All trees and brush that require

removal shall be promptly and completely removed from the work area and disposed of by the Contractor. No stumps, woodpiles, or trash piles will be permitted on the work site. The Contractor may chip and grind vegetation and spread over the disturbed area if approved by the City.

E. Disposal of Rubbish: Dispose of all materials cleared and grubbed during the construction of the project in accordance with the applicable codes and rules of the appropriate City of Atlanta, state and federal regulatory agencies. All debris and rubbish from clearing operations shall be removed from site within one (1) week after cutting.

F. Swamps and Other Wetlands:

1. The Contractor shall not construct permanent roadbeds, berms, drainage structures or any other structures that alter the original topographic features within the easement.

2. All temporary construction or alterations to the original topography will incorporate measures to prevent erosion into the surrounding swamp or wetland. All areas within the easement shall be returned to their original topographic condition as soon as possible after work is completed in the area. All materials of construction and other non-native materials shall be disposed by the Contractor.

3. The Contractor shall provide temporary culverts or other drainage structures, as necessary, to permit the free migration of water between portions of a swamp, wetland or stream that may be temporarily divided by construction.

4. The Contractor shall not spread, discharge or dump any fuel oil, gasoline, pesticide, or any other pollutant to adjacent swamps or wetlands.

END OF SECTION

SECTION 02752

Internal Sewer Condition Assessment

PART 1 – GENERAL

1.01 SCOPE

A. It is the intent of this contract to assess the internal structural and service condition of sewers prior to preconditioning or rehabilitation. Assessment will be performed using pan and tilt color camera-CCTV. In those circumstances where depth of flow is too great for CCTV, sonar or a combination of sonar and CCTV shall be used.

B. It is also the intent of this contract to inspect individual sewer lines that have been preconditioned to further assess condition and record findings.

C. It is the responsibility of the Contractor to comply with OSHA regulations, the City of Atlanta's Safety Guidelines, and the City of Atlanta's Confined Space Guidelines as applicable. The Contractor shall provide written documentation that all workers have received the training required under these regulations and guidelines.

D. The form of internal condition assessment that is required as part of this Contract as follows:

1. Sewer inspection – Viewing the sewer ("pull-through") pursuant to investigative work possibly incorporating a radio-sonde transmitter for locating purposes and/or following other operational activity including:

   a. Locating manhole(s) and/or lateral(s) with or without radio-sonde

   b. Sewer preconditioning and cleaning activities

   c. Sewer rehabilitation, including point repairs

   d. Such other similar purposes as may be required by the engineer

   e. Sewer inspection shall be carried out manually or with the aid of CCTV and/or sonar equipment, to assess overall condition. No detailed data logging is required, but a report containing header information only is required.

3. Service lateral inspection – Assess and document the internal condition of all Connections and Junctions pursuant to investigative work and/or following other operational activity including:

a. Locating lateral(s) with or without radio-sonde

b. Sewer preconditioning and cleaning activities

c. Service lateral rehabilitation, including point repairs

d. Such other similar purposes as may be required by the Engineer

e. Service lateral inspection shall be carried out manually or with the aid of CCTV and/or Sonar equipment, if required by one of the four conditions above, to assess overall condition. No detailed data logging is required, but a report containing header information only is required.

1.02 SUBMITTALS

A. The Contractor shall provide to the Engineer the following information in writing prior to the set deadline, or at the indicated frequency, whichever is applicable.

Type of Submittal	Time/Frequency of Submittal
Experience Record of Contractor and/or Subcontractor(s)	**With the Bid Documents**
Listing of CCTV and SONAR Equipment	In accordance with Section 01300 - Submittals
2 Copies of CCTV and SONAR findings (2 hard copies of fully detailed logs incorporating a summary statistical breakdown of defects and main findings, 2 electronic discs of fully detailed logs and CD-ROMS of video output)	One week After Completion of Section
Daily Logs and Progress Reports	Daily
Confined Space Entry Logs	Bi-Weekly
External Hard Drive containing CCTV video, photos, and detailed logs	Contract Close-out

B. Daily reports shall be provided via e-mail to the designated engineer. Daily reports shall be provided no later than 5:00PM on the second day following the survey. Weekly reports shall be provided no later than 5:00PM on the first Monday following the week of the survey.

C. The Contractor shall complete a daily written record (diary) detailing the work carried out and any small items of work which were incidental to the contract. The Contractor shall include in his daily record, reference to:

1. Delays: e.g. Dense traffic, lack of information, sickness, labor or equipment shortage

2. Weather: conditions, e.g. rain, etc.

3. Equipment: on site, e.g. specialist cleaning, by-pass equipment, etc.

4. Submittals: to the designated engineer representative

5. Personnel: on site by name, e.g., all labor, Specialist Services, etc.

6. Accident: report, e.g. all injuries, vehicles, etc.

7. Incident: report, e.g. damage to property, property owner complaint, etc.

8. Major defects encountered, including collapsed pipe, if any: e.g. cave-ins, sink holes, etc.

9. Visitors: on site

D. The designated Engineer on site shall certify receipt of the daily record noting any items and adding any observations with reference to claims for payment to the Contractor. The Engineer may at his discretion, for which the Contractor must receive direction in writing, an exception to this requirement for weekly submission of progress rather than for daily submission.

1.03 REQUIREMENTS AND EXTENT OF INSPECTION

A. The Contractor shall inspect pipelines with color pan and tilt CCTV imagery and sonar and or combined color pan and tilt CCTV/Sonar (TISCIT) as specified so as to record all relevant features and to confirm their structural and service condition. Inspections of pipelines shall be carried out in accordance with the reporting format determined by the Engineer. A sample report sheet is attached to this specification (Attachment B) and includes the recording of both target total length of sewer inspected between manholes as well as actual length inspected.

B. All CCTV/sonar operator(s) responsible for direct reporting of sewer condition shall have a minimum of 3 years previous experience in surveying, processing, and interpretation of data associated with CCTV and sonar inspections. The Contractor shall provide the designated Engineer with written documentation that all CCTV and sonar survey operators meet

these experience requirements which shall include a list of projects undertaken as well as client name and telephone number for reference.

C. All approved Contractors will be required to provide certification that they have undergone training prior to undertaking internal condition assessment work in the City of Atlanta. Material, Shape and Lining Coding used throughout the project will conform to the attached listing (Attachment C). General inspection logging requirements are also included with this Section (Attachment D). Training will be carried out at the Contractor expense. No charge will be levied for the training, which is expected to last two days.

D. The Contractor shall complete a daily written record (diary) detailing the work carried out and any small items of work which were incidental to the Contract.

1.04 INSPECTION UNITS

A. The Contractor shall provide sufficient inspection units and all relevant ancillary equipment, including standby units in the event of breakdown, in order to complete all sewer and manhole inspections as specified.

1.05 INSPECTION VEHICLE

A. The inspection vehicle shall comprise two totally separate areas. One of these, designated as the viewing area, shall be insulated against noise and extremes in temperature, include the provision for air conditioning, and shall be provided with means of controlling external and internal sources of light in a manner capable of ensuring that the monitor screen display is in accordance with the specification. Seating accommodation shall be provided by the Contractor to enable two people, in addition to the operator, to view clearly the on-site monitor, which shall display the inspection as it proceeds.

B. The working area shall be reserved for equipment, both operational and stored, and no equipment utilized within the sewer shall be allowed to be stored in the viewing area.

C. The Contractor shall allow in the rates and provide at no additional cost, a vehicle when required by the City, together with a driver, to assist with visual reconnaissance surveys and/or inspections. The vehicle shall be suitable for carrying the survey team and laborers and shall be equipped with the following:

1. Equipment for easing and lifting manhole covers.

2. Sewer safety equipment.

3. Road safety equipment.

4. Protective clothing for the survey/inspection teams comprising coveralls, boots, gloves, hard hat etc.

1.06 CCTV INSPECTION AND OPERATIONAL EQUIPMENT REQUIREMENTS

A. The inspecting equipment shall be capable of inspecting a length of sewer at least 1500 ft. when entry onto the sewer may be obtained at each end and up to 100 ft. by rodding or up to 750 ft. where a self propelled unit is used, where entry is possible at one end only. The Contractor shall maintain this equipment in full working order and shall satisfy the designated Engineer at the commencement of each working shift that all items of equipment have been provided and are in full working order.

B. Each inspection unit shall contain a means of transporting the CCTV camera and/or sonar equipment in a stable condition through the sewer under survey and/or inspection. Such equipment shall ensure the maintained location of the CCTV camera or sonar equipment when used independently on or near to the central axis of a circular shaped sewer when required in the prime position.

C. Where the CCTV camera and/or Sonar head are towed by winch and bond through the sewer, all winches shall be stable with either lockable or ratcheted drums. All bonds shall be steel or of an equally non-elastic material to ensure the smooth and steady progress of the CCTV camera and/or Sonar equipment. All winches shall be inherently stable under loaded conditions.

D. Each unit shall carry sufficient numbers of guides and rollers such that, when surveying or inspecting, all bonds are supported away from pipe and manhole structures and all CCTV/Sonar cables and/or lines used to measure the CCTV camera's/sonar head location within the sewer are maintained in a taut manner and set at right angles where possible, to run through or over the measuring equipment.

E. Each unit shall carry a range of flow control plugs or diaphragms for use in controlling the flow during the inspection. A minimum of one item of each size of plug or diaphragm ranging from 6 inches to 2 feet diameter inclusive shall be carried.

F. Each inspection unit shall have on call equipment available to carry out the flushing, rodding and jetting of sewers as and when such procedures are deemed to be necessary.

1.07 FIELD SUPERVISION BY CONTRACTOR

A. The Contractor shall maintain on site at all times a competent field supervisor in charge of the inspection, see item 3.1 below. The field supervisor shall be approved in writing by the designated Engineer prior to commencement of Work. Any change of supervision must also be approved in writing by the designated Engineer prior to the change. The field supervisor shall be responsible for the safety of all site workers and site conditions as well as ensuring that all work is conducted in conformance with these specifications and to the level of quality specified.

1.08 APPLICATION OF INSPECTION TYPE

A. The following guidelines concerning the use of CCTV and sonar shall be followed, subject to the review and approval of the designated Engineer:

1. Generally CCTV alone shall be used for internal condition assessment where the depth of flow of sewage is less than 25% of overall sewer diameter at the start of the survey. The Contractor will make an informed decision to continue should the depth of flow increase beyond the 25% level but no greater than 40% of overall sewer diameter at any time throughout the length.

2. Generally CCTV combined with sonar shall be used for internal condition assessment where depth of flow of sewage varies from 25% to 75% of overall sewer diameter for sewers greater than 24-inches in diameter. Where the sewer is less than 24-inches in diameter and depth of flow of sewage exceeds 25% and is less than 75% of overall sewer diameter the designated Engineer shall instruct Contractor to either: (a) continue using CCTV (where depth of flow is only marginally greater than 25% of overall diameter) or (b) use sonar (by damming or plugging the sewer so that depth of flow exceeds 75% of overall diameter).

3. Generally sonar alone shall be used where depth of flow in the sewer exceeds 75% of overall diameter and the level of the flow will be artificially increased, without the risk of flooding, to ensure that the pipe is completely surcharged.

PART 2 – PRODUCTS (Not Used)

PART 3 – EXECUTION

3.01 CLEANING PRIOR TO INTERNAL CONDITION INSPECTION

A. Where required by the City and only when instructed in writing, the Contractor shall clean the sewer prior to internal condition inspection. Cleaning shall be carried out in conformance with Section 02511 – Preconditioning and Cleaning of Manholes and Sewers.

3.02 SEWER CLEANING UNITS AND EQUIPMENT

A. The Contractor shall provide sufficient sewer cleaning units and equipment, including standby units in the event of breakdown, in order to complete cleaning operations as specified.

3.03 CCTV/SONAR – GENERAL

A. CCTV Camera/Sonar Head Prime Position: The CCTV camera/sonar head shall be positioned to reduce the risk of picture distortion. In circular sewers the CCTV camera lens and/or sonar head shall be positioned centrally (i.e. in prime position) within the sewer. In non- circular sewers, picture orientation shall be taken at mid-height, unless otherwise agreed, and centered horizontally. In all instances the camera lens/sonar head shall be positioned looking along the axis of the sewer when in prime position. A positioning tolerance of ± 10% of the vertical sewer dimension shall be allowed when the camera is in prime position.

B. CCTV Camera/Sonar Head Speed: The speed of the CCTV camera in the sewer shall be limited to 8 inches per second for surveys to enable all details to be extracted from the ultimate CD-ROM recording. Similar or slightly higher speed as agreed by the designated Engineer shall be provided for inspections. The speed of scanning sonar shall be limited to 4 inches per second.

C. CCTV Color Camera: The Contractor shall provide a color pan and tilt camera(s) to facilitate the survey and inspection of all laterals, including defects such as hydrogen sulfide corrosion in the soffit of sewers and benching or walls of manholes over and above the standard defects that require reporting, where required by the designated Engineer. These will be carried out as part of the normal CCTV assessment as the survey or inspection proceeds when instructed by the designated Engineer. A 360˚ rotational scan indicating general condition must be implemented at every 50 feet interval (min.) along sewers, and at manholes and any salient, specified, defect features. The tilt arc must not be less than 225°.

D. Linear Measurement:

1. The CCTV/Sonar monitor display shall incorporate an automatically updated record in feet and tenths of a foot of the footage of the camera or center point of the transducer, whichever unit is being metered, from the cable calibration point. The relative positions of the two center points should also be noted.

2. The Contractor shall use a suitable metering device, which enables the cable length to be accurately measured; this shall be accurate to ±1% or 3 inches whichever is the greater.

3. The Contractor shall demonstrate compliance with the tolerance in Sub-clause 3.7 D.2 is being complied with, using one or both of the following methods in conjunction with a linear measurement audit form which shall be completed each day during the survey:

a. Use of a cable calibration device

b. Tape measurement of the surface between manholes

A quality control form will be completed and submitted by the Contractor depicting the level of accuracy achieved.

4. If the Contractor fails to meet the required standard of accuracy, the designated Engineer shall instruct the Contractor to provide a new device to measure the footage. The designated Engineer retains the right to instruct the Contractor in writing, to re-survey those lengths of sewer first inspected with the original measuring device using the new measuring device.

E. Data Display, Recording and Start of Inspection:

1. At the start of each sewer length being inspected and each reverse set-up, the length of pipeline from zero footage, the entrance to the pipe, up to the cable calibration point shall be recorded and reported in order to obtain a full record of the sewer length. Only one survey shall be indicated in the final report. All reverse set-ups, blind manholes, and buried manholes shall be logged on a separate log. Video digits shall be recorded so that every recorded feature has a correct tape elapsed time stamp. Each log shall make reference to a start (ST) and finish (FH) manhole unless abandonment took place because of blockage. Manhole number shall be indicated in the remark's column of the detail report. Inspections must not extend over 2 CD-ROMs.

2. The footage reading entered on to the data display at the cable calibration point must allow for the distance from the start of the inspection to the cable calibration point such that the footage at the start of the survey is zero.

3. In the case of inspecting through a manhole where a new header sheet must be completed, the footage shall be set at zero with the camera focused on the outgoing pipe entrance.

4. At the start of each manhole length a data generator shall electronically generate and clearly display on the viewing monitor and subsequently on the CD-ROM recording a record of data in alpha-numeric form containing the following minimum information:

a. Automatic update of the camera's footage position in the sewer line from adjusted zero

b. Sewer dimensions

c. Manhole/pipe length reference numbers

d. Date of inspection

e. Road name/location

f. Direction of inspection

g. Time of start of inspection

h. Sewer use (S-Sanitary Sewer, C-Combined Sewer, etc)

i. Material of construction of the pipe

5. The size and position of the data display shall be such as not to interfere with the main subject of the picture.

6. Once the survey of the pipeline is under way, the following minimum information shall be continually displayed:

   a. Automatic update of the camera's footage position in the sewer line from adjusted zero (see Sub-clause E4)

   b. Sewer dimensions in inches

   c. Manhole or pipe length reference number (PLR). General convention allows upstream manhole number to be designated PLR

   d. Direction of survey, i.e., downstream or upstream

7. Correct adjustment of the recording apparatus and monitor shall be demonstrated by use of the test tape or other device approved by the Contractor. Satisfactory performance of the camera shall be demonstrated by the recording of the appropriate test device at the commencement of each day for a minimum period of 30 seconds.

8. Footage and corresponding time elapsed video digit shall be given throughout inspection for all construction features encountered unless otherwise agreed.

9. Where silt encountered is greater than 10 percent of the diameter of the pipe, the depth of silt shall be measured and recorded at approximately 50-foot intervals.

10. CD-ROM capacity shall be adequate to record two hours of video inspection. Recording of a single segment shall not extend over more than one CD-ROM. No unrecorded gaps shall be left in the recording of a segment between surveys/inspections as the original video tape.

11. Only segments between manholes on the same sewer reach or basin shall be included on one CD-ROM. There shall be no “split surveys” or “split-basins” between CD-ROMs.

12. All continuous defects shall incorporate a start and finish abbreviation in the log report

F. Coding: Material, Shape, and Lining Coding, and conventions used throughout the project will be provided by the designated Engineer. See Attachments to this Section. The CCTV Contractor must ensure that all operators conform to the detailed requirements of the reporting procedure concerning feature description and feature definition as well as the Sewer1.Dat computer file format attached. An example Sewer1.Dat Data File has also been provided in Attachment E.

3.04 CCTV AND SONAR SURVEY DATA SPECIFICATION

A. CCTV Reporting:

1. No later than fourteen days following the completion of a pipeline inspection, Contractor shall submit to the Engineer two hard copies of all details, i.e. typed “Full English” reports including two floppy diskettes containing the data transfer file and two CD-ROM’s shall be submitted to the designated Engineer. The supplied data and information shall remain the property of the City.

2 The report shall be computer validated using AMPS/EXAMINER software, or equivalent approved by the designated Engineer, and presented on two floppy diskettes to provide a summary listing of the number and type of features including defects found for each section of pipeline. The report format is shown in the attached specimen report. This specimen report sheet shall be accurately and fully adopted in style, format and in detail.

3. When requested, the Contractor shall provide hard copy output or manually completed site coding sheets at the time of the inspection and shall forward copies of these sheets to the designated Engineer, preferably each day, but at least every other day, together with a daily report on progress.

4. Inspection reports shall contain all header information. A summary observation shall be included as a comment in the header indicating the general condition of the segment for which the inspection was required. The detailed section of the report will include coding for the for the start (ST), manhole (MH), water level (WL), finish manhole (MH) where appropriate, and finish (FH) or survey abandoned (SA)

as appropriate, together with all the supplemental information otherwise required for the “survey”.

B. Site Coding Sheets: Each sewer length, i.e. the length of sewer between two consecutive manholes, shall be entered on a separate coding sheet or entered separately electronically. Thus where a Contractor elects to "pull through" a manhole during a CCTV and/or Sonar inspection a new coding sheet shall be started at the manhole "pulled or walked through" and the footage re-set to zero on the coding sheet. Where a length of sewer between consecutive manholes is inspected from each end (due to an obstruction) two coding sheets should be used. Where a length of sewer between two consecutive manholes cannot be inspected or attempted for practical reasons a (complete header) coded sheet shall be made out defining the reason for abandonment. At uncharted manholes a new coding sheet must be started and the footage re-set to zero.

C. Measurement Units: All dimensions shall be in feet and inches. Measurement of sewers shall be to the nearest inch.

D. CCTV Photographs:

1. Photographs shall be taken of all defective laterals and pipeline defects where requested in writing. Where a defect is continuous or repeated the photographs shall be taken at the beginning of the defect and at not less than 10 foot intervals thereafter. Where photographs are not otherwise required a general condition photograph shall be taken not more than 50 feet after the previous photograph.

2. CCTV Photographs must clearly and accurately show what is displayed on the monitor, which shall be in proper adjustment.

3. Photographs must be durable and 3"x5" size and shall be supplied in a suitable album or storage drawer the standard of which shall be to the satisfaction of the designated Engineer.

4. Still photographs shall be durable and clearly identified in relation to the photograph number (cross referenced to the site survey sheet) street location, sewer dimensions, manhole start and finish numbers, survey direction, footage and date when the photograph was taken.

5. The annotation shall be clearly visible and in contrast to its background, shall have a figure size no greater than 14 point, and be type printed in upper case.

6. The annotation shall be positioned so as not to interfere with the subject of the photograph.

7. The Contractor shall provide color photographs using digital camera or such other mutually agreed upon hard copy color image together with electronic copy.

E. Control Sample Photographs and/or CD-ROMs: The designated Engineer may issue a written instruction to the Contractor to provide a sample of the photographs and/or CCTV/Sonar video taken during the contract period which the Contractor shall provide within 5 working days of receiving the written instruction.

3.05 SERVICE LATERAL INSPECTION DATA SPECIFICATION

A. For service line inspections launched from the mainline during a mainline inspection:

1. Contractors will assess and document the internal condition of all Connections and Junctions using the previously described procedures, with the exception of ending abandoned service line inspections launched from the mainline. Use “GOA” to note abandonment.

2. A number will be entered into the “Photo No.” field that represents a sequential numbering of the services found. The services will be numbered 01, 02, 03, etc. When the inspection is a reverse setup and the number of services has not exceeded 50, the numbering shall begin with 51 on the reverse. (It is unlikely that there will be more than 50 services on the first survey that is abandoned, however, should this occur, numbering shall continue on the reverse with the same sequence begun on the first survey.)

3. The end of the inspection of the service line at the property line shall be entered “GO” (General Observation code), along with the service line number in the “Photo No.” column, and the distance to the end of the survey in the “Remarks” column. The “Distance” will also be the same as for the Connection or Junction. When a survey is abandoned, the code “GOA” shall be used and the reason for the abandonment stated in the “Remarks” column.

4. Measurements shall be taken from the wall of the mainline pipe.

B. For service line inspections conducted from a cleanout (or as a separate inspection launched from the mainline), the inspection shall be recorded as a normal mainline inspection with the following exceptions:

1. When the mainline is inspected or surveyed, all services shall be numbered using a number in the “Photo No.” field, as explained above.

2. The “Start Manhole” shall be entered as the upstream manhole followed by “_01”, “_02”, etc. Where the “_01” corresponds to the service number assigned when the mainline was surveyed.

3. The upstream manhole shall be entered as the PLR.

4. The “Address” shall be the address of the house connected by the service line.

5. If the inspection begins at a cleanout, the “Direction” is entered as “D”. If the inspection begins from the mainline, the “Direction” is entered as “U”.

6. “=Service Line=” shall be entered in the “Location Details” field.

3.06 CCTV/SONAR PERFORMANCE

A. Color CCTV/Sonar: All CCTV and/or Sonar work shall use color CCTV/sonar reproduction.

B. CCTV Picture Quality:

1. An approved test device shall be provided and be available on site throughout the Contract, enabling the tests specified in this clause to be checked.

2. The test card shall be Marconi Regulation Chart No. 1 or its approved derivatives with a color bar, clearly differentiating between colors, with no tinting, to show the following: White, Yellow, Cyan, Green, Magenta, Red, Blue, and Black.

3. At the start of each and every working shift, the camera shall be positioned centrally and at right angles to the test card at a distance where the full test card just fills the monitor screen. The Contractor shall ensure that the edges of the test card castellations coincide with the edges of the horizontal and vertical scan (raster). The card shall be illuminated evenly and uniformly without any reflection. The illumination shall be to the same color temperature as the color temperature of the lighting that recorded for subsequent use by the designated Engineer, the recording time to be at least 30 seconds. The type of camera used is to be identified on the test recording. The recording must show the camera being introduced into the test device and reaching its stop position. Other test devices may be

used subject to approval by the designated Engineer. Test recordings shall also include the time and date of the recording. Test recordings shall be delivered to the Engineer on a weekly basis. The test recordings may be delivered on VHS tape or CD-ROM.

4. The electronic systems, television camera and monitor shall be of such quality as to enable the following to be achieved:

C. Shades of Gray: The gray scale shall show equal changes in brightness ranging from black to white with a minimum of five clearly recognizable stages.

D. Color: With the monitor adjusted for correct saturation, the six colors plus black and white shall be clearly resolved with the primary and complementary colors in order of decreasing luminance. The gray scale shall appear in contrasting shades of gray with no tint.

E. Linearity: The background grid shall show squares of equal size, without convergence/divergence over the whole of picture. The center circle shall appear round and have the correct height/width relationship (± 5%).

F. Resolution: The live picture must be clearly visible with no interference and capable of registering a minimum number of TV lines/pictures height lines. The resolution shall be checked with the monitor color turned down. In the case of tube cameras this shall be 600 lines.

G. Color Constancy: To ensure the camera shall provide similar results when used with its own illumination source, the lighting shall be fixed in intensity prior to commencing the survey. In order to ensure color constancy, generally no variation in illumination shall take place during the survey.

1. The Contractor shall note that the designated Engineer may periodically check both the live and picture color consistency against the color bar. Any differences will require re-survey of the new length or lengths affected, at the Contractor's expense.

H. CD-ROM Labeling:

1. . CD-ROM playback imaging shall be linked to electronic out put of alpha-numeric data so that if necessary direct interrogation of database can take place with simultaneous viewing of CCTV/sonar images.

2. Each CD-ROM disc shall be labeled by reference to the header record for the survey section completed together with the following information:

a. Client Name: "City of Atlanta"

b. Project Name

c. Contractor's Name

d. Contractor's logo is optional

e. Survey date(s)

f. Survey Method: "CCTV – Internal Sewer Condition Assessment"

g. CD Volume Label – "XXXXXXYYZZTT", where:

i. XXXXXX is the Sewershed abbreviation, as provided by the City

ii. YY is the Company abbreviation, as provided by the City

iii. ZZ is the unique crew leader initials

iv. TT is a sequence number maintained for the crew leader

h. Video Filename(s): Alphanumeric using any convention. Filename is to be included in the header field as specified. Filename is limited to 5 characters (e.g. "00001" to "00004")

I. CCTV Focus/Iris/Illumination: The adjustment of focus and iris shall allow optimum picture quality to be achieved and shall be remotely operated. The adjustment of focus and iris shall provide a minimum focal range from 6 inches in front of the camera's lens to infinity. The distance along the sewer in focus from the initial point of observation shall be a minimum of twice the vertical height of the sewer. The illumination must allow an even distribution of the light around the sewer perimeter without the loss of contrast picture, flare out or shadowing.

J. Sonar Survey Requirements:

1. Rates shall allow for:

a. Complete structural and service assessment to the equivalent standard as that obtained through conventional CCTV imagery

b. The means of attenuating flow, where necessary, to facilitate appraisal of the full sewer cross section

c. Measurement of flow depth and silt depth.

2. Rates shall allow for continuous output on conventional annotated CD-ROM format of all sewers surveyed, supported by complete

defect code sheets. Additionally, silt levels shall be assessed as a percentage depth of sewers at 25 foot intervals for each pipeline surveyed. To facilitate this requirement, and in addition, to assist in diametrical measurement particularly where a sewer is deformed and/or where a sewer has suffered hydrogen sulfide corrosion; screen graphic facilities shall be made available to enable measurements to be taken in any position across the diametrical profile of the sewer as the sonar survey proceeds and where specifically directed by the designated Engineer.

3. Where combined CCTV and Sonar imagery is required the output shall display combined CCTV and Sonar images of the sewer being surveyed. The sonar image shall be superimposed on the real CCTV image as a combined operation.

4. Rates shall allow for a comprehensive final report on the findings concerning major defects, including fractures, displaced joints, deformation, corrosion and lateral intrusions, as well as dominant surface features, including encrustation and silt depths.

5. The monitor display resolution shall be a minimum of 512 x 512 pixels. The color palette shall have a minimum of 16 colors with text.

6. The picture update speed shall not compromise compliance with Sub-clause A (1) or result in unsatisfactory picture resolution.

7. The range of resolution shall be ± 1/10 inch.

8. The maximum beam width of sonar energy pulse shall be no greater than 2 degrees from the center of the transducer.

9. The transducer shall be of the continuous scanning type.

K. <u>Contractor's Data Quality Control Procedure</u>:

1. The Contractor shall operate a quality control system, to be approved by the designated Engineer, which will effectively gauge the accuracy of all survey reports produced by the operator.

2. The system shall be such that the accuracy of reporting is a function particularly of:

   a. The number of faults not recorded (omissions).

   b. The correctness of the coding and classification of each fault recorded.

3. The minimum levels of accuracy to be attained under the various survey headings are as follows:

   a. Header Accuracy 95%

   b. Detail Accuracy 85%

L. The Contractor's data quality control program shall include routine outside auditing of the work completed by a qualified subcontractor. The qualified subcontractor shall meet the minimum specified Contract requirements for the performance of the work and shall be approved in writing by the Engineer. The accuracy of the Contractor's data shall be based on the percentage of the data confirmed correct by the subcontractor. The minimum acceptable accuracy of the data shall be 85%. The general sequence of the auditing shall be as follows:

1. The Engineer shall randomly select one day per month, typically in the first week of the month, and the work performed during this day shall be reviewed and/or repeated by the qualified subcontractor.

2. If the work is greater than or equal to 85% accurate, no further outside auditing will be required for the month unless requested by the Engineer at his sole discretion. The cost for this audit is included in the allowances specified in the Bid Form.

3. If the work is less than 85% accurate, the Contractor shall at his own expense repeat and/or correct the work and have the work re-audited by the qualified subcontractor.

4. If this work is still less than 85% accurate, the Contractor shall repeat and/or correct and have the work re-audited, at his own expense, until the work is greater than or equal to 85% accurate.

5. When this re-audited work is found to be greater than or equal to 85% accurate, the Contractor shall have the work of another randomly selected day in the same month reviewed and/or repeated by the qualified subcontractor at the Contractor's own expense.

6. Steps 2 through 5 shall be repeated at the Contractor's own expense until the selected day is 85% accurate on the initial audit.

7. The occurrence of five randomly selected days not achieving 85% accuracy on initial subcontractor review will constitute cause for dismissal.

8. If the Contractor successfully meets the 85% accuracy requirement for the initial randomly selected day for two consecutive months

(Step 2 above), the Contractor may subsequently audit one day every other month. The Contractor may continue auditing one day every other month until the initial randomly selected day does not meet 85% accuracy, at which time it must resume auditing one day every month.

3.07 COLLAPSED SEWERS/DEFECTIVE MANHOLES

A. Any sewer found with greater than 10% deformation (i.e. collapsed or near to collapse) must be reported to the designated Engineer immediately for remedial action. In the event of emergency phone (404)- 546-3700.

B. Any manhole found broken, cracked, with missing covers or surcharged, must be reported to the designated Engineer immediately for remedial action. In the event of emergency phone (404)- 546-3700.

C. Any sewer found where the existing conditions pose a threat of personal injury to the public, such as a collapsed sewer with attendant depression to roadway, must be protected by the Contractor until the Engineer arrives at the job site. In the event of emergency phone (404)-546-3700.

D. Any manhole found where the existing conditions pose a threat of personal injury to the public, such as broken, cracked or missing covers or covers found in traveled portions of any sidewalk or roadway must be protected by the Contractor until the Engineer arrives at the job site. In the event of emergency phone (404)-546-3700.

3.08 TRAFFIC CONTROL

A. Refer to Specification Section 01550 Traffic Regulations for requirements.

ATTACHMENT A

DEFINITIONS

[This page intentionally left blank]

DEFINITIONS

Notes:

- Features that are visible in the sewer during surveys/inspections and other key items are defined below.
- Sewer defects are categorized under the following headings: Structural, Service, Protective Lining, and Constructional.
- Normal parts of speech abbreviations apply (e.g., (n) for noun, (v) for verb, etc.)

Sewer Defects - Structural

Angular Joints: Adjacent conduit sections are angularly displaced at the joint.

Break: Pieces of the sewer conduit are noticeably displaced, differentially, and some pieces could be missing. A broken sewer is the most structurally serious defect. A hole in the fabric of the sewer is also classified as broken. A chipped sewer wall is not coded as broken, but should be entered into the "general comments" section of the coding sheet as such.

Crack: Crack line visible on the sewer wall, with the pieces of the wall still in place. The crack may be either longitudinal (i.e., following the longitudinal axis of the sewer), circumferential (i.e., around the periphery of the sewer), or spiral (i.e. helically around the sewer). Cracks are not themselves serious defects, but are indicative of the initial stages of sewer deterioration. Multiple cracks are a combination of both longitudinal and circumferential cracks.

Collapse: Structural integrity of the sewer conduit has been completely lost and deformation is greater than 10 percent. Percentage loss of cross-section is estimated to the nearest 5 percent.

Corrosion: The destruction of a cementitious or metal wastewater component and its material properties, because of a reaction with its surroundings (the sewage environment). Corrosion is usually a defect observable specifically in the soffit, and generally above the springings of the sewer conduit and in the proximity of force main discharges. Four levels of corrosion are identifiable:

- *Light Corrosion* is characterized by a slightly depressed pH (<6.0), and a concrete surface that can be penetrated with a sharp instrument under moderate hand pressure with the removal of some concrete material. The original concrete surface is fully recognizable and aggregate may or may not be exposed.

- *Moderate Corrosion* is characterized by some concrete loss with aggregate slightly exposed, but the original concrete surface is still distinguishable. The surface may have a thin covering of pasty material that is easily penetrated. There is generally a depressed wall pH (<5.0).

- *Severe Corrosion* is characterized by significant measurable concrete loss or active corrosion. Aggregate and, occasionally, reinforcing steel is exposed. The original concrete surface is not distinguishable. The surface is covered with soft, pasty corrosion products where active scouring is not present. There is generally a depressed wall pH (<0.3) indicating active corrosion.

- *Extreme Corrosion* is characterized by corrosion so extensive that the wall of the sewer has been completely corroded and earth can be observed behind the sewer wall.

Normal pH ranges (around 6.0) are applicable. A normal concrete surface is defined as that which cannot be penetrated or removed by a sharp instrument under moderate hand pressure. The surface of the concrete may have biological growth (slime build) and moisture but the concrete is normal and aggregate is not exposed.

Deformation: A measure of the vertical and horizontal reduction or change in cross-section of a sewer as a result of self-weight or external forces. Three levels of deformation are normally reported. These are:

- 0-5 percent deformation is acceptable, may not need structural upgrading, and normally may require periodic monitoring.

- 5-10 percent deformation requires some form of structural enhancement, possibly a lining;

- >10 percent deformation is a collapse condition and the sewer needs replacing.

Brick sewers may have some irregular or misshapen cross-sections built into the original sewer. Plastic pipes can deform without structural defects. Normally a built-in deformation of 6 percent is allowable in plastic sewers.

For inspection purposes, deformation is normally recorded to the nearest 5 percent.

Fracture: Wall of sewer visibly separated along the length and/or circumference of the sewer with the pieces of the sewer wall in place. The fracture may be either longitudinal (i.e., following the longitudinal axis of the sewer), circumferential (i.e., around the periphery of the sewer, or spiral (i.e. helically around the sewer). The sewer may be seen to suffer from some distortion. The defect is indicative of the secondary stage of sewer deterioration and constitutes a more serious problem than a crack. Multiple fractures are a combination of both longitudinal and circumferential fractures.

Offset (Displaced) Joint: Adjacent conduit sections are not concentric at the joint. Displacements are recorded as a fraction of the wall thickness of the conduit (t) as follows:

- *slight* - < t
- *medium* - 1 < t < 1.5
- *large* - > 1.5 t

Separated (Open) Joint: Adjacent conduit sections are open at the joint. Displacements are recorded as a fraction of the wall thickness of the conduit (t) as follows:

- *slight* - < t
- *medium* - 1 < t, 1.5
- *large* - 1.5 t

Surface Damage: Surface of sewer conduit is damaged by spalling, wear, erosion, or any other deleterious mechanism other than corrosion (see **Corrosion**).

Sewer Defects - Service

Debris: Obstructions in a sewer line, excluding items mechanically attached to the line such as protruding service connections, protruding pipe and joint materials. Percentage loss is normally given to the nearest 5 percent. (See also Silt)

- Debris is normally identified by the following characteristics:
- *Debris.* Pebbles, pieces of concrete, wood chippings, sticks, brick, and other extraneous material that could cause turbulence and/or reduction in hydraulic capacity
- *Ragging*. Paper and sanitary products

Encrustation: Mineral deposits left on the wall or joint of a sewer by the effect of infiltrating groundwater containing dissolved salts. Normally described as being light, medium, or heavy, and characterized by loss of percentage cross-sectional area, thus:

- light - < 5 percent
- medium - > 5 loss < 20 percent
- heavy > 20 percent loss

Ground Water Infiltration: Water entering sewers and manholes via defective joints and connections, broken pipes, fractured manholes, etc., due to the effects of a high ground water table. Various levels of ground water infiltration are identified, namely as follows:

- Weeper - The slow ingress of infiltration through sewer/manhole joints or structural defects, identified by glistening effect of the water under the influence of survey lighting apparatus

- Dripper - Infiltration characteristically dripping into the wastewater system through sewer/ manhole joints or structural defects

- Runner - Infiltration running into the wastewater system through sewer/manhole joints or structural defects

- Gusher - Infiltration rapidly entering the wastewater system under hydrostatic pressure through sewer/manhole joints or structural defects

Line Deviation: Vertical or horizontal divergence of alignment of sewer conduit line encountered during inspection, also known as "change in direction" or "change in alignment."

Obstruction:An obstruction in the sewer conduit resulting in stoppage of the inspection or survey. Obstructions can be:

- *General*, e.g., shopping cart, ball, or rock
- *Mechanical*, e.g., water main installed through sewer
- *Structural*, e.g., support mechanism such as a pile or tie back anchor
- *Strata*, e.g., rock or stone which has become dislodged and fallen onto the invert

Roots: Intrusion of roots through defects in sewer conduits, laterals, or manholes. Described as fine, medium, or tap roots, depending on severity as follows:

- *Fine roots:* slender or thin fibrous roots that partially result in a reduction in flow capacity
- *Medium roots:* mass of fine roots less than 50% of the area of the pipe
- *Tap roots:* individual root strands more than 1/2 inch thick.
- Ball roots: mass of roots more than 50% of the area of the pipe

Silt: Any and all solid or semi-solid materials, including fine and granular material such as sand, grit, gravel and rock, as well as grease, sludge, slime, debris or any other loose material or encrustation lodged in the manhole or sewer.

Water Level: The depth of water at the observed point in the sewer conduit, in percentage to nearest 5 percent.

Sewer Defects - Protective Lining

Blister: A concentrated swelling of the *protective coating* over the host conduit.

Bulge: A concentrated swelling of the *protective liner* over the host conduit.

Degradation: Break down by biological action of the protective liner, protective coating, or host conduit.

Delamination: Separation of internal layers of the protective lining material. Loss of internal bonding, chemical or mechanical.

Detached: Extensive separation of the protective lining material or protective coating from the host conduit.

Missing: Where the sewer conduit has no protective coating or protective lining through the sewer conduit as indicated on as-built drawings, or on job files.

Tear: When the protective lining has become torn.

Weld Failure: The opening up of the weld between adjacent pieces of protective lining due to physical or chemical breakdown.

Wrinkle: The incorporation of a longitudinal or circumferential fold, typically in a CIPP lining due to stretching or excessive material. Normally the wrinkle should not exceed more than 1 percent of diameter for protective linings equal to or greater than 24 inches, and more than 2 percent of diameter for protective linings in sewers less than 24 inches. (Establish using 3-dimensional templates or similar.)

Sewers - Construction

Battens: Anchoring strips used to attach PE, PVC, or HDPE liners to the host sewer conduit (the sewer being treated) or annulus grout. Battens are normally made of plastic or stainless steel.

Buried Manhole: A manhole on a sewer, which is not visible at ground surface. A buried manhole may or may not be designated for assessment.

Chimney: The cylindrical, variable height access portion of the manhole structure. The chimney extends from the top of the corbel above the manhole chamber to the base of the manhole frame, and is used for adjusting the finished level of the manhole frame.

Coal Tar Epoxy:A chemically cured, two component coal tar coating which has been in use since the 1950's. In order to be successful as a coating, the surface preparation has to be of a very high order that is difficult, if not impossible, to achieve in the context of sewer conduits.

Connection: A sewer tap including break-in/hammer tap or saddle connection, of lateral sewer to another sewer.

Construction Exit: A stone-stabilized pad located at any point where traffic will be leaving a construction site to a public right-of-way, street, alley, sidewalk, or parking area.

Corbel or Cone: That portion of a manhole structure that slopes upward and inward from the barrel of the manhole to the frame diameter or required chimney (access shaft). Corbel refers to the oversailing brickwork that supports the cover and frame. Cone refers to a precast section.

Critical Path Method (CPM): A planning and scheduling technique involving the charting of all events and operations to be encountered in completing a given process, rendered in a form permitting determination of the relative significance of each event and establishing the optimum sequence and duration of operations.

Crown: The external elevation at the top of the sewer conduit (see also **Invert, Soffit**).

Cured-in-Place (CIPP): A pipe rehabilitation system in which the flexible lining (either epoxy resin or polyester resin) impregnated felt is water or air inverted or winched and inverted into an existing sewer and subsequently heat cured. The reformed pipe fits snugly into, and follows closely, the contours of the existing (host) pipe. The work also involves the reconnection of the existing sewer service property connections and television inspection of the lined pipeline.

Designated Manhole (s): Manholes identified by Engineer to be assessed.

Drop Pipe: The pipe that vertically connects the upstream sewer conduit to the invert of the through flow channel in a manhole. The drop pipe is strapped to the inside of the manhole, or surrounded in concrete if immediately outside the manhole.

Float: Float or slack time associated with one chain of activities is defined as the amount of time between earliest start date and latest start date or between earliest finish date and latest finish date for such activities, as calculated as part of the accepted Schedule Submittal.

Flow bypass: The transfer of flow from an upstream section or segment of sewer to the same sewer downstream (generally downstream of the section being rehabilitated) via temporary piping. Generally flow bypass and diversion pumping may be described as the efficient and effective installation and operation of bulkheads, plugs, hoses, piping, and pumps to maintain sewage flow and prevent backup, spillage, flooding or overflow.

Flow diversion: The transfer of sewage from an upstream section or segment of the originating sewer to another sewer. The flow is generally not returned to the originating sewer but may in some cases be transferred to another service area. Generally flow bypass and diversion pumping may be described as the efficient and effective installation and operation of bulkheads, plugs, hoses, piping, and pumps to maintain sewage flow and prevent backup, spillage, flooding or overflow.

Fold and Form Pipe: A pipe rehabilitation system in which the plastic pipe (either PVC or HDPE) is manufactured in folded shape of reduced cross-sectional area and is pulled into an existing sewer and subsequently expanded with pressure and heat. The reformed pipe fits snugly into and follows closely the contours of the existing (host) pipe.

HDPE Liner: The high density polyethylene (HDPE) pipe or sheeting that is used to renovate sewer conduits subject to structural and corrosive defects.

Hobas Pipe: Proprietary Glass Fiber Pipe used for sewer conduit renovation purposes.

Invert: The internal elevation at the bottom of the sewer (see also **Soffit, Crown**).

Joints: The means of connecting sectional lengths of sewer pipe into a continuous (flexible jointed or articulated) sewer line using various types of jointing materials. The number of joints depends on the lengths of the pipe sections used in the specific sewer construction work. See pipe manufactures catalogue.

Junction: A factory-made tap.

Junction Box: A subsurface structure normally constructed in reinforced concrete in which two or more sewer conduits meet.

Lateral: Building or house service connection to sewer or sewer to sewer connection.

Lining: (n) Also termed "insitu lining," is an internal lining material applied to the wall of an existing sewer for structural and/or protective reasons. (v) Active renovation (i.e., by insertion) of a prefabricated lining into an existing sewer.

Manhole: A subsurface structure in which two or more pipes meet, with person access from the ground surface.

Manhole Structure: Reference to and all activities relevant to manhole structures throughout the text shall also be taken to include junction boxes, inspection chambers, drop shafts, sumps, and all other auxiliary structures appurtenant to the sewerage system.

Mapped Manhole: A manhole that appears on the City's sewer system map. A mapped manhole may or may not be designated for assessment.

Cured-In-Place Pipe (CIPP): A system by which a burster unit splits the existing pipe while simultaneously installing a new polyethylene pipe. The new pipe may be of the same size or larger size. The work also involves the reconnection of the existing sewer service property connections and television inspection of the polyethylene pipe.

***Raised manhole**: A manhole in which the cover and frame are above normal levels above ground, i.e., more than 30-inches above ground level. A raised manhole may or may not be designated for assessment.*

Schedule of Record: The Schedule of Record will be the Official Project Schedule for this Contract. All updates and/or revisions relating to coordinating the Work, scheduling the Work, monitoring the Work, reviewing the progress payment requests, evaluating time extension requests, and all other objectives shall be made to this Schedule. No other schedule will be recognized for this Contract.

Sewer Inspection: Viewing the sewer pre- or post preconditioning and/or pre-or post rehabilitation with the aid of CCTV and/or sonar equipment, and/or manually, to assess overall condition. No data logging is required.

Sewer Survey: Viewing the sewer with the aid of CCTV and/or sonar equipment, and/or manually, to assess internal structural and/or service condition as well as assess the structural and/or service condition of laterals. Data logging is required.

Soffit: The internal elevation at the top of the sewer (see also **Crown, Invert**).

Stream crossing: A temporary structure installed across a perenial or nonperenial stream or watercourse for use by construction equipment. Stream crossing shall be in accordance to detail in the Contract Arawings and the Georgia Erosion and Sedimentation Act of 1975 and its amendments.

Tap (Connection): Factory tap, break-in/hammer tap or saddle connection of lateral sewer to another sewer.

Through Flow Channel: The channel that passes sewage directly through the (concrete) manhole base from the upstream sewer to the downstream sewer, also called the manhole invert.

T-Lock: HDPE sheeting used specifically for protecting sewer conduits against corrosion.

***Unburied Manhole**: A manhole on a sewer to be assessed formerly buried below ground surface. An unburied manhole may or may not be designated for assessment*

Unmapped Manhole: A manhole not included on the City's sewer system map. An unmapped manhole is also known as an uncharted manhole.

Wet Well: The wet side or inlet side of a wastewater pumping station.

Sewers - General

Abrasion: Hydraulic wear or scour on the wall of a sewer, through-flow channel or manhole wall.

Above Ground Sewer (Aerial Sewer): An unburied sewer (generally a sanitary sewer), supported on piers, pedestals or bents to provide a suitable grade line.

Aggressive: A property of the sewage conveyed that results in accelerated corrosion of the conveying sewer conduit.

Building Sewer: The conduit that connects building wastewater sources to the public or street sewer, including lines serving homes, public buildings, commercial establishments and industry structures. Referred to also as house sewer, building connection, service connection or lateral connection.

Cleaning: Techniques used to clean sewer lines either hydraulically or mechanically. *Hydraulic cleaning* involves using water, such as water pumped at a high velocity spray and water flowing by gravity or head pressure. Devices include high-velocity jet cleaners, cleaning balls (or pigs) and hinged-disc cleaners. *Mechanical cleaning* includes methods utilizing rodding machines, bucket machines, kites, winch-pulled brushes and wheelbarrows with spades.

Collector Sewer: A sewer located in the public way that collects wastewater discharges through building sewers, and conducts such flows to larger interceptor sewers, lift stations and treatment works.

Combined Sewer: A sewer that is designed to serve as both a sanitary sewer and a storm sewer.

Conduit: A pipe or other opening, buried or above ground, for conveying hydraulic traffic, pipelines, cables or other utilities.

Core Area: That essential part of a sewer network containing critical sewers and other sewers where hydraulic problems are likely to be most severe, and that require detailed definition within a flow simulation model.

Corrosion Rate: The rate (usually an average) at which corrosion of a component of the wastewater network progresses; expressed as though it were linear in units of mdd (millimeters per square decimeter day) for weight change, or mpy (millimeters per year) for thickness changes.

Corrosion Resistance: Ability of a material to withstand corrosion within the wastewater network.

Creep: The dimensional change, with time, of a sewer renovation material (lining) under continuously applied stress after the initial elastic deformation.

Critical Sewers: The major sewers in a wastewater network that would exhibit the most significant consequences in the event of structural collapse.

Critical Soils: Appraisal of the nature of soils surrounding sewers. Soils of *High-Criticality* are composed of silts and sands. Those of *Medium-Criticality* consist of low plasticity clays and gravel. Soils of *Low-Criticality* consist of medium to high plasticity clays and all clays where the sewer was constructed in tunnel.

Deflection: Reduction in vertical diameter and/or distortion in shape of a conduit as a result of self-weight or external forces.

Degradation: Breakdown in chemical resilience of a plastic product.

Effluent: Outflow or discharge from a sewer or wastewater treatment product.

Elastic Modulus: Characteristic of the stress build-up associated with a given strain in a conduit or lining (see also **Flexural Modulus**). Typically a feature of the strength characteristics of lining materials in sewers.

Elongation: The increase in length of a material stressed in tension.

Embrittlement: Loss of ductility of a material, resulting from a chemical or physical change.

Environmental Stress Crackling: The visible manifestation of a material's susceptibility to crack under the influence of specific chemical or mechanical stresses.

Epoxy: Resin formed by the reaction of bisphenol and epichlorohydrin.

Erosion: Deterioration of the surface of a component of the wastewater system resulting from the action of harder material suspended in sewage on the wastewater component.

Exfiltration: The leakage or egress of sewage from the wastewater system into the surrounding area, usually the ground, through leaks in pipes, joints, manholes, or other sewer system structures and components; the reverse of infiltration.

External Structural Condition: Appraisal of a length of sewer between manholes in to identified external forces (e.g., from traffic load if less than 4 feet below highway; ground water pressure if below the water table, etc.) and nature of ground (e.g., soil criticality, chemical inertness, etc.).

Flexural Modulus: The slope of the elastic strain curve defined by flexural load versus resultant strain. A high flexural modulus indicates a stiffer material.

Flexural Strength: The strength of a material in bending expressed as the tensile stress of the outermost fibers at the instant of failure.

Flow Attenuation: The process of reducing the peak flow rate in a sewer system by redistributing the same volume of flow over a longer period.

General Corrosion: Uniform corrosion, usually a phenomenon observed above the flow line in the sewer.

Ground Water Table (Level): Upper surface of the zone of saturation in permeable strata. Of special relevance to sewer survey or inspection if immediately above or below the sewer. The sewer is more susceptible to ground water infiltration if above the sewer. (See also **Ground Water Infiltration**).

Grout: (1) A fluid mixture typically consisting of cement, water and sand that can be poured or pumped easily. (2) Chemical mixtures that have the capability of stopping water infiltration through small holes and cracks in sewers and manholes.

Grouting: (1) The joining together of loose particles of soil in such manner that the soil so joined becomes a solid mass impervious to water. (2) The process of introducing (typically by pumping) a cement and water grout into the annular space between a host pipe and a slipline pipe.

Header: All reference data at the head of the coding sheet, other than sewer condition data, attaching to the sewer being inspected.

Hydraulic Gradient: An imaginary line through the points to which water would arise in a series of vertical tubes connected to the sewer.

Hydrogen Sulfide Corrosion: Hydrogen sulfide corrosion is the attack of cementitious materials caused by the microbiological conversion of sulfates within sewage to gaseous sulfides and then to sulfuric acid. The corrosion causes a reduction in the sewer wall thickness and a loss of structural integrity.

Infiltration: See **Ground Water Infiltration.**

Infiltration/Inflow (I/I): Pertaining to the study and understanding of the undesirable ingress of infiltration and inflow into the wastewater system.

Inflow: The rain-induced water entering the sewerage or wastewater system from areas not intended to drain to the sewerage or wastewater system. Inflow is thus distinguished from infiltration. (See also **Ground Water Infiltration**).

Interceptor Sewer: A sewer that receives flow from collector sewers and conveys the wastewater to treatment facilities.

Internal Condition Grade (ICG): The relative state of the internal service or structural performance of the sewer in relation to specified criteria. In broad structural terms, it is a measure of the sewer's probability to collapse.

Internal Sewer Service Condition: The ability of a length of sewer between manholes to perform its intended function of conveying sewage, determined by the degree of non-structural defects within the sewer.

Man Entry Sewers: Those sewers considered to be large enough for safe manual (physical) inspection, survey and work activities (e.g., manual renovation and repair). Generally considered to be greater than 1,000 millimeters (around 40 inches) in size. Safety considerations are important before contemplating and undertaking such a survey.

Manholes Length, Section or Segment: The length of sewer between two adjacent manholes.

Non-Man Entry Sewers: Those sewers considered to be too small for manual inspection, survey and work activities (e.g., renovation and repair). Generally considered to be less than 1,000 millimeters (around 40 inches) in size. Normally, these sewers are inspected and surveyed using CCTV, and repairs are carried out robotically.

Non-uniform Corrosion: Corrosion that attacks small, localized areas of the sewer, usually resulting in material loss. Characteristic of poorly made non-uniform concrete.

Overflow: (a) The excess water that flows over the ordinary limits of the sewer, manhole, or containment structure. (v) An outlet, pipe, or receptacle for excess water.

Oxidation: Loss of electrons, as when metal goes from the metallic state to the corroded state.

PH: A measure of the acidity or alkalinity of sewage, expressed as the logarithm, base 10, of the inverse of the hydrogen ion concentration (the weight of the hydrogen ions multiplied by the activity coefficient, which is close to unity in most fresh waters and in other waters of relatively low ionic strength). Most aqueous solutions have pH values in the range 0-14, with pure water (which is neutral) having a pH value of 7. Values above or below 7 indicate alkalinity or acidity, respectively.

Pipeline: An alternative definition of a length of sewer that exists as a single branch within the wastewater network. It consists of many pipes and extends from manhole to manhole.

Pipe Sealing: Sealing of existing circumferential pipe crack or pipe joint using grouting materials under air pressure.

Pipe Repair: Repair of fracture, break or longitudinal crack or fracture in a pipeline by manual (in Man entry sewers) or robotic (in Non-man entry sewers) structural repair techniques.

Pitting: Localized corrosion resulting in deeper penetration of the concrete surface in only a few spots.

Pitting Factor: Depth of the deepest pit divided by the average penetration calculated from weight loss.

Sanitary Sewer: A sewer intended to carry only sanitary or sanitary and industrial wastewater from residences, commercial buildings, industrial parks, and institutions.

Scaling: Thin layer of deposit or remnant of sewer material observed during the course of inspection/ survey.

Serviceability of the Sewer or Sewer System: Continued service life with high degree of confidence that failure will not occur during its long-term service.

Sewer: An underground conduit designed to carry wastewater. A sewer can take the form of a pipe or tunnel and can be of many shapes (e.g., circular, ovoid, u-shaped, rectangular, oval, etc.) and materials (e.g., concrete, asbestos cement, truss, clayware, brick, steel, cast iron, etc.). Sewers convey either storm water or wastewater.

Sewer Infiltration: See **Infiltration.**

Sewer Inflow: See **Inflow.**

Sewer Inspection: Viewing the sewer primarily with the aid of sewer CCTV equipment, and or manually, to assess overall condition. No data logging is required. Inspection is normally carried out as an adjunct to other activities in the sewer such as preparatory cleaning or pre/post renovation measures. (See also **Sewer Survey**).

Sewer Structural Condition: Assessment of the structural integrity of the sewer.

Sewer Service Condition: Assessment of the service condition of the sewer, reflecting the sewer conduit's capacity, potential for blockage, and water tightness.

Sewer Springings: The imaginary points on the wall of the sewer at the ends of the horizontal diameter. Normally considered to be the position where the arch, or top half, of the sewer commences.

Sewer Survey: Viewing and appraising the sewer with the aid of:

Internally:

- *Sewer CCTV equipment*, and/or manually to assess internal structural and/or service condition of the sewer (as well as assess the structural and/or service condition and location of laterals). Data logging is required and the depth of flow is not more than 25 percent of the vertical dimension of the sewer;

- *Sewer profiling equipment*, to establish the dimensional configuration of the sewer (including percentage deformation). Flow is normally bypassed;

- *Sonar equipment*, when the sewer is flooded or partially flooded to assess internal structural and/or service condition of the sewer (as well as assess the structural and/or service condition and location of laterals). Data logging is required, though not with the same resolution as with CCTV;

- *A combination of sonar and CCTV equipment,* when the depth of flow is between 25 percent and 75 percent in sewers larger than 18 inches; and/or

- *Thermographic sensor-equipment*, to determine the position of laterals in lined sewers.

Externally:

- Ground probing radar antennae, to assess external conditions (e.g., voids) immediately relating to the sewer;

- Seismic resonance testing equipment, to assess stratification and nature of the ground between the ground surface and the sewer; and/or

- Such other equipment that provides insights into the nature of the sewer and its surrounding conditions.

A sewer survey normally forms the basis of an engineering interpretation of the internal condition of the sewer (see also **Sewer Inspection**).

Springing: See also **Sewer Springing**.

Standard Dimension Ratio (SDR): Ratio of the pipe diameter to wall thickness.

Surcharge: Occurs and is witnessed when the sewer flow exceeds the hydraulic capacity of the sewer line.

Uniform Corrosion: Corrosion that results in an equal amount of material loss over an entire sewer surface

ATTACHMENT B

INTERNAL SEWER CONDITION ASSESSMENT SAMPLE REPORTS

(For use with City of Atlanta Database)

[This page intentionally left blank]

< SURVEY REPORT > < Page Number : 167 >

Date : 02 05 2000 Time : 10:28

Contractor	Contract No	Job No	Drainage Area	Div	Dist	Pipe L. Ref
ASI/DG	ASG/0001	0	0	0	000	23250201501X

Location	Place Name
BERKELE STREET	MCDANIEL BASIN

Start Manhole No. : 23250201001 Depth : 08.0 Total Length : 365.0
Finish Manhole No. : 23250201501 Depth : 09.0 Suyed Length : 280.7

Use	Direction	Size	Shape	Material	Lining	Yr Laid	Pipe L
COMBINED	UPSTREAM	8in	CIRC.	V. CLAY		Z	3.00

CD-ROM No	V. Model	Comments
00016		-

Purpose	Weather	Location	Further Information
	DRY		-

< DETAIL > < Page Number : 167 >

Digit Ph.	Dist	CD	Code	Other Details
0136	0.0		ST	Start of Survey [0065]
0280	0.0		MH	Manhole 23250201001
0560	0.0		WL	Water Level is now 05%
0163	30.2		JN	Junction. 6in at 03o/c FW
0180	41.6		JDM	Joint Displaced Medium
0186	43.3		JN	Junction. 6in at 09o/c SW
0200	54.6		OJM	Open Joint Medium
0203	56.3		JN	Junction. 6in at 09o/c SW
0226	79.0		JN	Junction. 6in at 03o/c FW?
0236	83.2		JN	Junction. 6in at 09o/c FW
0260	106.5		JN	Junction. 6in at 02o/c FW?
0270	108.5		JN	Junction. 6in at 09o/c FW
0286	120.9		CNI	Conn. Intruding by 1in. 6in Dia at 12o/c FW
0303	135.4		CL	Longitudinal Crack at 12o/c
0310	136.0		CNI	Conn. Intruding by 1in. 6in Dia at 12o/c FW?
0326	147.2		JN	Junction. 6in at 03o/c FW
0333	149.8		JN	Junction. 6in at 09o/c SW
0346	157.5		JN	Junction. 6in at 03o/c SW
0366	175.9		JN	Junction. 6in at 10o/c SW
0376	181.0		JN	Junction. 6in at 02o/c FW?
0386	184.9		JN	Junction. 6in at 10o/c SW
0780	184.9	S1	DES	Debris Silt. 05% loss
0416	209.3		JN	Junction. 6in at 10o/c FW?
0840	209.3	F1	DES	Debris Silt. 05% loss
0433	218.9		JN	Junction. 6in at 02o/c SW
0453	234.2		JN	Junction. 6in at 10o/c SW
0470	244.8		FCJ	Circumferential Fracture at Joint at 03 to 05o/c
0483	254.7		JN	Junction. 6in at 02o/c FW?
0970	254.7	S2	DES	Debris Silt. 05% loss
1940	254.7	S3	RF	Fine Roots
0490	257.5		JN	Junction. 6in at 09o/c SW
0513	279.5	C2	DES	Debris Silt. 50% loss
0520	280.6		JN	Junction. 6in at 02o/c SW

DETAIL CONTINUED ON NEXT PAGE For Page Number : 167

```
< CONTINUATION PAGE >------< Page Number :    167 >
Location                          Place Name
BERKELE STREET                    MCDANIEL BASIN

Start  Manhole No. : 23250201001  Depth : 08.0   Total Length : 365.0
Finish Manhole No. : 23250201501  Depth : 09.0   Suyed Length : 280.7

< DETAIL CONTINUED >------< Page Number :    167 >
Digit Ph.  Dist CD Code Other Details

0523      280.7 F2 DES  Debris Silt. 50% loss
1050      280.7 F3 RF   Fine Roots
0523      280.7    SA   Survey Abandoned  DUE TO SURVEY OVERLAP

< SUMMARY >------< Page Number :    167 >
St Mh No.  : 23250201001  Fh Mh No. : 23250201501  Suyed Length : 280.7

SOME MAJOR defects in this length :   Deformations :  NO

          Mult/Long/Circ Heavy/Medium  Gusher/Runner Mass
Breaks/Holes  Fractures   Encrustation  Infiltration  Roots Obstructions
  NO                        NO            NO          NO       NO
                CIRC
     Faulty Junctions/Connections : YES
< END OF SUMMARY >
```

SURVEY REPORT — Page Number : 170

Date : 02 05 2000 Time : 17:20

Contractor	Contract No	Job No	Drainage Area	Div	Dist	Pipe L. Ref
ASI/DG	ASG/0001	0	0	0	000	23250200401X

Location	Place Name
MCDANIEL STREET	MCDANIEL BASIN

Start Manhole No. : 23250201901 Depth : 09.6 Total Length : 085.8
Finish Manhole No. : 23250200401 Depth : 08.0 Suyed Length : 085.8

Use	Direction	Size	Shape	Material	Lining	Yr Laid	Pipe L
COMBINED	UPSTREAM	12in	CIRC.	V. CLAY		Z	3.00

CD-ROM No	V. Model	Comments
00016		-

Purpose	Weather	Location	Further Information
	.DRY		-

DETAIL — Page Number : 170

Digit Ph.	Dist	CD	Code	Other Details
0683	0.0		ST	Start of Survey [0341]
1370	0.0		MH	Manhole 23250201901
1940	0.0		WL	Water Level is now 05%
0683	0.0	S1	DEG	Debris Grease at 07o/c to 05o/c. 05% loss
0693	13.9		JDM	Joint Displaced Medium
0700	18.3		OB	Obstruction. 05% loss STONE
0710	26.3	S2	DES	Debris Silt. 05% loss
0720	35.4		CXI	Conn Defect/Intr. by 3in. 6in Dia. At 10o/c SW
1440	35.4		JN	Junction. 6in at 02o/c CAPPED OFF
0736	40.5		JN	Junction. 6in at 02o/c CAPPED OFF
0750	46.6	C2	DES	Debris Silt. 15% loss
0766	60.9		JN	Junction. 6in at 10o/c CAPPED OFF
0783	73.7		JX	Junction. Defective. 6in Dia at 02o/c SW
1570	73.7		B	Break. From 11o/c to 01o/c
0796	81.1		JN	Junction. 6in at 10o/c
0800	85.8	F1	DEG	Debris Grease at 07o/c to 05o/c. 05% loss
1600	85.8	F2	DES	Debris Silt. 15% loss
2400	85.8		MH	Manhole 23250200401
0800	85.8		FH	Finish of Survey.

SUMMARY — Page Number : 170

St Mh No. : 23250201901 Fh Mh No. : 23250200401 Suyed Length : 085.8

SOME MAJOR defects in this length : Deformations : NO

Breaks/Holes	Mult/Long/Circ Fractures	Heavy/Medium Encrustation	Gusher/Runner Infiltration	Mass Roots	Obstructions
YES	NO	NO	NO	NO	YES

Faulty Junctions/Connections : YES

END OF SUMMARY

SURVEY REPORT — Page Number : 184

Date : 02 07 2000 Time : 14:52

Contractor	Contract No	Job No	Drainage Area	Div	Dist	Pipe L. Ref
ASI/DG	ASG/0001	0	0	0	000	23350305601X

Location	Place Name
GAULT STREET	BOULEVARD BASIN

Start Manhole No. : 23350305601 Depth : 22.0 Total Length : 501.2
Finish Manhole No. : 23350315501 Depth : 00.0 Suyed Length : 501.2

Use	Direction	Size	Shape	Material	Lining	Yr Laid	Pipe L
COMBINED	D/STREAM	12in	CIRC.	V. CLAY		Z	3.00

CD-ROM No	V. Model	Comments
00017		-

Purpose	Weather	Location	Further Information
	DRY		-

DETAIL — Page Number : 184

Digit Ph.	Dist	CD	Code	Other Details
0786	0.0		ST	Start of Survey [0392]
1580	0.0		MH	Manhole 23350305601
2360	0.0		WL	Water Level is now 05%
0790	6.0	S1	EMJ	Encrust Med at Jnt. 15% loss at 07o/c to 05o/c CLOCKS VARY
0800	12.9		EHJ	Encrust Heavy at Jnt. 25% loss at 12o/c to 05o/c
0810	15.3		IDJ	Infiltration Dripping at Joint at 11o/c to 12o/c
0816	18.6		EHJ	Encrust Heavy at Jnt. 25% loss at 01o/c to 05o/c
0823	24.7		CL	Longitudinal Crack at 12o/c
0830	31.5		FL	Longitudinal Fracture at 12o/c
0840	43.2		EHJ	Encrust Heavy at Jnt. 30% loss at 07o/c to 05o/c
0846	46.3		EHJ	Encrust Heavy at Jnt. 25% loss at 07o/c to 05o/c
1700	46.3	S2	IDJ	Infiltration Dripping at Joint at 12o/c
2600	46.3		RFJ	Fine Roots at Joint
0856	50.9		EHJ	Encrust Heavy at Jnt. 50% loss at 09o/c to 03o/c OBSCURING VISION
0920	87.5	F2	IDJ	Infiltration Dripping at Joint at 12o/c
0956	147.1		IDJ	Infiltration Dripping at Joint at 12o/c
0966	161.0		EHJ	Encrust Heavy at Jnt. 25% loss at 09o/c to 03o/c
1940	161.0		IDJ	Infiltration Dripping at Joint at 11o/c
3080	161.0		RFJ	Fine Roots at Joint
0973	166.5		EHJ	Encrust Heavy at Jnt. 25% loss at 08o/c to 12o/c
0983	171.1		IDJ	Infiltration Dripping at Joint at 11o/c
0996	194.7		IDJ	Infiltration Dripping at Joint at 11o/c
1003	202.4		IDJ	Infiltration Dripping at Joint at 01o/c
1016	213.7		BJ	Break at Joint. From 06o/c to 08o/c
1026	217.6		IDJ	Infiltration Dripping at Joint at 11o/c to 12o/c
1033	225.2		IDJ	Infiltration Dripping at Joint at 01o/c
1050	252.9	F1	EMJ	Encrust Med at Jnt. 15% loss at 07o/c to 05o/c CLOCKS VARY
1300	252.9	S3	ELJ	Encrust Light at Joint at 07o/c to 05o/c CLOCKS VARY
1066	286.4		IDJ	Infiltration Dripping at Joint at 12o/c
1073	296.2		RMJ	Mass Roots at Joint. 30% loss
1350	296.2		IDJ	Infiltration Dripping at Joint at 02o/c

DETAIL CONTINUED ON NEXT PAGE For Page Number : 184

< CONTINUATION PAGE > < Page Number : 184 >

Location	Place Name
GAULT STREET	BOULEVARD BASIN

Start Manhole No. : 23350305601 Depth : 22.0 Total Length : 501.2
Finish Manhole No. : 23350315501 Depth : 00.0 Suyed Length : 501.2

< DETAIL CONTINUED > < Page Number : 184 >

Digit Ph.	Dist	CD	Code	Other Details
1086	304.2		RMJ	Mass Roots at Joint. 10% loss
1113	349.6		RMJ	Mass Roots at Joint. 65% loss
1130	367.7		RMJ	Mass Roots at Joint. 05% loss
1133	370.7		RMJ	Mass Roots at Joint. 60% loss
1146	375.8		RMJ	Mass Roots at Joint. 05% loss
1150	377.8	S4	RFJ	Fine Roots at Joint
1186	441.6		BJ	Break at Joint. From 09o/c to 12o/c
1193	442.7		B	Break. From 11o/c to 01o/c
1200	444.8		B	Break. From 11o/c to 01o/c
				REPAIRED
1206	446.3		CCJ	Circumferential Crack at Joint at 07o/c to 09o/c
1213	448.5		B	Break. From 10o/c to 01o/c
				REPAIRED
1220	451.8		B	Break. From 11o/c to 01o/c
				REPAIRED
1230	454.7		B	Break. From 10o/c to 12o/c
				REPAIRED
1240	457.2		B	Break. From 10o/c to 12o/c
				REPAIRED
1250	460.3		B	Break. From 09o/c to 01o/c
				REPAIRED
1256	462.1		B	Break. From 10o/c to 01o/c
				REPAIRED
1266	471.9		B	Break. From 11o/c to 02o/c
				REPAIRED
1273	478.5		RMJ	Mass Roots at Joint. 25% loss
1750	478.5		RTJ	Tap Roots at Joint
1346	485.1		RMJ	Mass Roots at Joint. 25% loss
1360	492.7	S5	DES	Debris Silt. 10% loss
1370	501.2	F3	ELJ	Encrust Light at Joint at 07o/c to 05o/c
				CLOCKS VARY
1940	501.2	F4	RFJ	Fine Roots at Joint
3080	501.2	F5	DES	Debris Silt. 10% loss
3760	501.2		MH	Manhole 23350315501
1370	501.2		FH	Finish of Survey.

< SUMMARY > < Page Number : 184 >

St Mh No. : 23350305601 Fh Mh No. : 23350315501 Suyed Length : 501.2

SOME MAJOR defects in this length : Deformations : NO

Breaks/Holes	Mult/Long/Circ Fractures	Heavy/Medium Encrustation	Gusher/Runner Infiltration	Mass Roots	Obstructions
YES	LONG	HEAVY MEDIUM	NO	MASS	NO

Faulty Junctions/Connections : NO

< END OF SUMMARY >

[This page intentionally left blank]

ATTACHMENT C

DEFECT, MATERIAL, SHAPE, AND LINING CODES

[This page intentionally left blank]

DEFECT CODES SORTED ALPHABETICALLY

CONT. DEFECT	CODE	DEFINITION	DIAMETER	CLOCK AT	CLOCK TO	PERCENT / INTRUSION	REMARKS
Optional	**B**	Broken pipe	N/A	Req'd	Optional	N/A	Optional
N/A	**BR**	Branch major	Req'd	Optional	N/A	N/A	Optional
Optional	**CC**	Crack circumferential	N/A	Req'd	Req'd	N/A	Optional
Optional	**CL**	Crack longitudinal	N/A	Req'd	N/A	N/A	Optional
Optional	**CM**	Cracks multiple	N/A	Req'd	Req'd	N/A	Optional
N/A	**CN**	Connection	Req'd	Req'd	N/A	N/A	Enter Connection Material
N/A	**CNA**	Connection, abandoned	Req'd	Req'd	N/A	N/A	Optional
N/A	**CNI**	Connection, intruding	Req'd	Req'd	N/A	Intr - inches	Enter Connection Material
N/A	**CXA**	Connection, defective abandoned	Req'd	Req'd	N/A	Intr - inches	Enter Connection Material
Optional	**CU**	Camera underwater	N/A	N/A	N/A	%	Optional
N/A	**CX**	Connection defective	Req'd	Req'd	N/A	N/A	Enter Connection Material
N/A	**CXI**	Connection defective, intruding	Req'd	Req'd	N/A	Intr - inches	Enter Connection Material
Optional	**D**	Deformed sewer	N/A	N/A	N/A	%	Optional
Optional	**DB**	Displaced bricks	N/A	Req'd	Optional	N/A	Optional
N/A	**DC**	Dimension of sewer changes	Req'd	N/A	N/A	N/A	Optional
Optional	**DE(J)**	Debris (non-silt/grease)	N/A	N/A	N/A	%	Optional
Optional	**DEG(J)**	Debris grease	N/A	Req'd	Req'd	%	Optional
Optional	**DES(J)**	Debris silt	N/A	N/A	N/A	%	Optional
Optional	**DH**	Deformed sewer, horizontal (brick sewers only)	N/A	N/A	N/A	%	Optional
Optional	**DI**	Dropped invert (brick sewer only)	N/A	N/A	N/A	N/A	Gap ... inches
Optional	**DV**	Deformed sewer, vertical	N/A	N/A	N/A	%	Optional
Optional	**EH(J)**	Encrustation heavy	N/A	Req'd	Req'd	%	Optional
Optional	**EL(J)**	Encrustation light	N/A	Req'd	Req'd	%	Optional
Optional	**EM(J)**	Encrustation medium	N/A	Req'd	Req'd	%	Optional
Optional	**ESH**	Scale heavy	N/A	Req'd	Req'd	%	Optional
Optional	**ESL**	Scale light	N/A	Req'd	Req'd	%	Optional
Optional	**ESM**	Scale medium	N/A	Req'd	Req'd	%	Optional

Optional	**FC**	Fracture circumferential	N/A	Req'd	Req'd	N/A	Optional
N/A	**FH**	Finish Survey	N/A	N/A	N/A	N/A	Enter Finish MH Label
Optional	**FL**	Fracture longitudinal	N/A	Req'd	N/A	N/A	Optional
Optional	**FM**	Fractures multiple	N/A	Req'd	Req'd	N/A	Optional
N/A	**GO**	General observation at this point	N/A	N/A	N/A	N/A	Enter reason for general observation
N/A	**GOA**	General observation Abandonment of a Service Line Survey/Inspection	N/A	N/A	N/A	N/A	Enter reason for general abandonment and "D="
N/A	**GP**	General photograph number	N/A	N/A	N/A	N/A	Enter reason for general photograph
N/A	**H**	Hole in sewer	N/A	Req'd	Req'd	N/A	Indicate size of hole
Optional	**ID(J)**	Infiltration dripper	N/A	Req'd	Optional	N/A	Optional
Optional	**IG(J)**	Infiltration gusher	N/A	Req'd	Optional	N/A	Optional
Optional	**IR(J)**	Infiltration runner	N/A	Req'd	Optional	N/A	Optional
Optional	**IS(J)**	Infiltration seeper	N/A	Req'd	Optional	N/A	Optional
Optional	**JDL**	Joint displaced large	N/A	N/A	N/A	N/A	Optional
Optional	**JDM**	Joint displaced medium	N/A	N/A	N/A	N/A	Optional
N/A	**JN**	Junction	Req'd	Req'd	N/A	N/A	Enter Junction Material
N/A	**JNA**	Junction, abandoned	Req'd	Req'd	N/A	N/A	Optional
N/A	**JX**	Junction defective	Req'd	Req'd	N/A	N/A	Enter Junction Material and Defect Type
N/A	**JXA**	Junction defective abandoned	Req'd	Req'd	N/A	N/A	Enter Junction Material and Defect Type
N/A	**LC**	Lining of sewer changes/starts/finishes	N/A	N/A	N/A	N/A	Enter new lining or material code
N/A	**LD**	Line of sewer deviates down	N/A	N/A	N/A	N/A	Optional
Optional	**LL**	Line of sewer deviates left	N/A	N/A	N/A	N/A	Optional
Optional	**LN**	Lining defect	N/A	Req'd	Req'd	N/A	Optional
Optional	**LR**	Line of sewer deviates right	N/A	N/A	N/A	N/A	Optional
N/A	**LU**	Line of sewer deviates up	N/A	N/A	N/A	N/A	Optional
Optional	**MB**	Missing bricks	N/A	Req'd	Req'd	N/A	Indicate size of hole
N/A	**MC**	Material of sewer changes at this point	N/A	N/A	N/A	N/A	Enter new material
N/A	**MH**	Manhole/node	N/A	N/A	N/A	N/A	Enter the Start or Finish MH Label
Optional	**MM**	Mortar missing	N/A	Req'd	Req'd	N/A	Optional

		medium					
Optional	**MS**	Mortar missing surface	N/A	Req'd	Req'd	N/A	Optional
Optional	**MT**	Mortar missing total	N/A	Req'd	Req'd	N/A	Optional
Optional	**OB(J)**	Obstruction	N/A	N/A	N/A	%	Enter the type of obstruction
Optional	**OJL**	Open joint large	N/A	N/A	N/A	N/A	Optional
Optional	**OJM**	Open joint medium	N/A	N/A	N/A	N/A	Optional
N/A	**PC**	Pipe Joint Length changes	N/A	N/A	N/A	N/A	Enter new pipe joint length, in feet
Optional	**RF(J)**	Roots fine (at joint)	N/A	Req'd	Req'd	N/A	Optional
Optional	**RM(J)**	Roots mass (at joint)	N/A	Req'd	Req'd	%	Optional
Optional	**RT(J)**	Roots tap (at joint)	N/A	Req'd	Req'd	N/A	Optional
N/A	**SA**	Survey abandoned	N/A	N/A	N/A	N/A	Enter Reason for abandoned survey
N/A	**SC**	Shape of sewer changes at this point	N/A	N/A	N/A	N/A	Enter code for new shape / other pertinent comments
Optional	**SSL**	Surface damage, spalling large	N/A	Req'd	Req'd	N/A	Optional
Optional	**SSM**	Surface damage, spalling medium	N/A	Req'd	Req'd	N/A	Optional
Optional	**SSS**	Surface damage, spalling slight	N/A	Req'd	Req'd	N/A	Optional
N/A	**ST**	Start of survey	N/A	N/A	N/A	N/A	Optional
Optional	**SWL**	Surface damage, wear large	N/A	Req'd	Req'd	N/A	Optional
Optional	**SWM**	Surface damage, wear medium	N/A	Req'd	Req'd	N/A	Optional
Optional	**SWS**	Surface damage, wear slight at	N/A	Req'd	Req'd	N/A	Optional
Optional	**V**	Vermin	N/A	N/A	N/A	N/A	Optional
Optional	**WL**	Water level	N/A	N/A	N/A	%	Optional
Optional	**X**	Sewer collapsed	N/A	N/A	N/A	%	Optional

DEFECT CODES SORTED BY TYPE

Pipe Material Codes:

AK	Alkathene
AC	Asbestos Cement
BR	Brick
CI	Cast Iron
SI	Spun Grey Iron
CMP	Corrugated Metal Pipe
CSB	Concrete Segment Bolted
CSU	Concrete Segment Unbolted
CO	Concrete
CC	Box Culvert
DI	Ductile Iron
GRC	Glass Reinforced Concrete
GRP	Fiberglass
PSC	Plastic / Steel Composition
PE	Polyethylene
PLP	PVC Fold & Form
PVC	PVC
RCP	Reinforced Concrete
RPM	Reinforced Plastic Matrix (Truss)
ST	Steel
VC	Vitrified Clay
PP	Polypropylene
WOD	Wood
PF	Pitch Fiber (Orangeburg)
MA	Masonry
XXX	Other (Comment)
ZZZ	Not Known

Pipe Shape Codes:

A	Arched,
B	Barrel (Beer Barrel)
C	Circular
E	Egg Shape
H	Horseshoe
O	Oval
R	Rectangular
S	Square
T	Trapezoidal
U	U Shape w/ Flat Top
X	Other (Comments)

Pipe Liner Codes:

BL	Bitumin,
CPP	Cure In Place
CL	Cement,
IS	Soft Inversion,
PL	Plastic,
RL	Resin Liner,
XXX	Other,
ZZZ	Not Known

Pipe Use Codes:

C	Combined
F	Foul (Sanitary)
S	Surface Water
T	Trade Effluent
W	Watercourse (Culvert)
X	Other (Comment)
Z	Not Known

Purpose Codes:

A	Specific problems on sewer system related to structural or service condition
B	Specific problems on sewer system related to infiltration
C	Assessment of complete remedial or renovation works
D	Pre-adoption - normally new sewers for adoption
E	Pre-acceptance - new sewers (direct contract) constructed by sewerage undertakers
F	Sample survey to determine asset condition
G	Associated with future capital scheme including Drainage Area Planning
H	Resurvey for any reason
X	Other (state in Comments)
Z	Not Known

Location:

A	Main Road Urban
B	Main Road Rural
C	Lightly Traveled Road
D	Foot Path / Road Shoulder
E	Field
F	Garden
G	Woodlands
X	Difficult Access

Weather Codes:

1	Dry
2	Heavy Rain

3	Light Rain
4	Showers
5	Snow

[This page is intentionally blank]

ATTACHMENT D

GENERAL INSPECTION LOGGING REQUIREMENTS

[This page intentionally left blank]

General reporting notes – **Header Information**
(to be read in conjunction with other related documentation, i.e. Clients Instructions or the Manual of Sewer Condition Classification):

- The Inspection company and the Inspectors name must be entered on the Header.
- The Date and accurate time of the inspection must also be recorded.
- Pipe sizes and shapes must also be recorded.
- **Recheck the accuracy of the Manhole Numbers and Road Names (for Road Names, i.e. 4711 Peachtree Street NE) as these are the "keys" to the whole inspection.**
- The Depth of the Start and Finish Manhole must be entered, but as a minimum, the Start Manhole depth is essential.
- A Total Length from center to center of manholes (Total Length Field) must be entered, either derived from the footage to the finish manhole (when the inspection successfully reaches the finish manhole) or estimated either from the Plan or by striding the length. It is fully understood that, in the case of an SA, the Total Footage is an estimate, **but it must not be the same as the Inspected length if SA**.
  If the Finish manhole cannot be found then enter a sensible footage (nominally 300 feet as an example) and NOT the footage of the abandonment. If the Total Length is estimated then just enter the text "Tot Length?" in Comments.
- If a Buried or Unmappped manhole is encountered then the Inspection report MUST finish with the MH / FH codes, and a new Inspection must be started. In the case of an unnumbered manhole being found, the numbering of the Manhole MUST be as advised by the client prior to the start of the Inspection/Contract.
  Do not just make up a number. Update the map by marking the position of the Unmapped Manhole in red and writing its number in red.
- If the inspection is abandoned from one direction and inspected from the other direction then the inspection from the first direction must by finished using SA (**plus a reason for the Inspection being Abandoned, SA)** and a new Header must be started for the "Reverse Inspection". Note the reverse inspection by entering a "Y" in the proper field on line 1.
- If the inspection is not going to be carried out from the other Manhole, in the case of an SA, then a Header sheet MUST still be completed as if the inspection was to take place, with the reason for failing to carry out the inspection. **See the separate "No Access Instructions" appended to these guidelines.**
- Determine, prior to starting the contract, from Specification Section 02752, what text (data) must be displayed on the monitor (hence recorded). At the start of each inspection as much information as possibly needs to be recorded.
- **If using VHS tape, the video recorder MUST be set to SP and NOT EP or LP for the best quality** to be achieved especially if the Video is going to be encoded onto CD-ROM

General reporting notes – Detail Information

- The first three lines of each set of inspection details **must** have the codes ST, MH, and WL. **The Manhole Number must be entered in the Remarks column against the MH code** (this is essential as a number of Data Interrogation packages stores the Header and Detail records separately which are "connected" by an Index. To ensure data integrity, a QC check can be run against the Detail information to confirm that the correct Details are against the relevant Header).

  i.e.:

V Digit	Dist	Code	Remarks
02305	**0.0**	**ST**	
	0.0	**MH**	**SJ34255521**
	0.0	**WL**	**10**

- Each line of Detail must have the video digit (V Digit) entered against each code, presented in the following way:
  - The video digits must conform to the National elapsed time based standards (time into the tape) for Video Tape recorders:
    - Always have digits (hmmss).
    - Always right justified and zero filled.
    - The following elapsed time format MUST be adhered to, i.e.:

      02305 is:

      0 = Number of hours (Zero hours).
      23 = Number of minutes (23 minutes).
      0 = Units of 10 seconds each (0 seconds)
      5 **=** Units of seconds (5 seconds).

    - Other examples:

      00324 = 3 minutes and 24 seconds into the tape.
      15039 = 1 hour, 50 minutes and 39 seconds into the tape.
      24516 = 2 hours, 45minutes and 16 seconds into the tape.

  This method locates the position of the defect/feature into the tape to within a few seconds, which is more than adequate.

- **The final detail line for each inspection MUST end with a Termination code, either SA (Survey Abandoned) or FH (Survey Finished).**

  i.e.

24511	**76.0F1FL**	**12**	
24511	**76.0**	**RMJ**	**30**
24511	**76.0**	**SA**	**DUE TO ROOTS MASS (or DUE TO RMJ)**

  ---------- or ----------

14956	**97.3**	**D**	**10**
15032	**102.9**	**MH**	**SJ35513464**
15032	**102.9**	**FH**	

Each* Inspection *Report MUST only contain one Inspection hence, in the case of a Survey Abandonment or a buried or unmappped manhole being encountered, a new Header and Detail must be completed.

The above are essential for the Validation of the data to take place and to tie the data in with Mapping systems.

General reporting notes – Detail Information (Cont'd)

When a defect or feature is encountered, the camera must be stopped just prior to the defect/feature so that it can be clearly seen.

- The defect/feature must be recorded for a sufficient time to enable the engineer to assess the observation without recourse to using the "pause" facility.
- A video digit must be entered against the defect/feature in the format of time elapsed into video tape. The format is :h:mm:ss (explained above).
- If the defect spans for more than 3 feet or is repetitive over a number of joints (i.e. ELJ, Encrustation Light at Joint) then a Start Flag (S1, S2 etc, sequentially up to S9 then SA, SB --- SZ! can be used) can be entered against the code at the start footage. When the defect finishes the appropriate Finish Flag is inserted against the defect at the finish footage and the same Flag number is used to finish the defect off (S1 MUST finish with an F1 and so on). This aids the Rig Manager in reporting repeating defects without having to enter the code at every joint footage or every 3 feet.

  Note: The defect that has the start flag against it can change its position (i.e. a FL or CL) but not its magnitude (i.e. you cannot start with a CL and finish with a FL. You must "close", or finish, the defect with the appropriate Finish Flag and then start the new defect with an UNUSED (in the current inspection) Start Flag.
- If the inspection was abandoned (SA), then a reason for the abandonment MUST be entered in the Remarks column against the SA code. The description of the reason for the SA should contain the appropriate defect code that has caused the abandonment (i.e. If due to an intruding connection then the end of the report would read:

11025	342.8	CNI	04	11	02	
11025	342.8	SA				DUE TO CNI

- If you are unsure of the defect magnitude (an FL or CL, for instance) then enter the worst code of the two, with its support information, and then in Remarks enter: CL ??

i.e.	00327	301.2	FL	11	CL??

- All defects and features MUST have the relevant support data (i.e. JN/CN must have sizes and positions. See Defect Code list for details)

General Inspection Logging Requirements

(to be read in conjunction with other related documentation, i.e. Manual of Sewer Condition Classification):

The first three lines of each set of survey details **must** have the codes ST, MH, and WL (WL is optional but is important to the City of Atlanta as it directly relates to the sewer flow level at a certain time of day).

The Manhole Number must be entered in the Remarks column against the MH code (this is essential as a number of Data Interrogation packages stores the Header and Detail records separately which are "connected" by an Index. To ensure data integrity, a QC check can be run against the Detail information to confirm that the correct Details are against the relevant Header).
i. e.:

```
0D10230    0.0  ST
0D1        0.0  MH          SJ34255521
0D1        0.0  WL         10
```

Each line of Detail (or as a minimum the first and last Detail lines) must have the video digit entered against each code, presented in the following way:
– The video digits must conform to the National elapsed time based standards (time into the tape) for Video Tape recorders:

- Always four digits (hmms, where s = units of 10 seconds).
- Always right justified and zero filled.
- The following elapsed time format MUST be adhered to, i.e.:

```
0230
0        = Number of hours (Zero hours).
  23     = Number of minutes (23 minutes).
     0   = Units of 10 seconds each (0 seconds).
```

Other examples:

```
0032     = 3 minutes and 20 seconds into the tape.
0244     = 24 minutes and 40 seconds into the tape.
1503     = 1 hour,  50 minutes and 30 seconds into the tape.
2451     = 2 hours, 45minutes and 10 seconds into the tape.
```

The final detail line for each survey must end with a Termination code, either SA or FH.

i.e.

```
0D1        89.0  RMJ         30
0D1        89.0F1JDS
0D10410    89.0  SA          DUE TO ROOTS MASS
    ------------  or  -------------
0D1        33.0  D           10
0D1        34.9  MH          SJ35513464
0D10670    34.9  FH
```

Each Survey Report MUST only contain one survey hence, in the case of Survey Abandonment or a buried or uncharted manhole being encountered, a new Header and Detail must be completed. The above are essential for the Validation of the data to take place

[This page intentionally left blank]

DRAFT
CITY OF ATLANTA – INTERNAL CONDITION ASSESSMENT LOG

CD Volume Label | Contractor/Inspector | Basin Number | Sub Basin Number | Reverse | Spare | PLR

Date (mmddyy) | Time | Address (Street Number, NSEW, Name, Type, NSEW, Apt #) | Outfall / Trunk Name

Start Manhole | Start Depth | Start Cover | Start Invert | Finish Manhole | Finish Depth | Finish Cover | Finish Invert

Use | Direction | Size 1 Dia/Hght | Size 2 Width | Shape | Material / | Lining | Pipe Length | Total Length | Year Laid

Video Name | Spare | Comments

Purpose | Weather | Location | Location Details | Category Code | Pre-Cleaned

Video No.	Photo.No./S VC.No	Distance	Cont. Defect	Code	Diameter	Circumferential Clock At	Circumferential Clock To	Percent / Intrusion	Remarks

CD Volume Label	Contractor/Inspector	Date	Time	PLR

Video No.	Photo No.	Distance	Cont. Defect	Code	Diameter	Circumferential Clock At	Circumferential Clock To	Percent / Intrusion	Remarks

ATTACHMENT E

SERVICE LATERAL DOCUMENTATION

[This page intentionally left blank]

Launch From Main:

CD Volume Label	Contractor/Inspector	Basin Number	Sub Basin Number	Reverse	Spare	PLR
PTO1XXAGCT01	AG CT	PTC	01			23260112301

Date (mmddyy)	Time	Address (Street Number, NSEW, Name, Type, NSEW, Apt #)						Outfall / Trunk Name
90502	1245	1234		PEACHTREE	RD	NE		

Start Manhole	Start Depth	Start Cover	Start Invert	Finish Manhole	Finish Depth	Finish Cover	Finish Invert
23260112301	6.00			23260123401	6.00		

Use	Direction	Size 1 Dia/Hght	Size 2 Width	Shape	Material /	Lining	Pipe Length	Total Length	Year Laid
F	D	8		C	CO		3	70.3	

Video Name	Spare	Comments
00000		

Purpose	Weather	Location	Location Details	Category Code	Pre-Cleaned
B	1	B			N

Video No.	Photo/Svc No.	Distance	Cont. Defect	Code	Diameter	Circumferential Clock At	Circumferential Clock To	Percent / Intrusion	Remarks
10020		0.0		ST					
10020		0.0		MH					23260112301
10110	01	22.1		JN	4	12			INSPECTION FROM CLEANOUT
10202	02	35.2		CN	4	11			SVC INSPECT
11030	03	50.6		CN	4	09			SVC INSPECT
11655		70.3		MH					23260123401
11655		70.3		FH					

From Clean Out:

CD Volume Label	Contractor/Inspector	Basin Number	Sub Basin Number	Reverse	Spare	PLR
CCO1XXCECN01	CE CN	CMC	01			23260112301

Date (mmddyy)	Time	Address (Street Number, NSEW, Name, Type, NSEW, Apt #)						Outfall / Trunk Name
90502	1245	1268		PEACHTREE	RD	NE		

Start Manhole	Start Depth	Start Cover	Start Invert	Finish Manhole	Finish Depth	Finish Cover	Finish Invert
23260112301_01	6.00			23260123401	6.00		

Use	Direction	Size 1 Dia/Hght	Size 2 Width	Shape	Material /	Lining	Pipe Length	Total Length	Year Laid
F	D	4		C	VC		3	55	

Video Name	Spare	Comments
00001		

Purpose	Weather	Location	Location Details	Category Code	Pre-Cleaned
B	1	F	=SERVICE LINE=		N

Video No.	Photo/Svc No.	Distance	Cont. Defect	Code	Diameter	Circumferential Clock At	Circumferential Clock To	Percent / Intrusion	Remarks
10020		0.0		ST					
10020		0.0		MH					23260112301_01 (CO)
10320		55		FH					MAIN LINE REACHED

ATTACHMENT F

SEWER1.DAT DATA SPECIFICATION
AND
EXAMPLE OF SEWER1.DAT DATA FILE

[This page intentionally left blank]

CCTV data transfer: Sewer1.Dat Description and Inspection Guidelines

Overview:

The Sewer1.dat Inspection data transfer format has been in existence since 1984. Sewer1.dat has been developed because the technology available now means that longer lengths are being inspected resulting in the need for higher "numbers" being achieved and longer manhole identifiers are becoming the "norm". Sewer1.dat reflects these needs.

Sewer1.dat is an "open architecture" format and was devised by a UK Government body called WRc to ensure that inspection data could be transferred between many applications and that no one contractor or software supplier had monopoly on inspection data input/interrogation software.

Sewer1.dat format basis is derived from the site data input form found in the Manual of Sewer Condition Classification Ver. 2 and 3. without the guideline boxes. Copies of the Manual are easily available. The form has been further customized for the City of Atlanta's specific needs following the same general format.

There are at least 15 specialist software programs around worldwide that accepts this format, and can be imported into ACCESS, Dbase V (with the Sewer1.dat fields properly defined within such applications) and Geographical Information Systems.
The specification for the format is "free issue" and devoid of "control characters" that can be found in some bespoke applications/data transfer specs.

A number of companies offer a free service to Contractors who wish to export to the Sewer1.dat format from their data handling software to test the correctness of the format and offer advice when necessary.

To ensure that the data transfer file format is correct the following points are to be adhered to:

- Some Field labels are available for the Contractor's use for their own purpose. These are labeled "Spare".
- The file is to be in a standard ASCII text format (i.e. no control characters) therefore each line in the file should be terminated by an ASCII carriage return/linefeed combination i.e. ASCII code 13 followed by ASCII code 10 (the default termination on most text generating programs).
- *The maximum line length must not exceed 81 characters including the ASCII termination code, except for Line 1 where the contractor can have their own reference after the 80th character. Other information could be added after the last character in each line (except for Line 1) if the software that the data is going into is set up to import this extra data. Line 2, for instance, the position from character 64 to 81 is unused.*

- Decimal points must not be in any header field. The Format describes the mask of the field; the Actual Format shows how it should have been originally recorded/reported.
- Each Header line must start with a three character identifier "1H*n*", *n* being between 1 and 6. The “1” before the “H” denotes that it is a Sewer1.dat specification.
- Each Detail line must start with a three character identifier "1D1". The “1” before the “D” denotes that it is a Sewer1.dat specification.
- Decimal points must be in Detail footage.
- N = Numeric ONLY field. If the Format is unspecified then Alpha Numeric characters are acceptable.

DATA TRANSFER SPECIFICATION

		Start Position	Number of Characters	Format/Actual Format ----------Or Notes--------
Line 1	"1H1"	1	3	Line Identifier
	CD Volume Label	4	12	As per City Guidelines
	Contractor/Inspector	16	8	*----------Ditto---------
	Basin Number	24	10	*i.e. PTC or PTC-PRC
	Sub Basin Number	34	10	*i.e. 32/33/34
	Reverse		44	1Indicate Y if reverse setup
	Spare	45	3	For Contractors Use
	PLR	48	17	Upstream Mh No. + X or Y

*** Specific format and Information supplied by City of Atlanta**

Line 2	"1H2"	1	3	Line Identifier
	Date	4	8	MMDDYYYY
	Time	12	4	hhmm
	Road Name	16	30	Where Upstream Mh is.**
	Place Name	46	20	Local name

**** Specific format and Instructions for completion to be supplied by City of Atlanta**

Line 3	"1H3"	1	3	Line Identifier
	Start Manhole	4	16	
	Start Depth	20	5	(NNNNN) (nnn.nn)
	Start Cover	25	6	(NNNNNN)(nnnn.nn)
	Start Invert	31	6	(NNNNNN)(nnnn.nn)
	Finish Manhole	37 (was 38)	16	
	Finish Depth	53	5	(NNNNN)(nnn.nn)
	Finish Cover	58	6	(NNNNNN)(nnnn.nn)
	Finish Invert	64	6	(NNNNNN)(nnnn.nn)

Line 4	"1H4"	1	3	Line Identifier
	Use	4	1	
	Direction	5	1	Direction of inspection U/D
	Size 1	6	4	(NNNN)(nnnn)
	Size 2	10	4	(NNNN)(nnnn)
	Shape	14	1	
	Material	15	3	
	Lining	18	3	
	Pipe Length	21	4	(NNNN)(nnn.n)
	Total Length	25	5	(NNNNN)***(nnnn.n)
	Year Laid	30	4	

***** Distance between the St. and Fh. Manholes, NOT inspected length unless the inspection was completed where it would be the same as the Inspected length.**

Line 5	"1H5"	1	3	Line Identifier

	Video Name	4	5	e.g. 00000, 00001, etc.
	Spare	9	10	
	Comments	19	40	
Line 6	"1H6"	1	3	Line Identifier
	Purpose	4	1	
	Weather	5	1	
	Location	6	1	
	Location Details	7	50	
	Category Code	57	1	
	Pre-Cleaned	58	1	
Details	"1D1"	1	3	Line Identifier
	Video Digit.	4	5	(NNNNN)(nnnnn)
	Photo/Svc No. (see Note 2.)	9	4	(NNNN)(nnnn)
	Distance	13	6	(NNNN.N)(nnnn.n)
	CD	19	2	Cont. Defect column
	Code	21	5	
	Diameter	26	4	(NNNN)(nnnn)
	Clock At	30	2	(NN)(nn)
	Clock To	32	2	(NN)(nn)
	***Percentage %**	34	2	(NN)(nn)
	***Intrusion**	34	4	(NNNN)(nnnn)
	Remarks	38	30	

***Note:** The position from character 29 to 32 is a shared field in that there is no defect or feature that would have both Percentage and Intrusion, hence if a Percentage the Start position would be 29 for two characters (99% max), and if an Intrusion the Start position would also be 29 but zero filled (20 inches would be 0020, for instance).

Note 2. In addition to the standard use as described in the Manual of Sewer Condition Classification, this field will also be used to number service connections/junctions in accordance with the attached clarification on CCTV Inspection of Private Service Connections and Junctions.

Example of Sewer1.Dat Data File on Diskette

```
1H1CC02BXCECN02CECN    CMC       02B          13930201601
1H20829200209162731 BLACK FOREST TR SW
1H313930201601     00915          13930201701     01427
1H4FD0008    CCO    004001881
1H5C0003
1H6B1B                          N
1D100027    0000.0  ST
1D100057    0000.0  MH      MANHOLE 13930201601
1D100113    0000.0  WL      05
1D100532    0002.3  JN      000603      MATERIAL CO
1D100942    0005.1  JN      000609      MATERIAL CO
1D101253    0046.0  ELJ     070805
1D101427    0049.6  B       0304
1D101511    0051.4  JN      000603      MATERIAL CO
1D101619    0052.7  JDM     0105
1D101759    0068.5  FL      12
1D101924    0076.2  ELJ     010205
1D102056    0095.9  ELJ     030505
1D102214    0098.8  CX      000611      MATERIAL CO
1D102345    0105.1  JNA     000609      MATERIAL CO
1D102607    0138.3  FL      12
1D102713    0148.3  FL      12
1D102816    0159.6  JN      000603      MATERIAL CO
1D103002    0182.2  JX      000609      MATERIAL CO
1D103127    0188.1  MH      MANHOLE 13930201701
1D103151    0188.1  FH
```

END OF SECTION

[This page intentionally left blank]

SECTION 02757

Point Repair of Sanitary Sewers

PART 1 – GENERAL

1.01 SCOPE

A. This Section describes repairs to sections of existing sanitary sewers that require correction of isolated major defects, misalignments or collapses.

B. External Point repairs include necessary external corrective action by means of open cut trench pipe replacement/renewal construction, both as an independent solution to a specific problem or to facilitate other rehabilitation methods such as pipe-bursting or lining.

C. Internal Point Repairs include necessary internal corrective action using a short length tightly fitting cured-in-place (CIPP) liner for the local repair of an isolated defect or several adjacent defects that can be encompassed within the material length of an internal CIPP point repair within a sanitary sewer pipeline. The liner shall be smooth, hard, strong, chemically inert and free from blemishes.

D. Furnish all products and perform all labor necessary to fulfill the requirements of these Specifications.

1.02 APPLICABLE REHABILITATION METHODS

A. This specification applies to the following repair methods, varying only in length and purpose of repair as described below.

1. Pipe Blockage External Point Repair - This rehabilitation method is for correcting a major offset, blockage or other type of restriction of a pipeline that would reasonably impede or prohibit pipe-bursting or push-bursting operations. Pipe Blockage Repair includes excavation, maintaining the trench until the new HDPE piping is in place after pipe-bursting, backfill and site restoration.

2. Sanitary Sewer Sag External Point Repair - This rehabilitation method is for correcting a sag in a mainline so that pipe-bursting, horizontal directional drilling or push-bursting may proceed to line and grade. A Sag Repair means correcting a sag in a segment of pipeline where the lowest point of the “Sag” is subject to ponding that is greater than 25% of the diameter of the pipeline. Sag Repair includes excavation, maintaining the trench until the new piping is installed, backfill and site restoration including disposal of all excavated waste material.

3. External Point Repair - This rehabilitation method is for correcting a defect on a mainline that requires excavation. Pipe defect(s) may include collapsed pipe (>10% deformation), severely broken pipe, major dropped joint, major offset joint, or a severely defective service line connection. This type of repair shall include excavation, replacing a section of pipe up to sixteen (16) linear feet in length; replacing up to one (1) service connection, installation of flexible repair couplings or boots as applicable, backfill, disposal and site restoration

   All pipe and fittings furnished for this work must comply with the requirements of Section 02730 of the Contract Documents. The replacement pipe section shall be the same size and material as the existing pipe unless the existing pipe is vitrified clay. In such case, PVC shall be used as the pipe section material unless otherwise directed by the Engineer.

   It is the Contractor's sole responsibility to establish elevation and/or survey controls necessary to attain true line and grade for the replacement pipe section for all External Point Repairs. No abrupt deflections in line or grade will be allowed.

4. Internal CIPP Point Repair - This rehabilitation method is for correcting a defect on a mainline that can be rectified internally. Pipe defect(s) may include multiple cracks, fractures, deformed pipe (<10% deformation), minor dropped joint, minor offset joint, or a minor defective service line connection. This type of repair shall include lining a limited section of pipe up to seven (7) linear feet in length. Several internal point repairs may be installed in a single segment (length of sewer between manholes) to be determined by the Engineer.

   All pipe and fittings furnished for this work must comply with the requirements of Section 02730 of the Contract Documents.

B. Point repairs are made at specific locations and involve relatively short lengths of sewer. Isolation of affected reaches of sewer, by plugging and/or bypass pumping if required, shall be performed in accordance with Section 02750 of the Contract Documents.

C. After each designated Point Repair has been made, the Contractor will perform a CCTV inspection in accordance with Section 02752. The CCTV video and inspection report will be submitted to the City for review. The cost of the CCTV inspection shall be included in the unit price for the Point Repair. If a repaired joint or section should subsequently prove to be defective, the Contractor shall re-perform the work at no additional cost to

the City and shall also be responsible for the costs of any re-inspection required by the City to document the success of the re-work.

D. Excavation, backfill, resolution of conflicts with other utilities, and miscellaneous work shall conform to the requirements of Sections 02730 and 02200 of the Contract Documents as appropriate.

1.03 SUBMITTALS

A. The Contractor shall submit shop drawings for external point repair pipe material, couplings, CIPP point repair material and delineate staging, traffic control, and access arrangement when the complexity of the repair warrants, as determined by the Engineer and in accordance with Section 01340 of the Contract Documents.

B. All internal CIPP point repair submittals shall comply with the related requirements of Section 02520.

PART 2 – PRODUCTS

2.01 PIPE AND PIPE FITTINGS

A. All pipe and fittings for external point repairs shall be PVC, reinforced concrete pipe (RCP) or ductile iron pipe (DIP) as specified in Section 02730.

B. All related sections for internal CIPP point repairs, materials, specifications, trial tests, warranty and standards for CIPP point repairs shall comply with the requirements of Section 02520, where applicable with the exception that only epoxy resins shall be used with internal CIPP point repairs.

PART 3 – EXECUTION

3.01 GENERAL

A. The Contractor shall furnish all labor, tools, materials, and equipment necessary for installation and jointing of the pipe. All piping and lining shall be installed in accordance with the Contract Documents in a neat workmanlike manner and shall be set for accurate line and elevation. All piping shall be thoroughly cleaned before installation, and care shall be taken to keep the piping clean throughout the installation.

3.02 PREPARATION

A. Flow Control: Flow control shall be exercised as required to ensure that no flowing sewage comes into contact with sections of the sewer under repair or replacement in accordance with Section 02750 of the Contract Documents.

B. Preconditioning and Cleaning (Manholes and) Sewer – Prior to installation of the CIPP point repair the entire sewer shall be preconditioned and cleaned in accordance with the requirements of Section 02511. Installation of CIPP point repair shall not proceed without the Engineers written permission.

C. The engineers permission to proceed will be contingent on the acceptance of an internal condition assessment video of the prepared sewer to confirm that the sewer is free from all debris and inherent conditions that may adversely affect the smooth introduction of the CIPP point repair into the sewer to be repaired. The internal condition assessment shall accurately portray the position of defects and laterals affected by the proposed remediation. Any lateral introduced into the sewer being treated at the location of the CIPP point repair shall be introduced within the middle third of the repair. Internal condition assessment prior and post lining shall be included in the cost of the repair.

REQUIREMENTS SPECIFIC FOR THE CONSTRUCTION OF EXTERNAL POINT REPAIRS.

3.03 REMOVAL AND REPLACEMENT OF SEWER

A. After the limits of a particular portion of the existing sewer have been established on the ground, operations shall progress generally as follows:

1. Carefully remove or protect surface features in work area. Expose a full section of existing pipe, including the joints at each end. Take adequate precautions not to disturb any other existing underground facilities. Handle all excavated materials as described in Section 02200 of the Contract Documents.

2. That section of pipe to be replaced shall be isolated by plugging and/or bypass pumping as described in Sections 02750 of the Contract Documents, or by any other method proposed by the Contractor and acceptable by the City.

3. After the defect is located and exposed, the defective pipe or fitting shall be removed by cutting each side along lines perpendicular to longitudinal axis of pipe so as to leave "spigot ends" to be connected

to replacement pipe and dispose of the existing pipe and concrete encasement, if any.

4. Excavate the trench to a minimum of 8-inches below the proposed pipe bottom, place bedding material in the trench and shape to form continuous uniform support for the pipe barrel.

5. Pipe shall be installed and jointed, normally beginning at its low or outlet end and proceeding upstream, with the bell ends facing upstream toward the direction of flow. Make connections to existing manholes or existing pipe remaining in place. Install wyes or tees, with branches temporarily plugged, to make reconnections to existing service laterals, if any. Complete bedding or encasement and place compacted backfill as necessary to avoid flotation if water should enter the trench. Encasement will only be allowed if the Engineer confirms that future pipe-bursting will not be required.

6. Complete placement and compaction of backfill. For purposes of the external point repair, the material excavated is considered suitable backfill, provided the excavated material meets the requirements of section 02200 for suitable backfill.

7. Restore surface features to at least as good condition as existed before construction began, including landscaping, grass, roadways, driveways and walks.

8. For External Point Repairs only, perform leakage test in accordance with Section 02730.

3.04 EXCAVATION AND BACKFILL

A. The Contractor shall excavate and backfill in accordance with Section 02200 of the Contract Documents. Under no circumstances shall the Contractor be allowed to remove concrete or asphalt without prior saw cutting. The saw cutting shall be deep enough to produce an even, straight cut.

3.05 LAYING PIPE

A. Proper and suitable tools and appliances for the safe convenient handling and laying of pipe shall be used and shall, in general, agree with manufacturer's recommendations. At the time of laying, the pipe shall be examined carefully for defects, and should any pipe be discovered to be defective after being laid, it shall be removed and replaced with sound pipe by the Contractor at his expense.

B. Upon satisfactory completion of the pipe bedding, a continuous trough for the pipe barrel and recesses for the pipe bells, or couplings, shall be

excavated by hand digging. When the pipe is laid in the prepared trench, true to line and grade, the pipe barrel shall receive continuous, uniform support and no pressure shall be exerted on the pipe joints from the trench bottom.

C. Pipe shall be installed in accordance with the manufacturer's recommendation. Before being lowered into the trench, the pipes and accessories shall be carefully examined and the interior of the pipes shall be thoroughly cleaned of all foreign matter and other methods acceptable to the City.

D. Lines shall be laid straight and depth of cover shall be maintained uniform with respect to finish grade, whether grading is completed or proposed at time of pipe installation. No abrupt changes in direction or grade will be allowed.

E. After pipe has been laid, reviewed and found satisfactory, sufficient backfill shall be placed along the pipe barrel to hold the pipe securely in place during the test. No backfill shall be placed over the joints until the test is satisfactorily completed, leaving the exposed joints to view for the detection of visible leaks. Upon satisfactory completion of the test, backfilling of the trench shall be completed.

3.06 INSTALLATION OF PIPE

A. PVC, RCP and DIP shall be installed in accordance with Section 02730.

3.07 PIPE-TO-PIPE CONNECTIONS

A. Pipe-to-pipe connections shall be made in accordance with Section 02730 by using flexible banded couplings or adapters, couplings with compression joints in compliance with ASTM C 425.

3.08 PIPE-TO-MANHOLE CONNECTIONS

A. When a sound pipe stub-out exists from a manhole to which connection is to be made, a pipe-to-pipe connection shall be made as described above. If one is not present or is faulty, an opening shall be cut in the manhole wall and the connection, consisting of a pipe stub-out with an EPDM rubber boot assembly grouted into the opening with non-shrink grout shall be made to form a corrosion resistant, watertight seal. The invert, benches and floor inside the manhole shall be cut and reshaped as necessary.

3.09 TELEVISION INSPECTION

A. Post Construction CCTV inspection in accordance with Section 02752 of the Contract Documents is required for all Internal and External Point

Repairs on sanitary sewers. The Post Construction CCTV inspection is not required for Pipe Blockage Repairs or Sanitary Sewer Sag Repairs performed prior to pipe-bursting pipe replacement. The repairs shall demonstrate the full and effective rectification of the extant defect and/or obstruction, including infiltration etc., to the complete satisfaction of the Engineer.

3.10 TRAFFIC CONTROL

A. Refer to Specification Section 01500: Temporary Control of Construction Operations for requirements.

END OF SECTION

[This page intentionally left blank]

SECTION 02900

Landscaping

PART 1 – GENERAL

1.01 SCOPE

A. Provide trees, plants, and ground covers as shown and specified. The work includes:

1. Soil preparation.
2. Trees, plants, and ground covers.
3. Planting mixes.
4. Mulch and planting accessories.
5. Existing tree care.
6. Filling around trees to remain.
7. Maintenance.

1.02 RELATED SECTIONS

A. The Work of the following Sections specifically apply to the Work of this Section. Other Sections of the Specifications, not referenced below, shall also apply to the extent required for proper performance of Work.

1. Section 02200: Earthwork
2. Section 02270: Vegetative Erosion Control

1.03 PROJECT CONDITIONS

A. Work notification: Notify Engineer at least 7 working days prior to installation of plant material.

B. Protect existing utilities, paving, and other facilities from damage caused by landscaping operations.

C. A complete list of plants, including a schedule of sizes, quantities, and other requirements is shown on the drawings. In the event that quantity

discrepancies or material omissions occur in the plant materials list, the planting plans shall govern.

D. The irrigation system may be installed prior to planting. Locate, protect, and maintain the irrigation system during planting operations. Repair irrigation system components, damaged during planting operations, at Contractor's expense.

1.04 CONTRACTOR SUBMITTALS

A. Submittals shall be made in accordance with the requirements of the General Conditions of the Contract Documents. In addition, the following specific information shall be provided:

1. Mulch samples.

2. Planting accessories samples.

3. Certification for topsoil source and pH value; peat moss and plant fertilizer.

4. Material test reports.

5. Upon plant material acceptance, submit written maintenance instructions recommending procedures for maintenance of plant materials.

6. Plant material record drawings:

7. Legibly mark drawings to record actual construction.

8. Indicate horizontal and vertical locations, referenced to permanent surface improvements.

9. Identify field changes of dimension and detail and changes made by Change Order.

1.05 QUALITY ASSURANCE

A. Comply with Section 02200 and 02270 requirements.

B. Plant names indicated, comply with "Standardized Plant Names" as adopted by the latest edition of the American Joint Committee of

Horticultural Nomenclature. Names of varieties not listed conform generally with names accepted by the nursery trade. Provide stock true to botanical name and legibly tagged.

C. Comply with sizing and grading standards of the latest edition of "American Standard for Nursery Stock". A plant shall be dimensioned as it stands in its natural position.

D. All plants shall be nursery grown under climatic conditions similar to those in the locality of the project for a minimum of 2 years.

E. Stock furnished shall be at least the minimum size indicated. Larger stock is acceptable, at no additional cost, and providing that the larger plants will not be cut back to size indicated. Provide plants indicated by two measurements so that only a maximum of 25% are of the minimum size indicated and 75% are of the maximum size indicated.

F. Provide "specimen" plants with a special height, shape, or character of growth. Tag specimen trees or shrubs at the source of supply. The Engineer will inspect specimen selections at the source of supply for suitability and adaptability to selected location. When specimen plants cannot be purchased locally, provide sufficient photographs of the proposed specimen plants for approval.

G. Plants may be inspected and approved at the place of growth, for compliance with specification requirements for quality, size, and variety.

1. Such approval shall not impair the right of inspection and rejection upon delivery at the site or during the progress of the work.

H. Provide and pay for material testing. Testing agency shall be acceptable to the Engineer. Provide the following data:

1. Test representative material samples proposed for use.

2. Topsoil:

a. pH factor.

b. Mechanical analysis.

c. Percentage of organic content.

d. Recommendations on type and quantity of additives required to establish satisfactory pH factor and supply of nutrients to bring nutrients to satisfactory level for planting.

3. Peat Moss:

a. Loss of weight by ignition.

b. Moisture absorption capacity.

I. All local, municipal and state laws and rules and regulation governing or relating to any portion of this work shall be incorporated into these specifications and their provisions shall be carried out by the contractor.

1. City of Atlanta Tree Protection Ordinance, Section Code #158

2. City of Atlanta Consent Decree for Greenway Properties, Section M & N.

PART 2 – PRODUCTS

2.01 MATERIALS

A. Plants: Provide plants typical of their species or variety; with normal, densely-developed branches and vigorous, fibrous root systems. Provide only sound, healthy, vigorous plants free from defects, disfiguring knots, sunscald injuries, frost cracks, abrasions of the bark, plant diseases, insect eggs, borers, and all forms of infestation. All plants shall have a fully developed form without voids and open spaces. Plants held in storage will be rejected if they show signs of growth during storage.

1. Dig balled and burlapped plants with firm, natural balls of earth of sufficient diameter and depth to encompass the fibrous and feeding root system necessary for full recovery of the plant. Provide ball sizes complying with the latest edition of the "American Standard for Nursery Stock". Cracked or mushroomed balls are not acceptable.

2. Container-grown stock: Grown in a container for sufficient length of time for the root system to have developed to hold its soil together, firm and whole.

a. No plants shall be loose in the container.

b. Container stock shall not be pot bound.

3. Provide tree species that mature at heights over 25 feet with a single main trunk. Trees that have the main trunk forming a "Y" shape are not acceptable.

4. Plants planted in rows shall be matched in form.

5. Plants larger than those specified in the plant list may be used when acceptable to the Engineer.

    a. If the use of larger plants is acceptable, increase the spread of roots or root ball in proportion to the size of the plant.

6. The height of the trees, measured from the crown of the roots to the top of the top branch, shall not be less than the minimum size designated in the plant list.

7. No pruning wounds shall be present with a diameter of more than 1" and such wounds must show vigorous bark on all edges.

8. Evergreen trees shall be branched to the ground.

9. Shrubs and small plants shall meet the requirements for spread and height indicated in the plant list.

    a. The measurements for height shall be taken from the ground level to the height of the top of the plant and not the longest branch.

    b. Single stemmed or thin plants will not be accepted.

    c. Side branches shall be generous, well-twigged, and the plant as a whole well-bushed to the ground.

    d. Plants shall be in a moist, vigorous condition, free from dead wood, bruises, or other root or branch injuries.

2.02 ACCESSORIES

A. Topsoil for Planting Beds and Tree Pits: Fertile, friable, natural topsoil of loamy character, without admixture of subsoil material, obtained from a well-drained arable site, reasonably free from clay, lumps, coarse sands, stones, plants, roots, sticks, and other foreign materials, with acidity range of between pH 6.0 and 6.8.

    1. Topsoil that has been stripped and stockpiled on site shall be the topsoil to be utilized on this project. Provide additional topsoil if necessary.

2. Provide topsoil free of substances harmful to the plants which will be grown in the soil. Provide 12-inches of topsoil in all plant beds and tree pits.

3. Planting mixture shall be composed of four (4) parts topsoil, two (2) parts peat moss, one (1) part sharp sand and one (1) part well rotted manure, mixed together thoroughly, and worked into existing soil.

B. Peat Moss: Brown to black in color, weed and seed free granulated raw peat or baled peat, containing not more than 9% mineral on a dry basis. Finely chipped or shredded organic pine bark planting mixture materials which is locally available and readily used and accepted by local professional landscaper can also be substituted if accepted prior to use.

1. Provide ASTM D2607 sphagnum peat moss with a pH below 6.0 for ericaceous plants.

C. Fertilizer:

1. Plant Fertilizer Type "A": Commercial type approved by the Engineer, containing 5% nitrogen, 10% phosphoric acid, and 5% potash by weight. 1/4 of nitrogen in the form of nitrates, 1/4 in form of ammonia salt, and 1/2 in form of organic nitrogen.

2. Plant Fertilizer Type "B": Approved acid-base fertilizer.

D. Anti-Desiccant: Protective film emulsion providing a protective film over plant surfaces; permeable to permit transpiration. Mixed and applied in accordance with manufacturer's instructions.

E. Premium grade shredded pine bark 3/4" to 1-1/2" diameter. Furnish in - 3 cu. ft. bags or bulk.

F. Water: Free of substances harmful to plant growth. Hoses or other methods of transportation furnished by Contractor.

G. Stakes for Staking: Hardwood, 2" x 2" x 8'-0" long.

H. Stakes for Guying: Hardwood, 2" x 2" x 36" long.

I. Guying/Staking/Wire: No. 10 or 12, gage galvanized wire.

1. For large trees (4" caliper and greater) use turnbuckles and heavier gage wire as indicated below

a. Stakes for Staking: Hardwood, 4"x 4"x 8'-0" long.

b. Guying/Staking/Wire: No. 6 or 8 gage galvanized wire.

2. Turnbuckles: Galvanized steel of size and gage required to provide tensile strength equal to that of the wire. Turnbuckle openings shall be at least 3".

J. Staking and Guying Hose: Two ply, reinforced garden hose not less than 1/2" inside diameter.

K. Tree Wrap: Standard waterproofed tree wrapping paper, 2-1/2" wide, made of 2 layers of crepe kraft paper weighing not less than 30 lbs. per ream, cemented together with asphalt. Tree wrap shall be removed at 12 months after installation of plant material.

L. Twine: Two-ply jute material.

M. Soil Separator: Rot resistant polypropylene filter fabric, water permeable, and unaffected by freezing and thawing.

N. Drainage Tile: ASTM F405 corrugated polyethylene drainage tubing, perforated.

O. Drainage Fill: AASHTO M43 #6(3/8" to 3/4") clean uniformly graded stone or gravel.

P. Pine Straw mulch: Baled pine straw used in mulching operations shall be capable of producing desired results and not contain excessive amounts of pine cones, branches or forest litter, mold or moss. Each bale shall be capable of covering a minimum of fifty (50) square feet, four (4”) thick during initial installation.

PART 3 – EXECUTION

3.01 DELIVERY, STORAGE, AND HANDLING

A. Deliver fertilizer materials in original, unopened, and undamaged containers showing weight, analysis, and name of manufacturer. Store in manner to prevent wetting and deterioration.

B. Take all precautions customary in good trade practice in preparing plants for moving. Workmanship that fails to meet the highest standards will be rejected. Spray deciduous plants in foliage with an approved "Anti-Desiccant" immediately after digging to prevent dehydration. Dig, pack, transport, and handle plants with care to ensure protection against injury.

Inspection certificates required by law shall accompany each shipment invoice or order to stock and on arrival, the certificate shall be filed with the Engineer. Protect all plants from drying out. If plants cannot be planted immediately upon delivery, properly protect them with soil, wet peat moss, or in a manner acceptable to the Engineer. Water heeled-in plantings daily. No plant shall be bound with rope or wire in a manner that could damage or break the branches.

C. Cover plants transported on open vehicles with a protective covering to prevent wind burn.

D. Provide dry, loose topsoil for planting bed mixes. Frozen or muddy topsoil is not acceptable

3.02 INSPECTION

A. Examine proposed planting areas and conditions of installation. Do not start planting work until unsatisfactory conditions are corrected.

3.03 CARE OF TREES TO REMAIN

A. Minor fills of 6" or less: Fill with topsoil; hand grade to required finish grade elevation.

B. Moderate fills of 12" or less: Place layer of 3/4" to 1-1/2" stone or gravel on grade. Provide aggregate depth 1/2 of fill height, minimum of 3". Cover drainage fill with polypropylene filter fabric or 1" thickness straw choke. Fill remaining depth with loose topsoil; hand grade to required finish grade elevations.

C. Deep fills over 12": Place layer of 3/4" to 1-1/2" stone or gravel on grade. Extend drainage fill to within 2" of required finish grade. Cover drainage fill with polypropylene filter fabric or 1" thickness straw choke. Fill remaining depth with loose topsoil; hand grade to required finish grade elevation. Provide tile drainage system and vents as indicated.

D. Deep fills over 18": Place 4" depth of 1" to 2" stone or gravel fill on grade, extending three (3) feet beyond the outer branch drip line around tree branch perimeter. Cover drainage fill with polypropylene filter fabric or 1" thickness straw choke. Place 1" to 2" stone or gravel fill around tree trunk, extending to within 2" of required finish grade elevation. Fill remaining depth with loose topsoil; hand grade to required finish grade elevation. Do not place earth fill in contact with tree trunk, maintain 18" diameter of drainage fill exposed at finish grade.

3.04 PREPARATION

A. Time of planting:

1. Evergreen material: Plant evergreen materials between September 1 and November 1 or in spring before new growth begins. If project-I requirements require planting at other times, plants shall be sprayed with anti-desiccant prior to planting operations.

2. Deciduous material: Plant deciduous materials in a dormant condition. If deciduous trees are planted in-leaf, they shall be sprayed with an anti-desiccant prior to planting operation.

3. Planting times other than those indicated shall be acceptable to the Engineer.

B. Planting shall be performed only by experienced workmen familiar with planting procedures under the supervision of a qualified supervisor.

C. Locate plants as indicated or as approved in the field after staking by the Contractor. If obstructions are encountered that are not shown on the drawings, do not proceed with planting operations until alternate plant locations have been selected.

D. Excavate circular plant pits with vertical sides, except for plants specifically indicated to be planted in beds. ALL planting pits shall be at least two times (2X) greater in width than the diameter of the original root system and the planting container, i.e. 12” root ball = 24" diameter wide planting pit. Depth of pit shall accommodate the root system. Provide undisturbed tamped down topsoil to hold root ball at nursery grade as shown on the drawings. If acceptable by the Landscape Architect, the excavated materials from the planting pit can be mixed thoroughly with the approved planting mix soil amendments to provide a transition from nursery soil to existing soil on the site.

E. Provide pre-mixed planting mixture for use around the balls and roots of the plants consisting of planting topsoil and 1/2 lb. plant fertilizer Type "A" for each cu. yd. of mixture.

F. Provide pre-mixed ground cover bed planting mixture consisting of 3 parts planting topsoil to 1 part peat moss and 1/2 lb. plant fertilizer Type "A" per cu. yd. Provide beds a minimum of 12" deep. If slopes are greater than 4 to 1 increase depth to 18".

G. Provide pre-mixed planting mixture for use around the balls and roots of ericaceous plants consisting of 2 part planting topsoil to 1 part sphagnum peat moss and 1/2 lb. plant fertilizer Type "B" per cu. yd. of mixture.

3.05 INSTALLATION

A. Set plant material in the planting pit to proper grade and alignment. Set plants upright, plumb, and faced to give the best appearance or relationship to each other or adjacent structure. Set plant material at the finish grade. No filling will be permitted around trunks or stems. Backfill the pit with planting mixture. Do not use frozen or muddy mixtures for backfilling. Form a ring of soil around the edge of each planting pit to retain water.

1. Water ALL plantings thoroughly during installation; once when planting is backfilled with planting mix half way (fill pit with water and allow soaking in) and again when planting is completed (fill soil ring with water and allow to soak in). If during watering operations the soil ring does not hold water, repair soil ring and water again.

2. Water all plantings thoroughly and deeply.

B. After balled and burlapped plants are set, muddle planting soil mixture around bases of balls and fill all voids.

1. Remove all burlap, ropes, and wires from the tops of balls of trees and remove entirely from all other plant material.

C. Space ground cover plants in accordance with indicated dimensions. Adjust spacing as necessary to evenly fill planting bed with indicated quantity of plants. Plant to within 12" of the trunks of trees and shrubs within planting bed and to within 6" of edge of bed.

NOTE: Provide drainage tiles if Contractor encounters standing water in planting pits or conditions warrant.

D. Drain tile: Install drainage tile with perforations down and closed joints, firmly bedded in minimum 4" layer of granular fill material. Provide full

bearing for each pipe section. Provide continuous slope in the direction of flow.

1. Provide collars and couplings for all in-line joints and elbows for all corners and changes in direction.

2. Provide unperforated run out pipe. Extend drainage tile to out fall indicated and make connection.

3. Obtain required inspections and perform testing before backfilling. Remove obstructions, replace damaged components, and retest system as required. Provide a satisfactory free flowing drainage tile system.

4. Place drainage fill over drain piping after satisfactory testing and acceptance. Compact drainage fill layers not exceeding 6" in loose depth. Exercise care to avoid damage or displacement of installed piping.

   a. Completely cover drain lines to width of at least 6" each side of pipe and above top of pipe to within 18" of finish grade.

   b. Provide soil separator over drainage fill prior to topsoil fill. Overlap a minimum of 6".

5. Install topsoil fill over compacted drainage fill. Compact topsoil fill in layers not exceeding 6" in loose depth. Extend topsoil fill to indicated finish grade elevations. Slope topsoil fill away from building.

F. Mulching:

1. Mulch tree and shrub planting pits and shrub beds with required mulching material 3" deep immediately after planting. Thoroughly water mulched areas. After watering, rake mulch to provide a uniform finished surface.

2. Mulch ground cover beds with mulch 2" deep immediately after planting.

G. Wrapping, guying, staking:

1. Inspect trees for injury to trunks, evidence of insect infestation, and improper pruning before wrapping.

2. Wrap trunks of all trees spirally from bottom to top with specified tree wrap and secure in place.

   a. Overlap 1/2 the width of the tree wrap strip and cover the trunk from the ground to the height of the second branch.

b. Secure tree wrap in place with twine wound spirally downward in opposite direction, tied around the tree in at least 3 places in addition to the top and bottom. Wrapping and twine to be removed 12 months after installation of plant material.

3. Staking/Guying:

a. Stake/guy all trees immediately after lawn seeding or sodding operations and prior to acceptance. When high winds or other conditions which may effect tree survival or appearance occur, the Engineer may require immediate staking/guying.

b. Stake deciduous trees under 3" caliper. Stake evergreen trees under 8'-0" tall.

c. Guy deciduous trees over 3" caliper. Guy evergreen trees over 8'-0" tall.

4. All work shall be acceptable to the Engineer.

H. Pruning:

1. Prune branches of deciduous stock, after planting, to balance the loss of roots and preserve the natural character appropriate to the particular plant requirements. In general, remove 1/4 to 1/3 of the leaf bearing buds, proportion shall in all cases be acceptable to the Engineer. Remove or cut back broken, damaged, and unsymmetrical growth of new wood.

2. Multiple leader plants: Preserve the leader which will best promote the symmetry of the plant. Cut branches flush with the trunk or main branch, at a point beyond a lateral shoot or bud at a distance of not less than 1/2 the diameter of the supporting branch. Make cut on an angle.

3. Prune evergreens only to remove broken or damaged branches.

I. Care of existing trees:

1. Selectively prune existing trees in designated areas, under Engineer's direction. Remove sucker shoots, dead, rubbing, and damaged branching.

2. Fertilize designated existing trees with 2 to 3 lbs. of Type "A" plant fertilizer per inch of trunk diameter, for trees less than 6" diameter and 3 to 5 lbs. for trees greater than 6" diameter.

   a. Fertilize in early spring before growth begins or in late October.

   b. Fertilize at 2' to 3' on center in a triangular pattern to a depth of 18" within the dripline.

   c. Injection or drilling fertilization methods, when used, shall be acceptable subject to Engineer's approval.

3. Water existing trees every 2 weeks or as required until acceptance. Water thoroughly with a sprinkler head soaker hose or hose at a low flow rate as required to allow water to penetrate and soak deeply into the bottom areas of the planting pit. Water the plant in the provided soil saucer that was formed during installation procedures (see 3.04 A). This will direct the supplemental water to each plants root system and allow it to soak deeply into the planting pit and not be wasted to outside areas. Repair any soil saucers that will not adequately hold water during these operations. Always water thoroughly and water deeply.

J. Tree relocation:

1. Transplant trees designated for relocation to locations shown on the drawings. Prune, dig, ball and burlap, move and plant in accordance with specified tree planting requirements and American Nurserymen Standards.

3.06 MAINTENANCE

A. Maintain plantings until completion and acceptance of the entire project.

B. Maintenance shall include pruning, cultivating, weeding, watering, and application of appropriate insecticides and fungicides necessary to maintain plants free of insects and disease.

1. Re-set settled plants to proper grade and position. Restore planting saucer and adjacent material and remove dead material.

2. Tighten and repair guy wires and stakes as required.

3. Remove tree wrapping and twine 12 months after installation of plant material.

4. Correct defective work as soon as possible after deficiencies become apparent and weather and season permit.

5. Water trees, plants, and ground cover beds within the first 24 hours of initial planting, and not less than twice per week until final acceptance.

3.07 ACCEPTANCE

A. Inspection to determine acceptance of planted areas will be made by the Engineer, upon Contractor's request. Provide notification at least 10 working days before requested inspection date.

1. Planted areas will be accepted provided all requirements, including maintenance, have been complied with and plant materials are alive and in a healthy, vigorous condition.

B. Upon acceptance, the Owner will assume plant maintenance.

3.08 CLEANING

A. Perform cleaning during installation of the work and upon completion of the work. Remove from site all excess materials, soils, debris, and equipment. Repair damage resulting from planting operations.

3.09 WARRANTY

A. Warrant plant material to remain alive and be in healthy, vigorous condition for a period of 1 year (2 years for Recompense Trees) after completion and acceptance of each contract item as listed in bid package.

1. Inspection of plants will be made by the Engineer at completion of planting.

B. Replace, in accordance with the drawings and specifications, all plants that are dead or, as determined by the Engineer, are in an unhealthy or unsightly condition, and have lost their natural shape due to dead branches, or other causes due to the Contractor's negligence. The cost of

such replacement(s) is at Contractor's expense. Warrant all replacement plants for 1 year after installation. Trees that are used for RECOMPENSE CREDIT shall be warranted for two (2) years as required under Section

158-108. Maintenance of Trees under the City of Atlanta Tree Protection Ordinance.

C. Warranty shall not include damage or loss of trees, plants, or ground covers caused by fires, floods, freezing rains, lightning storms, or winds over 75 miles per hour, winter kill caused by extreme cold and severe winter conditions not typical of planting area; acts of vandalism or negligence on the part of the Owner.

D. Remove and immediately replace all plants, as determined by the Engineer to be unsatisfactory during the initial planting installation.

END OF SECTION

(This page is intentionally blank)

SECTION 02910

TREES, PLANTS AND GROUND COVERS

PART 1 GENERAL

1.01 SCOPE

A. The Contractor shall furnish and plant trees, plants and ground covers as shown on the Drawings and as specified herein.

B. Under this section, the Contractor shall also replace trees, plants and ground covers damaged by his operations. Existing trees, plants and ground covers damaged by the Contractor's operations shall be replaced as directed by the Engineer, to the satisfaction of the Engineer and at no additional cost to the Owner.

C. Work under this Section shall include, but not be limited to:

1. Soil preparation.
2. Planting mixes.
3. Mulch and planting accessories.
4. Furnishing and installing trees, plants and ground covers.
5. Existing tree care.
6. Filling around trees to remain.
7. Maintenance.

1.02 QUALITY ASSURANCE

A. Comply with requirements of Section 02000, Site Work

B. Plant names shall comply with "Standardized Plant Names" as adopted by the latest edition of the American Joint Committee of Horticultural Nomenclature. Names of varieties shall conform generally with names accepted by the nursery trade. Provide stock true to botanical name and legibly tagged.

C. Comply with sizing and grading standards of the latest edition of "American Standard for Nursery Stock". A plant shall be dimensioned as it stands in its

natural position.

D. All plants shall be nursery grown under climatic conditions similar to those in the locality of the project.

E. Stock furnished shall be at least the minimum size as stock to be replaced. Larger stock is acceptable, at no additional cost, and providing that the larger plants will not be cut back to the existing plant size.

F. Provide "specimen" plants with height, shape and character of growth. Tag specimen trees or shrubs at the source of supply. The Engineer will inspect specimen selections at the source of supply for suitability and adaptability to selected location. When specimen plants cannot be purchased locally, provide sufficient photographs of the proposed specimen plants for approval.

G. Plants may be inspected and approved at the place of growth, for compliance with specification requirements for quality, size, and variety. Such approval shall not impair the right of inspection and rejection upon delivery at the site or during the progress of the work.

H. Contractor shall provide and pay for material testing. Testing agency shall be acceptable to the Engineer. Provide the following data:

1. Test representative material samples proposed for use.

2. Topsoil:

   a. pH factor.
   b. Mechanical analysis.
   c. Percentage of organic content.
   d. Recommendations on type and quantity of additives required to establish satisfactory pH factor and supply of nutrients to bring nutrients to satisfactory level for planting.

3. Peat Moss:

   a. Loss of weight by ignition.
   b. Moisture absorption capacity.

1.03 SUBMITTALS

A. Submittals shall be made in accordance with the requirements of the General Conditions of the Contract Documents. In addition, the following specific information shall be provided:

1. Mulch samples.

2. Planting accessories samples.

3. Certification for topsoil source and pH value; peat moss and plant fertilizer.

4. Material test reports.

5. Upon plant material acceptance, submit written instructions recommending procedures for maintenance of plant materials.

1.04 DELIVERY, STORAGE AND HANDLING

A. Deliver fertilizer materials in original, unopened, and undamaged containers showing weight, analysis, and name of manufacturer. Store materials in a manner to prevent wetting and deterioration.

B. Take all precautions customary in good trade practice in preparing plants for moving. Workmanship that fails to meet the highest standards will be rejected. Spray deciduous plants in foliage with an approved "Anti-Desiccant" immediately after digging to prevent dehydration. Dig, pack, transport, and handle plants with care to ensure protection against injury. Inspection certificates required by law shall accompany each shipment invoice or order to stock and on arrival, the certificate shall be submitted to the Engineer.

C. Protect all plants from drying out. If plants cannot be planted immediately upon delivery, properly protect them with soil, wet peat moss, or in a manner acceptable to the Engineer. Water heeled-in plantings daily. No plant shall be bound with rope or wire in a manner that could damage or break the branches.

D. Cover plants transported on open vehicles with a protective covering to prevent wind burn.

E. Provide dry, loose topsoil for planting bed mixes. Frozen or muddy topsoil is not acceptable.

1.05 PROJECT CONDITIONS

A. Notify Engineer at least 7 working days prior to installation of plant material.

B. Protect existing utilities, paving, and other facilities from damage caused by landscaping operations.

C. Locate and protect existing irrigation system(s) during planting operations. Repair irrigation system components, damaged during planting operations, at Contractor's expense.

1.06 WARRANTY

A. Warrant plant material to remain alive and be in healthy condition for a period of 1 year after planting and acceptance. Inspection of plants will be made by the Engineer at completion of planting.

B. Replace, in accordance with these specifications, all plants that are dead or, as determined by the Engineer, are in an unhealthy or unsightly condition, and have lost their natural shape due to dead branches, or other causes due to the Contractor's negligence. The cost of such replacement is at Contractor's expense. Warrant all replacement plants for 1 year after installation.

C. Warranty shall not include damage or loss of trees, plants, or ground covers caused by fires, floods, freezing rains, lightning storms, or winds over 75 miles per hour, winter kill caused by extreme cold and severe winter conditions not typical of planting area; acts of vandalism or negligence on the part of the Owner.

D. Remove and immediately replace all plants, as determined by the Engineer to be unsatisfactory during the initial planting installation.

PART 2 PRODUCTS

2.01 MATERIALS

A. Plants: Provide plants typical of their species or variety; with normal, densely-developed branches and vigorous, fibrous root systems. Provide only sound, healthy, vigorous plants free from defects, disfiguring knots, sunscald injuries, frost cracks, abrasions of the bark, plant diseases, insect eggs, borers, and all forms of infestation. All plants shall have a fully developed form without voids and open spaces. Plants held in storage will be rejected if they show signs of growth during storage.

1. Dig balled and burlapped plants with firm, natural balls of earth of sufficient diameter and depth to encompass the fibrous and feeding root system necessary for full recovery of the plant. Provide ball sizes complying with the latest edition of the "American Standard for Nursery Stock". Cracked or mushroomed balls are not acceptable.

2. Container-grown stock: Grown in a container for sufficient length of time for the root system to have developed to hold its soil together, firm and whole.

   a. No plants shall be loose in the container.

b. Container stock shall not be pot bound.

3. Provide new tree species to match existing tree species. New species shall be provided with a single main trunk. Trees that have the main trunk forming a "Y" shape are not acceptable.

4. Plants planted in rows shall be matched in form.

5. Plants larger than those existing may be used when acceptable to the Engineer. If the use of larger plants is acceptable, increase the spread of roots or root ball in proportion to the size of the plant.

6. No pruning wounds shall be present with a diameter of more than 1-inch and such wounds must show vigorous bark on all edges.

7. Shrubs and small plants shall meet the requirements for spread as follows:

   a. The measurements for height shall be taken from the ground level to the height of the top of the plant and not the longest branch.
   b. Single stemmed or thin plants will not be accepted.
   c. Side branches shall be generous, well-twigged, and the plant as a whole well-bushed to the ground.
   d. Plants shall be in a moist, vigorous condition, free from dead wood, bruises, or other root or branch injuries.

2.02 ACCESSORIES

A. Topsoil for Planting Beds and Tree Pits: Fertile, friable, natural topsoil of loamy character, without admixture of subsoil material, obtained from a well-drained arable site, reasonably free from clay, lumps, coarse sands, stones, plants, roots, sticks, and other foreign materials, with acidity range of between pH 6.0 and 6.8.

1. Topsoil that has been stripped and stockpiled on site shall be the topsoil to be utilized on this project. Provide additional topsoil if necessary.

2. Provide topsoil free of substances harmful to the plants which will be grown in the soil. Provide 12-inches of topsoil in all plant beds and tree pits.

3. Planting mixture shall be composed of four (4) parts topsoil, two (2) parts peat moss, one (1) part sand and one (1) part well rotted manure, mixed together thoroughly, and worked into existing soil.

B. Peat Moss: Brown to black in color, weed and seed free granulated raw peat or baled peat, containing not more than 9% mineral on a dry basis. Provide ASTM D2607 sphagnum peat moss with a pH below 6.0 for ericaceous plants.

C. Fertilizer:

1. Plant Fertilizer Type "A": Commercial type approved by the Engineer, containing 5% nitrogen, 10% phosphoric acid, and 5% potash by weight. 1/4 of nitrogen in the form of nitrates, 1/4 in form of ammonia salt, and 1/2 in form of organic nitrogen.

2. Plant Fertilizer Type "B": Approved acid-base fertilizer.

D. Anti-Desiccant: Protective film emulsion providing a protective film over plant surfaces; permeable to permit transpiration. Mixed and applied in accordance with manufacturer's instructions.

E. Premium grade shredded pine bark ¾-inch to 1-1/2-inch diameter. Furnish in 3 cubic. feet bags or bulk.

F. Water: Free of substances harmful to plant growth. Hoses or other methods of transportation shall be furnished by the Contractor.

G. Stakes for Staking: Hardwood, 2-inch x 2-inch x 8-feet long.

H. Stakes for Guying: Hardwood, 2-inch x 2-inch x 36-inches long.

I. Guying/Staking/Wire: No. 10 or 12, gage galvanized wire.

1. For large trees (4-inch caliper and greater) use turnbuckles and heavier gage wire as indicated below

a. Stakes for Staking: Hardwood, 4-inches x 4-inches x 8-feet long.
b. Guying/Staking/Wire: No. 6 or 8 gage galvanized wire.

2. Turnbuckles: Galvanized steel of size and gage required to provide tensile strength equal to that of the wire. Turnbuckle openings shall be at least 3-inches.

J. Staking and Guying Hose: Two ply, reinforced garden hose not less than ½-inch inside diameter.

K. Tree Wrap: Standard waterproofed tree wrapping paper, 2-1/2-inches wide, made of 2 layers of crepe kraft paper weighing not less than 30 lbs. per

ream, cemented together with asphalt. Tree wrap shall be removed at 12 months after installation of plant material.

L. Twine: Two-ply jute material.

M. Soil Separator: Rot resistant polypropylene filter fabric, water permeable, and unaffected by freezing and thawing.

N. Drainage Tile: ASTM F405 corrugated polyethylene drainage tubing, perforated.

O. Drainage Fill: AASHTO M43 #6 (3/8-inch to ¾-inch) clean uniformly graded stone or gravel.

PART 3 EXECUTION

3.01 INSPECTION

A. Examine proposed planting areas and conditions of installation. Do not start planting work until unsatisfactory conditions are corrected.

3.02 CARE OF TREES TO REMAIN

A. Minor fills of 6-inches or less: Fill with topsoil; hand grade to required finish grade elevation.

B. Moderate fills of 12-inches or less: Place layer of ¾-inch to 1-1/2-inch stone or gravel on grade. Provide aggregate depth 1/2 of fill height, minimum of 3-inches. Cover drainage fill with polypropylene filter fabric or 1" thickness straw choke. Fill remaining depth with loose topsoil; hand grade to required finish grade elevations.

C. Deep fills over 12-inches: Place layer of ¾-inch to 1-1/2-inch stone or gravel on grade. Extend drainage fill to within 2-inch of required finish grade. Cover drainage fill with polypropylene filter fabric or 1-inch thickness straw choke. Fill remaining depth with loose topsoil; hand grade to required finish grade elevation. Provide tile drainage system and vents as indicated.

D. Deep fills over 18-inches: Place 4-inch depth of 1-inch to 2-inches stone or gravel fill on grade, extending three (3) feet beyond the outer branch drip line around tree branch perimeter. Cover drainage fill with polypropylene filter fabric or 1-inch thickness straw choke. Place 1-inch to 2-inches stone or gravel fill around tree trunk, extending to within 2-inches of required finish grade elevation. Fill remaining depth with loose topsoil; hand grade to required finish grade elevation. Do not place earth fill in contact with tree trunk, maintain 18-inches diameter of drainage fill exposed at finish grade.

3.03 PREPARATION

A. Time of Planting:

1. Evergreen material: Plant evergreen materials between September 1 and November 1 or in spring before new growth begins. If project requirements require planting at other times, plants shall be sprayed with anti-desiccant prior to planting operations.

2. Deciduous material: Plant deciduous materials in a dormant condition. If deciduous trees are planted in-leaf, they shall be sprayed with an anti-desiccant prior to planting operation.

3. Planting times other than those indicated shall be acceptable to the Engineer.

B. Planting shall be performed only by experienced workmen familiar with planting procedures under the supervision of a qualified supervisor.

C. Locate plants as indicated or as approved in the field after staking by the Contractor. If obstructions are encountered that are not shown on the drawings, do not proceed with planting operations until alternate plant locations have been selected.

D. Excavate circular plant pits with vertical sides, except for plants specifically indicated to be planted in beds. Provide shrub pits at least 12-inches greater than the diameter of the root system and 24-inches greater for trees. Depth of pit shall accommodate the root system. Provide undisturbed tamped down topsoil to hold root ball at nursery grade as shown on the drawings. Remove excavated materials from the site.

E. Provide pre-mixed planting mixture for use around the balls and roots of the plants consisting of planting topsoil and 1/2 lb. plant fertilizer Type "A" for each cu. yd. of mixture.

F. Provide pre-mixed ground cover bed planting mixture consisting of 3 parts planting topsoil to 1 part peat moss and 1/2 lb. plant fertilizer Type "A" per cu. yd. Provide beds a minimum of 12-inches deep. If slopes are greater than 4 to 1 increase depth to 18-inches.

G. Provide pre-mixed planting mixture for use around the balls and roots of ericaceous plants consisting of 2 part planting topsoil to 1 part sphagnum peat moss and 1/2 lb. plant fertilizer Type "B" per cu. yd. of mixture.

3.04 INSTALLATION

A. Set plant material in the planting pit to proper grade and alignment. Set plants upright, plumb, and faced to give the best appearance or relationship to each other or adjacent structure. Set plant material 2-inches to 3-inches above the finish grade. No filling will be permitted around trunks or stems. Backfill the pit with planting mixture. Do not use frozen or muddy mixtures for backfilling. Form a ring of soil around the edge of each planting pit to retain water.

B. After balled and burlapped plants are set, muddle planting soil mixture around bases of balls and fill all voids. Remove all burlap, ropes, and wires from the tops of balls of trees and remove entirely from all other plant material.

C. Space ground cover plants in accordance with indicated dimensions. Adjust spacing as necessary to evenly fill planting bed with indicated quantity of plants. Plant to within 12-inches of the trunks of trees and shrubs within planting bed and to within 6-inches of edge of bed.

D. Drain tile: The Contractor shall provide drainage tiles if he encounters standing water in planting pits or conditions warrant. Install drainage tile with perforations down and closed joints, firmly bedded in minimum 4-inch layer of granular fill material. Provide full bearing for each pipe section. Provide continuous slope in the direction of flow.

1. Provide collars and couplings for all in-line joints and elbows for all corners and changes in direction.

2. Provide unperforated run out pipe. Extend drainage tile to out fall indicated and make connection.

3. Obtain required inspections and perform testing before backfilling. Remove obstructions, replace damaged components, and retest system as required. Provide a satisfactory free flowing drainage tile system.

4. Place drainage fill over drain piping after satisfactory testing and acceptance. Compact drainage fill layers not exceeding 6" in loose depth. Exercise care to avoid damage or displacement of installed piping.

   a. Completely cover drain lines to width of at least 6-inches each side of pipe and above top of pipe to within 18-inches of finish grade.
   b. Provide soil separator over drainage fill prior to topsoil fill. Overlap a minimum of 6-inches.

5. Install topsoil fill over compacted drainage fill. Compact topsoil fill in

layers not exceeding 6-inches in loose depth. Extend topsoil fill to indicated finish or existing grade elevations.

E. Mulching:

1. Mulch tree and shrub planting pits and shrub beds with required mulching material 3-inches deep immediately after planting. Thoroughly water mulched areas. After watering, rake mulch to provide a uniform finished surface.

2. Mulch ground cover beds with mulch 2-inches deep immediately after planting.

F. Wrapping, Guying and Staking:

1. Inspect trees for injury to trunks, evidence of insect infestation, and improper pruning before wrapping.

2. Wrap trunks of all trees spirally from bottom to top with specified tree wrap and secure in place.

   a. Overlap 1/2 the width of the tree wrap strip and cover the trunk from the ground to the height of the second branch.

   b. Secure tree wrap in place with twine wound spirally downward in opposite direction, tied around the tree in at least 3 places in addition to the top and bottom. Wrapping and twine to be removed 12 months after installation of plant material.

3. Staking/Guying:

   a. Stake/guy all trees immediately after lawn seeding or sodding operations and prior to acceptance. When high winds or other conditions which may affect tree survival or appearance occur, the Engineer may require immediate staking/guying.
   b. Stake deciduous trees under 3-inches in caliper. Stake evergreen trees under 8-feet tall.
   c. Guy deciduous trees over 3-inches in caliper. Guy evergreen trees over 8-feet tall.

4. All work shall be acceptable to the Engineer.

G. Pruning:

1. Prune branches of deciduous stock, after planting, to balance the loss of roots and preserve the natural character appropriate to the particular

plant requirements. In general, remove 1/4 to 1/3 of the leaf bearing buds, proportion shall in all cases be acceptable to the Engineer. Remove or cut back broken, damaged, and unsymmetrical growth of new wood.

2. Multiple leader plants: Preserve the leader which will best promote the symmetry of the plant. Cut branches flush with the trunk or main branch, at a point beyond a lateral shoot or bud at a distance of not less than 1/2 the diameter of the supporting branch. Make cut on an angle.

3. Prune evergreens only to remove broken or damaged branches.

H. Care of Existing Trees:

1. Selectively prune existing trees in designated areas, under Engineer's direction. Remove sucker shoots, dead, rubbing, and damaged branching.

2. Fertilize designated existing trees with 2 to 3 lbs. of Type "A" plant fertilizer per inch of trunk diameter, for trees less than 6-inches in diameter and 3 to 5 lbs. for trees greater than 6-inches in diameter.

   a. Fertilize in early spring before growth begins or in late October.
   b. Fertilize at 2-feet to 3-feet on center in a triangular pattern to a depth of 18-inches within the dripline.
   c. Injection or drilling fertilization methods, when used, shall be acceptable subject to Engineer's approval.

3. Water existing trees every 2 weeks until acceptance. Water thoroughly with a fine mist sprinkler head soaker hose or hose at a low flow rate over the entire drip line area as required to allow water to penetrate to a depth of 12-inches to 18-inches.

I. Tree Relocation:

1. Transplant trees designated for relocation to locations shown on the drawings. Prune, dig, ball and burlap, move and plant in accordance with specified tree planting requirements.

3.05 MAINTENANCE

A. Maintain plantings until completion and acceptance of the entire project.

B. Maintenance shall include pruning, cultivating, weeding, watering, and application of appropriate insecticides and fungicides necessary to maintain plants free of insects and disease.

1. Re-set settled plants to proper grade and position. Restore planting saucer and adjacent material and remove dead material.

2. Tighten and repair guy wires and stakes as required.

3. Remove tree wrapping and twine 12 months after installation of plant material.

4. Correct defective work as soon as possible after deficiencies become apparent and weather and season permit.

5. Water trees, plants, and ground cover beds within the first 24 hours of initial planting, and not less than twice per week until final acceptance.

3.06 ACCEPTANCE

A. Inspection to determine acceptance of planted areas will be made by the Engineer, upon Contractor's request. Provide notification at least 10 working days before requested inspection date. Planted areas will be accepted provided all requirements, including maintenance, have been complied with and plant materials are alive and in a healthy, vigorous condition.

B. Upon acceptance, the Owner will assume plant maintenance.

3.07 CLEANING

A. Perform cleaning during installation of the work and upon completion of the work. Remove from site all excess materials, soils, debris, and equipment. Repair damage resulting from planting operations.

+ + + END OF SECTION 02910 + + +

SECTION 02920

Site Restoration

PART 1 GENERAL

1. 1.01 SCOPE

A. The Contractor shall provide all, labor, materials, equipment and incidentals required for all site restoration and related operations necessary shown on the Drawings or specified in these Specifications.

B. This section includes disposition of materials and structures encountered in the Work, all cleanup and any other similar, incidental, or appurtenant operations which may be necessary to properly complete the Work.

1.02 SUBMITTALS

A. Submittals shall be made in accordance with the requirements of the General Conditions of the Contract Documents. In addition, the following specific information shall be provided:

1. The Contractor shall submit certificates of inspection as required by government authorities. The Contractor shall submit other data substantiating that materials comply with specified requirements.

2. The Contractor shall submit instructions recommending procedures to be established by the City for maintenance of site restoration work for one (1) full year.

1.03 QUALITY ASSURANCE

A. The Contractor shall ship site restoration materials with certificates of inspection required by authorities having jurisdiction. The Contractor shall comply with regulations applicable to site restoration materials.

B. If specified site restoration materials are not obtainable, the Contractor shall submit proof of non-availability to the Engineer together with proposal for use of equivalent material.

1.04 SAFETY REQUIREMENTS

A. Hazards Control:

1. The Contractor shall store volatile wastes in covered metal containers, and

remove from the site of the Work daily.

2. The Contractor shall prevent accumulation of wastes that create hazardous conditions.

3. The Contractor shall provide adequate ventilation during use of volatile or noxious substances.

B. The Contractor shall conduct cleaning and disposal operations in compliance with local ordinances and environmental laws and regulations.

1. The Contractor shall not burn or bury rubbish and waste materials on the site of the Work without prior written permission from the Engineer.

2. The Contractor shall not dispose of volatile wastes such as mineral spirits, oil, or fuel in open drainage ditches or storm or sanitary drains.

1.05 DELIVERY

A. The Contractor shall deliver packaged materials in containers showing weight, analysis, and name of manufacturer. The Contractor shall protect materials from deterioration during delivery and while stored at the site of the Work.

PART 2 PRODUCTS

(NOT USED)

PART 3 EXECUTION

3.01 DISPOSITION OF MATERIALS AND STRUCTURES ENCOUNTERED IN THE WORK

A. Existing materials or structures that may be encountered (within the lines, grades, or trenching sections established for completion of the Work), if unsuitable or unacceptable to the Engineer for use in the Work, and for which the disposition is not otherwise specified, shall either be disposed of by the Contractor or shall remain the property of the City as further provided in this section.

B. At the option of the City, any existing materials or structures of "value" encountered in the Work shall remain the property of the City. The term "value" shall be defined by the City.

C. Any existing materials or structures encountered in the Work, and determined not to be of "value" by the City, shall be disposed of by the Contractor, in an approved manner.

3.02 JOB CONDITIONS

A. The Contractor shall determine the locations of underground utilities and perform Work in a manner which will avoid possible damage. The Contractor shall hand excavate, as required. The Contractor shall maintain grade stakes set by others until removal is mutually agreed upon by parties concerned.

B. All bare earth areas within the limit of work shall be grassed, mulched, or covered with other plant material as shown on the Drawings.

C. On a continuous basis, the Contractor shall maintain the site of the Work free from accumulations of waste, debris, and rubbish caused by his operations.

D. At completion of the Work, the Contractor shall remove waste materials, rubbish, tools, equipment, machinery, and surplus materials, and clean all sight-exposed surfaces. The Contractor shall leave the site of the Work clean and ready for occupancy or use.

E. The Contractor shall proceed with the complete site restoration work as rapidly as portions of the site of the Work become available, working within seasonal limitations for each kind of site restoration work required. The Contractor will not be allowed to postpone cleanup and seeding or sodding until the end of the Work.

F. When conditions detrimental to plant growth are encountered, such as rubble fill, adverse drainage conditions, or obstructions, the Contractor shall notify the Engineer before planting.

G. The Contractor shall install materials during normal planting seasons for each type of site restoration work.

H. The Contractor shall plant or replace trees and shrubs after final grades are established and prior to planting of lawns, unless otherwise acceptable to the Engineer. If planting of trees and shrubs occurs after lawn work, the Contractor shall protect lawn areas and promptly repair damage to lawns resulting from planting operations. Refer to Section 02900, Trees, Plants and Ground Covers.

I. The Contractor may, at his option, employ additional measures (other than those specified) to prevent loss of, or damage to the Work resulting from the effects of wind and/or water. No additional compensation will be made for the employment of such additional measures.

3.03 CLEANUP

A. During site restoration work, the Contractor shall keep pavements clean and the site of the Work in an orderly condition.

B. The Contractor shall protect site restoration work and materials from damage due to site restoration operations, operations by other contractors, and trades and trespassers. The Contractor shall maintain protection during installation and maintenance periods. The Contractor shall treat, repair, or replace damaged site restoration work as directed by the Engineer.

C. Immediately upon completion of any section of the Work and before payment therefore has been made, the Contractor shall remove from the site of the Work all construction equipment, temporary structures, and debris, and shall restore the site of the Work to a condition equal to or better than that which existed prior to construction. Waste materials shall be disposed of at locations satisfactory to the City or affected regulatory agencies.

D. The Contractor shall not remove barricades and warning and direction signs until directed by the Engineer.

E. After completion of all Work required by the Contract and before final payment has been made, the Contractor shall make a final cleanup of each separate part of the Work; shall restore all surfaces to a neat and orderly condition; and shall remove all construction equipment, tools, and supplies.

3.04 INSPECTION AND ACCEPTANCE

A. When site restoration work is completed, including maintenance, the Engineer will, upon request, make an inspection to determine acceptability.

B. Where inspected site restoration work does not comply with the requirements of the Engineer, the Contractor shall replace rejected work and continue specified maintenance until reinspected by the Engineer and found to be acceptable. The Contractor shall remove rejected plants and materials promptly from the site of the Work.

+ + + END OF SECTION 02920 + + +

SECTION 02933
SEEDING AND SODDING

PART 1 GENERAL

1.01 SCOPE

A. The work covered by this Section consists of furnishing all labor, equipment and material required to place topsoil, seed, commercial fertilizer, agricultural limestone and mulch material, including seedbed preparation, harrowing, compacting and other placement operations on graded earthen areas as described herein and/or shown on the Drawings.

B. Seeding operations shall be conducted on all newly graded earthen areas not covered by structures, pavement or sidewalks; all cleared or grubbed areas which are to remain as finish grade surfaces; and on all existing turf areas which are disturbed by construction operations and which are to remain as finish grade surfaces. Areas disturbed by borrow activities shall also be seeded according to these Specifications.

C. The Work shall also include temporary seeding operations to stabilize earthen surfaces during construction or inclement weather and to minimize stream siltation and erosion. Temporary seeding shall be performed at the times and locations as directed by the Engineer.

1.02 SUBMITTALS

A. Submittals shall be made in accordance with the requirements of the General Conditions of the Contract Documents. In addition, the following information shall be submitted:

1. Prior to seeding operations, labels or certified laboratory reports from an accredited commercial seed laboratory or a state seed laboratory showing the analysis and germination of the seed to be furnished. Acceptance of the seed test reports shall not relieve the Contractor of any responsibility or liability for furnishing seed meeting the requirements of this Section.

2. Prior to topsoil operations, the Contractor shall obtain representative samples and furnish soil test certificates including textural, pH, and organic ignition analysis from the State University Agricultural Extension Services or other certified testing laboratory.

PART 2 PRODUCTS

2.01 ACCEPTABLE MANUFACTURERS

A. Wood cellulose fiber mulch shall be manufactured by Weyerhauser Company or Conway Corporation.

2.02 MATERIALS AND CONSTRUCTION

A. Topsoil

1. Utilizing designated stockpiles or borrow areas on site, the Contractor shall place a minimum of 6-inches of topsoil over all graded earthen areas and over any other areas to be seeded. Sources of topsoil shall be approved by the Engineer prior to disturbance.

2. Topsoil shall be a friable loam containing a large amount of humus and shall be original surface soil of good, rich, uniform quality, free from any material such as hard clods, stiff clay, hardpan, partially disintegrated stone, pebbles larger than 1/2-inch in diameter, lime, cement, bricks, ashes, cinders, slag, concrete, bitumen or its residue, boards, sticks, chips or other undesirable material harmful or unnecessary to plant growth. Topsoil shall be reasonably free from perennial weeds and shall not contain objectionable plant material, toxic amounts of either acid or alkaline elements or vegetable debris undesirable or harmful to plant life.

3. Topsoil shall be natural topsoil without admixture of subsoil material, and shall be classifiable as loam, silt loam, clay loam, sandy loam or a combination thereof. The pH shall range from 5.5 to 7.0. Topsoil shall contain not less than 5 percent nor more than 20 percent, by weight, or organic matter as determined by loss on ignition of oven dried samples to 65 Degrees C.

B. Seed

1. Seed shall be hulled common Bermuda (Cynodon Dactylon) guaranteed by the dealer to be 98% minimum purity and 90% minimum germination and certified free of giant strain Bermuda.

2. Seed shall be delivered in new bags or bags that are sound and labeled in accordance with the U.S. Department of Agriculture Federal Seed Act.

3. All seed shall be from the last crop available at time of purchase and shall not be moldy, wet or otherwise damaged in transit or storage.

4. Seed shall bear the growers analysis testing to 98 percent for purity and 90 percent for germination. At the discretion of the Engineer, samples of seed may be taken for check against the grower’s analysis.

5. Species, rate of seeding, fertilization and other requirements are shown in

Table 02933-1 at the end of this Section.

C. Fertilizer and Liming Materials

1. Fertilizer and liming materials shall comply with applicable state, local and federal laws concerned with their production and use.

2. Commercial fertilizer shall be a ready mixed material and shall be equivalent to the grade or grades specified in Table 02933-1. Container bags shall have the name and address of the manufacturer, the brand name, net weight and chemical composition.

3. Agricultural limestone shall be a pulverized limestone having a calcium carbonate content of not less than 85 percent by weight.

4. Fertilizer shall be a complete fertilizer, the content of which shall meet the following minimum requirements: 10% nitrogen, 10% phosphoric acid, 10% potash, available materials. Fertilizer shall be uniform in composition, dry and free flowing, and shall be delivered to the site in original unopened containers bearing the manufacturer's statement of guarantee.

5. Ammonium Nitrate shall be a standard brand and shall be delivered to the site in original unopened containers. It shall contain not less than 33-1/3% Nitrogen.

D. Mulch Material

1. All mulch materials shall be air dried and reasonably free of noxious weeds and weed seeds or other materials detrimental to plant growth.

2. Mulch shall be composed of wood cellulose fiber, straw or stalks, as specified herein. Mulch shall be suitable for spreading with standard mulch blowing equipment.

3. Straw mulch shall be partially decomposed stalks of wheat, rye, oats or other approved grain crops.

4. Stalks shall be the partially decomposed, shredded residue of corn, cane, sorghum or other approved standing field crops.

E. Mulch Binder

1. Mulch on slopes exceeding 3 to 1 ratio shall be held in place by the use of an approved mulch binder. The mulch binder shall be non-toxic to plant life and shall be acceptable to the Engineer.

2. Emulsified asphalt binder shall be Grade SS-1, ASTM D977. Cutback

asphalt binder shall be Grade RC 70 or RC 250.

F. Inoculants for Legumes: All leguminous seed shall be inoculated prior to seeding with a standard culture of nitrogen fixing bacteria that is adapted to the particular seed involved.

G. Water: Water shall be clean, clear water free from any objectionable or harmful chemical qualities or organisms and shall be furnished by the Contractor.

H. Sod

1. Sod shall be living, growing sod of Bermuda hybrids "Tifway 419" or Tifgreen 328". This includes sod which is dormant during the cold or dry season and capable of renewing growth after the dormant period. All sod shall be obtained from approved sources. The presence of weeds or other noxious growth or any other foreign material which may be detrimental to the proposed planting will be cause of rejection. At least 85% of the plants in the sod shall be composed of the designated variety of Bermuda grass.

2. The Engineer shall be notified of sources before it is harvested. Approval of such sources shall not be construed as an acceptance of the material. The sod will be subject to inspection while it is being planted and any material which has been permitted to dry out excessively or exposed to extreme heat, or which is not viable, will be rejected.

3. In the harvesting of the sod, grass more than 3-inches tall shall be mowed to a height of 3-inches, raked and removed before sod cutting begins. The sod shall be cut into square or rectangular sections which may vary in length, but which shall be of uniform width and thickness, and shall have at least ½-inch of soil adhering firmly to the roots. Care shall be exercised at all times to retain the soil on the roots of the sod during the process of cutting, transporting and planting. Sod shall be transplanted within 24 hours from the time it is harvested. All sod stored shall be kept moist, shall be protected from exposure to the air and sun and from freezing, and shall not be stored for more than 10 days. Sod shall be cut and moved only when the soil moisture conditions are such that favorable results can be expected.

PART 3 EXECUTION

3.01 SECURING AND PLACING TOPSOIL

A. Topsoil shall be secured from areas from which topsoil has not been previously removed, either by erosion or mechanical methods. Topsoil shall not be removed to a depth in excess of the depth approved by the Engineer.

B. The area or areas from which topsoil is secured shall possess such uniformity of soil depth, color, texture, drainage and other characteristics as to offer assurance that, when removed the product will be homogeneous in nature and will conform to the requirements of these Specifications.

C. All areas from which topsoil is to be secured, shall be cleaned of all sticks, boards, stones, lime, cement, ashes, cinders, slag, concrete, bitumen or its residue and any other refuse which will hinder or prevent growth.

D. In securing topsoil from a designated pit, or elsewhere, should strata or seams of material occur which do not come under the requirements for topsoil, such material shall be removed from the topsoil or if required by the Engineer, the pit shall be abandoned.

E. Before placing or depositing topsoil upon any areas, all improvement within the area shall be completed, unless otherwise approved by the Engineer.

F. The areas in which topsoil is to be placed or incorporated shall be prepared before securing topsoil for use.

3.02 SEEDBED PREPARATION

A. Before liming, fertilizing and seeding, the topsoil surfaces shall be trimmed and worked to true line from unsightly variation, bumps, ridges and depressions and all detrimental material, roots and stones larger than 3-inches in any dimension shall be removed from the soil.

B. Not earlier than 24 hours before the seed is to be sown, the soil surface to be seeded shall be thoroughly cultivated to a depth of not less than 2-inches with a weighted disc, tiller, pulvimixer or other equipment, until the surface is smooth and in a condition acceptable to the Engineer.

C. If the prepared surface becomes eroded as a result of rain or for any other reason, or becomes crusted before the seed is sown, the surface shall again be cultivated for seeding.

D. Ground preparation operations shall be performed only when the ground is in a tillable and workable condition, as determined by the Engineer.

3.03 FERTILIZATION AND LIMING

A. Following seedbed preparation, fertilizer shall be applied to all areas to be seeded so as to achieve the application rates shown in Table 02933-1 at the end of this Section.

B. Fertilizer shall be spread evenly over the seedbed and shall be lightly harrowed, raked, or otherwise incorporated into the soil for a depth of 1/2-inch.

C. Fertilizer need not be incorporated in the soil as specified above when mixed with seed in water and applied with power sprayer equipment. The seed shall not remain in water containing fertilizer for more than 30 minutes when a hydraulic seeder is used.

D. Agricultural limestone shall be thoroughly mixed into the soil according to the rates in Table 02933-1. The specified rate of application of limestone may be reduced by the Engineer if pH tests indicate this to be desirable. It is the responsibility of the Contractor to obtain such tests and submit the results to the Engineer for adjustment in rates.

E. It is the responsibility of the Contractor to make one application of a maintenance fertilizer according to the recommendations listed in Table 02933-1.

F. On the approved grade, spread 20 lbs. per 1,000 sq. ft. of 10-10-10 fertilizer into top 3-inches, hand rake and smooth. The surface shall be brought to finish grade requirements, allowance being made for settlement. Finish grades shall be smooth and free from hollows or other inequalities.

G. Three weeks after construction of lawns add ammonium nitrate at the rate of 5 lbs. per 1000 sq. ft. of lawn area, and thoroughly water in.

3.04 SEEDING

A. Seed of the specified group shall be sown as soon as preparation of the seedbed has been completed. No seed shall be sown during high winds, nor until the surface is suitable for working and is in a proper condition. Seeding shall be performed during the dates shown in Table 02933-1 unless otherwise approved by the Engineer. Seed mixtures may be sown together provided they are kept in a thoroughly mixed condition during the seeding operation.

B. Seed shall be uniformly sown by any approved mechanical method suitable for the slope and size of the areas to be seeded, preferably with a broadcast type seeder, windmill hand seeder or approved mechanical power drawn seed drills. Hydro-seeding and hydro-mulching may be used on steep embankments, provided full coverage is obtained. Care shall be taken to adjust the seeder for seedings at the proper rate before seeding operations are started and to maintain their adjustment during seeding. Seed in hoppers shall be agitated to prevent segregation of the various seeds in a seeding mixture.

C. Immediately after sowing, the seeds shall be covered and compacted to a depth of 1/8 to 3/8-inch by a cultipacker or suitable roller.

D. Leguminous seeds shall be inoculated prior to seeding with an approved and compatible nitrogen-fixing inoculant in accordance with the manufacturer's mixing instructions.

E. Italian rye grass (Lolium Multiflorum) shall be evenly seeded with a mechanical spreader at the rate of 5 lbs. per 1000 sq. ft. of area, lightly rake, suitably compact and thoroughly water. Before planting the permanent lawn, the rye shall be thoroughly scarified in a manner to incorporate it into the top three inches of the ground.

F. The planting of bermuda grass shall be done only within the season extending from April 15 to August 1.

3.05 MULCHING

A. All seeded areas shall be uniformly mulched in a continuous blanket immediately after seeding. The mulch shall be applied so as to permit some sunlight to penetrate and the air to circulate and at the same time shade the ground, reduce erosion and conserve soil moisture. Approximately 25 percent of the ground shall be visible through the mulch blanket.

B. One of the following mulches shall be spread evenly over the seeded areas at the following application rates:

Wood Cellulose Fiber	1,400 pounds/acre
Straw	4,000 pounds/acre
Stalks	4,000 pounds/acre

C. These rates may be adjusted at the discretion of the Engineer at no additional cost to the Owner, depending on the texture and condition of the mulch material and the characteristics of the seeded area.

D. The Contractor shall cover structures, poles, fence and appurtenances if the mulch binder is applied in such a way that it would come in contact with or discolor the structures.

E. Mulch and binder shall be applied by suitable blowing equipment at closely controlled application rates in a manner acceptable to the Engineer.

3.06 WATERING

A. The Contractor shall be responsible for maintaining the proper moisture

content of the soil to insure adequate plant growth until a satisfactory stand is obtained. If necessary, watering shall be performed to maintain adequate water content in the soil.

B. Watering shall be accomplished by hoses, tank truck or sprinklers in such a way to prevent erosion, excessive runoff and overwatered spots.

3.07 MAINTENANCE

A. Upon completion of seeding operations, the Contractor shall clear the area of all equipment, debris and excess material and the premises shall be left in a neat and orderly condition.

B. The Contractor shall maintain all seeded areas without additional payment until final acceptance of the work by the Owner, and any regrading, refertilizing, reliming, reseeding or remulching shall be done at Contractor's own expense. Seeding work shall be repeated on defective areas until a satisfactory uniform stand is accomplished. Damage resulting from erosion, gulleys, washouts or other causes shall be repaired by filling with topsoil, compacting and repeating the seeding work at Contractor's expense.

C. Contractor's guarantee of one (1) year shall also cover a fully rooted stand of grass.

TABLE 02933-1

SEEDING REQUIREMENTS

Area	Sowing Season	Species	Seed	Rates per 1,000 Square Feet		
				Fertilizer	Limestone	Maintenance**
Flat to rolling terrain with slopes less than 3:1	3/1 to 4/15	Rebel II Turf-Type Tall Fescue	6-8 lbs.	30 lbs. 6-12-12	200 lbs.	10 lbs. 10-10-10
	9/1 to 11/15	Rebel II Turf-Type Tall Fescue	6-8 lbs.	30 lbs. 6-12-12	200 lbs.	15 lbs. 10-10-10
Embankments with slopes greater than 3:1	3/1 to 6/1	Crownvetch* Kentucky 31 Fescue Weeping Lovegrass	1 lb. 2 lbs. 1/4 lb.	30 lbs. 6-12-12	200 lbs.	10 lbs. 0-20-20
	8/1 to 11/1	Crownvetch* Kentucky 31 Fescue Annual Ryegrass	1 lb. 2 lb. 2 lb.	30 lbs. 6-12-12	200 lbs.	10 lbs. 0-20-20

* Requires inoculation
** Maintenance fertilizer shall be applied in early spring following initial establishment of cover

+ + + END OF SECTION 02933 + + +

SECTION 03200
CONCRETE REINFORCEMENT AND DOWELING

PART 1 GENERAL

1.01 SCOPE

A. Contractor shall furnish all labor, materials, equipment and incidentals required to provide concrete reinforcement and doweling as shown and specified.

B. The extent of concrete reinforcement and doweling is shown on the Drawings.

C. The Work includes fabrication and placement of reinforcement including bars, ties and supports for concrete and encasements.

1.02 SUBMITTALS

A. Submittals shall be made in accordance with the requirements of the General Conditions of the Contract Documents. In addition, the following specific information shall be provided:

1. Shop Drawings for fabrication, bending, and placement of concrete reinforcement. Comply with ACI 315, Chapters 1 thru 8. Show bar schedules, stirrup spacing, diagrams of bent bars, arrangements and assemblies, as required for the fabrications and placement of concrete reinforcement unless otherwise noted. Splices shall be kept to a minimum. Show construction joints.

2. Copies of manufacturer's specifications and installation instructions for all materials and reinforcement accessories.

3. Copies of steel producer's certificates of mill analysis, tensile and bend tests for reinforcing steel.

1.03 QUALITY ASSURANCE

A. The Contractor shall examine the substrate and the conditions under which concrete reinforcement is to be placed, and notify the Engineer in writing of unsatisfactory conditions. Do not proceed with the work until unsatisfactory conditions have been corrected in a manner acceptable to the Engineer.

B. Reference Standards: The Contractor shall comply with all Federal and State laws or ordinances, as well as all applicable codes, standards, regulations and/or regulatory agency requirements including the partial listing below.

1. Concrete Reinforcing Steel Institute, "Manual of Standard Practice", includes ASTM standards referred to herein.

2. ACI 315 - Manual of Standard Practice for Detailing Reinforced Concrete Structures.

3. ACI 318 - Building Code Requirements for Structural Concrete.

4. ACI 350 – Code Requirements for Environmental Engineering Concrete Structures.

5. Concrete Reinforcing Steel Institute, Placing Reinforcing Bars.

6. AWS D.1 - Structural Welding Code.

C. Minimum Concrete Cover for Reinforcement: Comply with ACI 350, except as shown on the Drawings:

D. Splices other than lap splices shall not be used except where permitted in writing by the Engineer.

E. Reinforcement which arrives on the jobsite which is not tagged as specified in Paragraph 1.04A of this Section shall be rejected by the Engineer and removed at the Contractor's expense.

1.04 DELIVERY. STORAGE AND HANDLING

A. Deliver concrete reinforcement materials to the site bundled, tagged and marked. Use metal tags indicating bar size, length, and other information corresponding to markings shown on placement diagrams.

B. Store concrete reinforcement material at the site to prevent damage and accumulation of dirt or excessive rust. Store on heavy wood blocking so that no part of it will come in contact with the ground.

PART 2 PRODUCTS

2.01 MATERIALS

A. Reinforcing Bars and Dowelling: ASTM A615, Grade 60, where welding is not required, or ASTM A706, Grade 60, for reinforcing to be welded.

B. Steel Wire: ASTM A82.

C. Welded Smooth Wire Fabric: ASTM A185: Furnish in flat sheets, not rolls.

D. Supports for Reinforcement: Bar supports coming into contact with forms shall be CRSI Class 1 plastic protected or Class 2 stainless steel protected and shall be located in accordance with CRSI MSP-1 and placed in accordance with CRSI PRB. Precast concrete block supports shall be provided for reinforcing in concrete cast against grade.

E. Mechanical Connections

1. Metal Sleeve: Steel sleeve with cast filler metal, capable of developing, under tension or compression, 125 percent of specified yield strength of the reinforcing bar. Metal sleeve shall be as manufactured by:

   a. Erico Products, Inc., Cleveland, OH.
   b. Or approved equal.

2. Mechanical Threaded Connection: Metal coupling sleeve with internal threads which engage threaded ends of bars to be spliced, and develops under tension or compression, 125 percent of the specified yield strength of the bar. Mechanical threaded connection shall be as manufactured by:

   a. Erico Products, Inc., Cleveland, OH, Lenton Reinforcing Steel Couplers.
   b. Richmond Screw Anchor Co., Inc., Fort Worth, TX, Richmond DB-SAE Dowel Bar Splicers.
   c. Or approved equal.

F. High Strength Bars: High strength bars shall be 150 KSI steel conforming to ASTM A722, threaded full length. Anchor nuts shall be manufacturer's standard designed for use with bars. Mechanical couplers, when required, shall be capable of developing 100 percent of guaranteed ultimate strength of the bars.

2.02 FABRICATION

A. General: Fabricate reinforcing bars and dowelling to conform to required shapes and dimensions, with fabrication tolerances complying with CRSI "Manual of Standard Practice" and ACI minimums. In case of fabricating errors, do not re-bend, retemper, heat, deform or straighten reinforcement.

B. Unacceptable Materials: Reinforcement with any of the defects listed below will not be permitted in the Work:

1. Bar lengths, bends, and other dimensions exceeding specified fabrication tolerances.

2. Bends or kinks not shown on approved Shop Drawings.

3. Bars with reduced cross-section due to excessive rusting or other cause.

4. Surface contamination that would affect the bond i.e. grease, dirt, paint, rust etc.

5. Heat deformed or torched bars.

PART 3 EXECUTION

3.01 INSTALLATION

A. Comply with the applicable recommendations of specified codes and standards, and CRSI "Placing Reinforcing Bars" and ACI requirements for details and methods of reinforcement placement and supports.

B. Clean reinforcement to remove loose rust and mill scale, earth, ice, and other injurious materials which reduce or destroy bond with concrete.

C. Position, support, and secure reinforcement and dowelling against displacement during formwork construction or concrete placement and grouting operations. Locate and support reinforcing by metal chairs, runners, bolsters, spacers and hangers, as required. Wood blocks shall not be allowed for rebar support.

1. Place reinforcement to obtain the minimum concrete coverages as shown and as specified in ACI 350. Arrange, space, and securely tie bars and bar supports together with 16 gauge wire to hold reinforcement accurately in position during concrete placement operations. Set wire ties so that twisted ends are directed away from exposed concrete surfaces.

2. Reinforcing steel shall not be secured to forms with wire, nails or other ferrous metal. Metal supports subject to corrosion shall not touch formed or exposed concrete surfaces.

D. Install welded wire fabric in as long lengths as practical. Lap adjoining pieces at least one full mesh and lace splices with 16 gauge wire and tie.

E. Provide sufficient numbers of supports of strength required to carry reinforcement without sagging. Do not place reinforcing bars more than 2 inches beyond the last leg of any continuous bar support. Do not use supports as bases for runways for concrete conveying equipment and similar construction loads.

F. Provide standard reinforcement splices by lapping ends, placing bars in

contact, and tying tightly with wire. Comply with requirements shown for minimum lap of spliced bars.

G. Dowels shall be embedded a minimum of 8 inches into existing concrete unless otherwise specified on the Drawings. Grout with an approved epoxy grout as specified in Section 03605, Dowelling into Existing Concrete

H. Existing concrete which is shown to remain but is removed in error or must be removed to install new Work is to be reinforced to the extent as required and approved by the Engineer. This work will be performed with no additional compensation to the Contractor.

I. Do not straighten or rebend reinforcing.

J. Reinforcement Around Openings: Place an equivalent area of steel around the pipe or openings and extend on each side sufficiently to develop bond in each bar. Refer to Details on the Drawings for bar extension length each side of openings. Where welded wire fabric is used, provide extra reinforcing using fabric or deformed bars.

K. Welded Reinforcement

1. Welding shall not be permitted unless the Contractor submits detailed shop drawings, qualifications, and radiographic nondestructive testing procedures for review by the Engineer.

2. Reinforcing bars to be welded shall conform to ASTM A706. Other bars shall not be welded. The Contractor shall obtain the Engineer's approval prior to proceeding.

3. The basis for the Contractor submittals shall be The Structural Welding Code, Reinforcing Steel, AWS D1.4-79, published by the American Welding Society and the applicable portions of ACI 318. The Contractor shall test 10 percent of all welds using radiographic, nondestructive testing procedures referenced in this code.

3.02 INSPECTION OF REINFORCEMENT

A. After the rebar, appliance, anchors and embedments have been installed and checked, the Contractor shall review all aspects of the pending concrete pour and initial those items on its pour card. Contractor shall notify the Engineer no less than 24 hours prior to the pour, so that the Engineer may check the area and pour. No concrete shall be placed until this is complete.

B. Concrete shall not be placed until the reinforcing steel is inspected and permission for placing concrete is granted by the Engineer. All concrete

placed in violation of this provision will be rejected. Rejected concrete shall be removed and replaced at no cost to the City.

+ + + END OF SECTION 03200 + + +

SECTION 03300

Concrete Work

PART 1 – GENERAL

1.01 SCOPE

A. The extent of concrete work is shown on the Drawings and indicated in the Specifications.

1.02 QUALITY ASSURANCE

A. Codes and Standards: Comply with the provisions of the following codes, specifications and standards, except as otherwise shown or specified:

1. ACI 301 "Specifications for Structural Concrete for Buildings"

2. ACI 311.4R "Guide for Concrete Inspection"

3. ACI 318 "Building Code Requirements for Reinforced Concrete"

4. ACI 347 "Recommended Practice for Concrete Formwork"

5. ACI 304 "Recommended Practice for Measuring, Mixing, Transporting and Placing Concrete"

6. Concrete Reinforcing Steel Institute, "Manual of Standard Practice"

7. Where local building code requirements exist, comply with provisions of such codes that are more stringent than the preceding codes and standards.

B. Workmanship: The Contractor is responsible for correction of concrete work that does not conform to the specified requirements, including strength, tolerances and finishes. Correct deficient concrete as approved by the Engineer.

C. Construction Tolerances:

1. Variation from Plumb: For lines and surfaces of columns, piers, walls, and arises, do not exceed l/4 inch in l0 feet nor more than one inch total; except for exposed corners, control joints and other conspicuous lines, do not exceed l/4 inch in any story or 20 foot maximum, nor l/2 inch in 40 feet or more.

2. Variation from Grade: For grades shown for slab soffits, ceilings, beam soffits, and in arises, do not exceed l/4 inch in l0 feet, 3/8 inch in any bay or 20 foot maximum, nor 3/4 inch in 40 feet or more. For exposed lintels, sills, parapets, joints and other conspicuous lines, do not exceed 1/4 inch in any bay or 20 foot maximum, or ½ inch in 40 feet or more from horizontal or grade indicated.

3. Variation from Linear Building Line: For position shown in plan and related position of columns, walls, and partitions, do not exceed ½ inch in any bay or 20 foot maximum, nor one inch in 40 feet or more.

4. Variation in Cross-Sectional Dimensions: For columns and beams and thickness of slabs and walls, do not exceed minus l/4 inch nor plus 1/2 inch.

1.03 CLASSES OF CONCRETE

A. Class “A” concrete 4,000 psi compressive strength at 28 days shall be steel reinforced and includes the following:

1. Foundations
2. Walls
3. Slab on grade
4. Beams
5. Elevated concrete floors
6. Columns

B. Class “B” concrete 3,000 psi compressive strength at 28 days shall be placed without forms or with simple forms, with little or no reinforcing, and includes the following:

1. Sidewalks
2. Curbs
3. Pavement patch
4. Thrust blocking
5. Fence post footing
6. Mud slabs
7. Fill concrete
8. Concrete encasement of pipe

1.04 FACTORY TESTING AND MIX DESIGN

A. Testing Before Construction: Employ concrete testing laboratory, acceptable to Engineer, at Contractor's expense to perform material evaluation tests and to design concrete mixes.

D. Tests for Concrete Materials:

1. Test aggregates by the methods of sampling and testing of ASTM C 33.

2. For Portland cement, sample the cement and determine the properties by the methods of test of ASTM C 150.

3. Certificates of material properties and compliance with specified requirements may be submitted in lieu of testing, when acceptable to the Engineer.

C. Proportioning and Design of Mixes:

1. Submit written mix design to the Engineer for review and approval at least 15 days prior to start of work. Do not begin concrete work until the mix design has been approved by the Engineer.

2. Prepare design mixes for each type of concrete. Use an independent testing facility acceptable to the Engineer for preparing and reporting proposed mix designs.

3. Proportion mixes by either laboratory trial batch or field experience methods, using materials to be employed on the project for each class of concrete required, complying with ACI 211.1.

4. Submit written reports to the Engineer of each proposed mix for each class of concrete at least 15 days prior to start of work. Do not begin concrete production until mixes have been reviewed by the Engineer.

D. Laboratory Trial Batches:

1. When laboratory trial batches are used to select concrete proportions, prepare test specimens in accordance with ASTM C 192 and conduct strength tests in accordance with ASTM C 39, as specified in ACI 301.

2. Establish a curve showing relationship between water-cement ratio (or cement content) and compressive strength with at least three

points representing batches that produce strengths above and below that required. Use not less than three specimens tested at 28-days, or an earlier age when acceptable to the Engineer, to establish each point on the curve.

E. Field Experience Method:

1. When field experience methods are used to select concrete proportions, establish proportions as specified in ACI 301.

2. Strength data for establishing standard deviation will be considered suitable if the concrete production facility has certified records consisting of at least thirty consecutive tests in one group or the statistical average for two groups totaling thirty or more tests, representing similar materials and projects conditions.

F. Standard Deviation:

1. If standard deviation exceeds 600 psi or if no suitable records are available, select proportions to produce an average strength of at least 1200-psi greater than the required compressive strength of concrete.

2. After sufficient experience and test data become available from the job, using ACI 214 methods of evaluation, the standard deviation may be reduced when the probable frequency of an average of three consecutive tests below required compressive strength will not exceed one in one hundred.

G. Adjustment to Concrete Mixes: Mix design adjustments may be requested by the Contractor when characteristics of materials, job conditions, weather, test results, or other circumstances warrant; at no additional cost to the City and as accepted by the Engineer. Laboratory test data for revised mix designs and strength results must be submitted to and accepted by the Engineer before using in the work.

H. Compressive Strength:

1. Design mixes for a specified strength of 3,500 psi at 28 days using a minimum of 5 1/4 bags of cement (94 pounds), and a maximum of 6 gallons of water per bag of cement, unless otherwise indicated.

2. Design mixes to provide concrete with the properties shown on the Drawings.

I. Admixtures:

1. Use air-entraining admixture in all concrete, unless otherwise shown or specified. Add air-entraining admixture at the manufacturer's prescribed rate to result in concrete at the point of placement having air content by volume within the following limits:

a. 6% to 9% for maximum aggregate 1/2 inch and under.

b. 4% to 6% for maximum aggregate over 1/2 inch through 1 1/2 inch.

c. 2.5% to 4.5% for maximum aggregate over 1 1/2 inch.

J. Slump Limits:

1. Proportion and design mixes to result in concrete slump at the point of placement as follows:

a. Ramps and Sloping Surfaces: Not more than 3 inches.

b. Reinforced Foundation Systems: Not less than 1 inch and not more than 3 inches.

c. All Other Concrete: Not less than 1 inch and not more than 4 inches.

1.05 TESTING DURING CONSTRUCTION

A. All testing of samples will be done by a testing laboratory selected by the City in accordance with Section 01410. Testing shall be paid for separately by the City directly to the testing laboratory.

B. Testing During Construction:

1. Perform one slump test (ASTM C 143) for each concrete load at point of discharge, and prepare one set of three standard compressive strength cylinders (ASTM C 31) for each 50 cubic yards or fraction thereof of concrete placed in any one day. Store compressive strength cylinders in dampened protective material.

C. The following quality control testing is required during construction:

1. Sampling Fresh Concrete: ASTM C 172, except modified for slump to comply with ASTM C94.

2. Slump: ASTM C 143; one test for each concrete load at point of discharge; and one for each set of compressive strength test specimens; additional tests when concrete consistency seems to have changed.

D. Compressive Strength:

1. ASTM C 39, one set of 6 standard cylinders (ASTM C 31) for each 50 cubic yards or fraction thereof, of each concrete class placed in any one day or for each 5,000 square feet of surface area placed; 2 specimens tested at 7 days, 3 specimens tested at 28 days, and one specimen retained in reserve for later testing if required.

2. When the total quantity of a given class of concrete is less than 50 cubic yards, or the quantity of concrete or any single structure is less than 10 cubic yards, the Engineer may waive compressive strength testing, but such action shall not relieve the Contractor from responsibility for furnishing concrete of the required strength.

3. The strength level of concrete will be considered satisfactory if the averages of all sets of three consecutive strength test results equal or exceed the specified strength and no individual strength test result falls below the specified strength by more than 500 psi.

E. Air Content: ASTM C 231, pressure method or ASTM C 173; one for each set of compressive strength test specimens.

F. Additional Tests: When test results indicate specified concrete strengths and other characteristics have not been attained, perform additional testing to determine the extent to which deficiencies exist. Where cored cylinders are utilized to determine adequacy of concrete, comply with ASTM C42.

1.06 SUBMITTALS

A. Manufacturer's Data: For information only, submit manufacturer's specifications with application and installation instructions for proprietary materials and items, including reinforcement and forming accessories, admixtures, patching compounds, waterstops, joint systems, curing compounds and others as requested by the Engineer.

B. Shop Drawings: Submit shop drawings for fabrication, bending, and placement of concrete reinforcement. Comply with the ACI Special Publication No. 66 (SP-66) "ACI Detailing Manual" showing bar schedules, stirrup spacing, diagrams of bent bars, and arrangements of concrete

reinforcement. Include special reinforcement required at openings through concrete structures.

C. Laboratory Test Reports: Submit laboratory test reports for concrete materials and mix design test as specified.

PART 2 – PRODUCTS

2.01 FORM MATERIALS

A. Forms for Exposed Finish Concrete:

1. Unless otherwise shown or specified, construct all formwork for exposed concrete surfaces with plywood, metal, metal-framed plywood-faced or other acceptable panel-type materials, to provide continuous, straight, smooth, exposed surfaces. Furnish in largest practicable sizes to minimize number of joints and to conform to joint system shown on Drawings. Provide form material with sufficient thickness to withstand pressure of newly-placed concrete without bow or deflection.

2. Where plywood is used in formwork, provide material complying with U.S. Product Standard PS-I "A-C or B-B High Density Overlaid Concrete Form", Class I, unless otherwise acceptable to Engineer.

B. Forms for Unexposed Finish Concrete: Form concrete surfaces which will be unexposed in finished structure with plywood, lumber, metal or other acceptable material. Provide lumber dressed on at least two edges and one side for tight fit.

C. Forms for Textured Finished Concrete: Form textured finish concrete surfaces with units of face design, size arrangement and configuration as shown on the Drawings. Provide solid backing and form supports to ensure stability of textured form liners.

D. Cylindrical Columns and Supports: Form all round-section members with metal, fiberglass reinforced plastic, or paper or fiber tubes. Construct paper or fiber tubes of laminated plies using water-resistant type adhesive and wax-impregnated exterior for weather and moisture protection. Provide units with sufficient wall thickness to resist loads imposed by wet concrete without deformation.

E. Curved Structures: Form round or curved surfaces to true arcs without flat planes unless otherwise indicated on the Drawings.

F. Form Coatings: Provide commercial formulation form-coating compounds that will not bond with, stain nor adversely affect concrete surfaces, and will not impair subsequent treatments of concrete surfaces.

2.02 REINFORCING MATERIALS

A. Reinforcing Bars: ASTM A 615, Grade 60 unless otherwise shown.

B. Epoxy-Coated Reinforcing Bars: ASTM A 775.

C. Steel Wire: ASTM A 82, plain, cold-drawn steel.

D. Welded Wire Fabric: ASTM A 185, welded steel wire fabric.

E. Supports for Reinforcement: Provide supports for reinforcement including bolsters, chairs, spacers and other devices for spacing, supporting and fastening reinforcing bars and welded wire fabric in place. Use wire bar type supports complying with CRSI recommendations, unless otherwise specified. Solid precast concrete block may be used for supporting footing and foundation mats against earth material. Wood, clay, brick and other non-standard devices will not be acceptable.

1. For slabs-on-grade, use supports with sand plates or horizontal runners where base materials will not support chair legs.

2. For exposed-to-view concrete surfaces, where legs of supports are in contact with forms, provide supports with legs that are plastic protected or stainless steel protected.

2.03 CONCRETE MATERIALS

A. Portland Cement:

1. ASTM C 150, Type l, unless otherwise acceptable to Engineer.

2. Use only one brand of cement throughout the project, unless otherwise acceptable to Engineer.

B. Aggregates: ASTM C 33, and as herein specified. Provide aggregates from a single source for all exposed concrete.

1. Fine Aggregate: Clean, sharp, natural sand free from loam, clay, lumps or other deleterious substances.

2. Coarse Aggregate: Clean, uncoated, crushed granite or similar hard stone processed from natural rock or stone, and containing no clay, mud, loam or foreign matter.

3. Maximum Aggregate Size: Not larger than one-fifth of the narrowest dimension between sides of forms, one-third of the depth of slabs, nor three-fourths of the minimum clear spacing between individual reinforcing bars or bundles of bars. Size limitations may be waived if, in the judgment of the Engineer, workability and methods of consolidation are such that concrete can be placed without honeycomb or voids.

4. Water: Clean, fresh, and safely drinkable by humans.

5. Air-Entraining Admixture: ASTM C 260.

2.04 RELATED MATERIALS

A. Grout: Ready mixed Portland cement, sand and water mixture conforming with materials and mix design of highest strength project-required concrete except for deletion of coarse aggregate.

B. Nonshrink Grout: Factory-premixed cementitious material containing no corrosive material, which is nonshrink from time of placement and shows no expansion after final set when tested under ASTM C 827, has an initial setting time of not less than 45 minutes, has a 24 hour compressive strength of not less than 3,000 psi under ASTM C 109 for a trowelable mix, and is selected and applied in conformance with manufacturer's recommendations.

C. Compaction Grout:

1. Compaction grouting of voids surrounding the exterior of sewers or manholes is accomplished with the constant placement of a stiff, mortar-type Portland cement based grout material at pressures not to exceed 100 psi at the pump, unless otherwise approved by the Engineer. Cement (if used) shall be Type I or Type II Portland Cement conforming to ASTM C150. Admixtures (if used) shall conform to ASTM C1017/C1017M, Standard Specification for Chemical Admixtures for Use in Producing Flowing Concrete. Grout shall either be ready-mix transported to the site, or mixed on-site. For each batch of ready-mix delivered to the site, the ready-mix plant shall issue a ticket recording the mix components, time mixed, water added, etc. The slump of the grout mix shall not exceed 3 inches.

2. The injected grout mass shall occupy the void space. The grout mass shall be injected at pressures which are requisite for the conditions encountered and shall not exceed 10 psi at the point of injection, unless otherwise approved by the Engineer. The grout volume shall expand and densify targeted soils in-place. The grout pressure produces soil compaction by displacing soil at depth until resisted by the weight of overlying soils. The grouting treatment is applied on a grid pattern, to accomplish improved compaction of displaced soils and greater uniformity of the treated soil mass.

3. Provide positive displacement pumping units with variable speed capabilities. The pumping system shall be capable of pumping the grout at pressures up to 100 psi at the pump.

4. Use steel injection pipes of sufficient diameter and wall thickness to allow grout injection to the pressure specified. Injection pipes may be installed from the interior of manholes. Otherwise, injection pipes shall be installed from the ground surface. The end of each injection pipe shall be sealed to prevent soil strata from entering the pipe during installation.

D. Waterstops (Plastic): Provide flat, dumbbell type or centerbulb type waterstops at construction joints and other joints as indicated. Size to suit joints. Use polyvinyl chloride (PVC) waterstops complying with Corps of Engineers Spec. CRD-C572.

E. Waterstops (Copper): Provide formed-sheet, annealed copper waterstops as shown.

F. Joint Sealing Compound: One component, non-sag, low modulus polyurethane or polysulfide sealant conforming to Federal Specification TT-S230C, Class A, Type II and ASTM C920, Type S, Class 25, Grade NS.

G. Moisture Barrier: Polyethylene sheet not less than 8 mils thick.

H. Liquid Chemical Floor Hardener: Colorless aqueous solution containing a blend of magnesium fluosilicate and zinc fluosilicate combined with a wetting agent, containing not less than two pounds of fluosilicates per gallon.

I. Absorptive Cover: Burlap cloth made from jute or kenaf, weighing approximately nine ounces per square yard, complying with AASHTO M182, Class 2.

J. Moisture-Retaining Cover: One of the following, complying with ASTM C 171.

1. Waterproof Paper.

2. Polyethylene Film.

3. Polyethylene-coated burlap.

K. Membrane-Forming Curing Compound: ASTM C 309, Type l unless other type acceptable to Engineer.

2.05 CONCRETE MIXING

A. Job-Site Mixing:

1. Mix materials for concrete in an acceptable drum type batch machine mixer. For mixers of one cubic yard, or smaller capacity, continue mixing at least 1 1/2 minutes, but not more than 5 minutes after all ingredients are in the mixer, before any part of the batch is released. For mixers of capacity larger than one cubic yard, increase the minimum 1 1/2 minutes of mixing time by 15 seconds for each additional cubic yard, or fraction thereof.

2. Provide a batch ticket for each batch discharged and used in the work, indicating the project identification name and number, date, mix time, quantity, and amount of water introduced.

B. Ready-Mix Concrete:

1. Comply with the requirements of ASTM C 94, and as herein specified.

2. Delete the references for allowing additional water to be added to the batch for material with insufficient slump. Addition of water to the batch will not be permitted.

3. During hot weather, or under conditions contributing to rapid setting of concrete, a shorter mixing time than specified in ASTM C 94 may be required.

4. When the air temperature is between 85F and 90F, reduce the mixing and delivery time from 1 1/2 hours to 75 minutes, and when the air temperature is above 90F, reduce the mixing and delivery time to 60 minutes.

2.06 FLOWABLE FILL

A. Furnish and place flowable fill as directed by the Engineer. Applications include bedding, encasement and closures for pipe, and general backfill for trenches.

B. All materials shall conform to the requirements of the Georgia Department of Transportation Specifications, current edition, Section 600 for controlled low strength flowable fill.

C. The Contractor shall submit mix designs for flowable fill to the Engineer for approval.

PART 3 – EXECUTION

3.01 FORMS

A. Design, erect, support, brace and maintain:

1. Design, erect, support, brace and maintain formwork to support vertical and lateral loads that might be applied until such loads can be supported by the concrete structure. Construct formwork so concrete members and structures are of correct size, shapes, alignment, elevation and position.

2. Design formwork to be readily removable without impact, shock or damage to cast-in-place concrete surfaces and adjacent materials.

3. Construct forms complying with ACI 347, to sizes, shapes, lines and dimensions shown, and to obtain accurate alignment, location, grades, level and plumb work in finished structures. Provide for openings, offsets, sinkages, keyways, recesses, moldings, rustications, reglets, chamfers, blocking, screeds, bulkheads, anchorages and inserts, and other features required in work. Use selected materials to obtain required finishes. Solidly butt joints and provide back-up at joints to prevent leakage of cement paste.

4. Fabricate forms for easy removal without hammering or prying against the concrete surfaces. Provide crush plates or wrecking plates where stripping may damage cast concrete surfaces. Provide top forms for inclined surfaces where slope is too steep to place concrete with bottom forms only. Kerf wood inserts for forming keyways, reglets, recesses, and the like, to prevent swelling and for easy removal.

5. Provide temporary openings where interior area of formwork is inaccessible for cleanout, for inspection before concrete placement, and for placement of concrete. Securely brace temporary openings and set tightly to forms to prevent loss of concrete mortar. Locate temporary openings on forms at inconspicuous locations.

6. Chamfer exposed corners and edges as shown, using wood, metal, PVC or rubber chamfer strips fabricated to produce uniform smooth lines and tight edge joints.

B. Form Ties:

1. Factory-fabricated, adjustable-length, metal form ties, designed to prevent form deflection, to prevent spalling concrete surfaces upon removal, and to prevent passage of water along tie surface through concrete.

2. Provide ties so portion remaining within concrete is at least l inch inside concrete, and do not leave holes larger than one-inch diameter in concrete surface.

C. Provisions for Other Trades: Provide openings in concrete formwork to accommodate work of other trades. Determine size and location of openings, recesses and chases from trades providing such items. Accurately place and securely support items built into forms.

D. Cleaning and Tightening: Thoroughly clean forms and adjacent surfaces to receive concrete. Remove chips, wood, sawdust, dirt or other debris just before concrete is placed. Retighten forms and bracing after concrete placement if required to eliminate mortar leaks and maintain proper alignment.

3.02 PLACING REINFORCEMENT

A. Comply with the specified codes and standards, and Concrete Reinforcing Steel Institute's recommended practice for "Placing Reinforcing Bars", for details and methods of reinforcement placement and supports, and as herein specified.

B. Clean reinforcement of loose rust and mill scale, earth, ice, and other materials that reduce or destroy bond with concrete.

C. Accurately position, support and secure reinforcement against displacement by formwork, construction, or concrete placement operations. Locate and support reinforcing by metal chairs, runners, bolsters, spacers and hangers, as required.

D. Place reinforcement to obtain at least the minimum coverages for concrete protection. Arrange, space and securely tie bars and bar supports to hold reinforcement in position during concrete placement operations. Set wire ties so ends are directed into concrete, not toward exposed concrete surfaces.

E. Do not place reinforcing bars more than 2 inches beyond the last leg of continuous bar support. Do not use supports as bases for runways for concrete conveying equipment and similar construction loads.

F. Install welded wire fabric in as long lengths as practicable. Lap adjoining pieces at least one full mesh and lace splices with wire. Offset end laps in adjacent widths to prevent continuous laps in either direction.

3.03 JOINTS

A. Construction Joints:

1. Locate and install necessary construction joints, which are not shown on the Drawings, so as not to impair the strength and appearance of the structure, as acceptable to the Engineer.

2. Provide keyways in all construction joints in walls, slabs and between walls and footings; accepted bulkheads designed for this purpose may be used for slabs. Construct keyways l l/2 inches deep unless otherwise detailed.

3. Place construction joints perpendicular to the main reinforcement. Continue all reinforcement across construction joints.

B. Waterstops: Provide waterstops in construction joints as indicated. Install waterstops to form a continuous diaphragm in each joint. Make provisions to support and protect waterstops during the progress of the work. Fabricate field joints in waterstops in accordance with manufacturer's printed instructions. Protect waterstop material from damage where it protrudes from any point.

C. Isolation Joints in Slabs-on-Ground: Construct isolation joints in slabs on ground at all points of contact between slabs on ground and vertical surfaces, such as column pedestals, foundation walls, grade beams and elsewhere as indicated.

D. Control Joints in Slabs-on-Ground:

1. Construct control joints in slabs-on-ground to form panels of patterns as shown. Use inserts 1/8 to 1/4 inch wide x 1/4 of the slab depth, unless otherwise shown.

2. Form control joints by inserting a premolded plastic, hardboard or fiberboard strip into the fresh concrete until the top surface of the strip is flush with the slab surface. Tool slab edges round on each side of insert. After the concrete has cured, remove inserts and clean groove of loose debris.

3.04 INSTALLATION OF EMBEDDED ITEMS

A. General: Set and build into the work anchorage devices and other embedded items required for other work that is attached to, or supported by, cast-in-place concrete. Use setting drawings, diagrams, instructions and directions provided by suppliers of the items to be attached thereto.

B. Edge Forms and Screed Strips for Slabs: Set edge forms or bulkheads and intermediate screed strips for slabs to obtain the required elevations and contours in the finished slab surface. Provide and secure units sufficiently strong to support the types of screeds required. Align the concrete surface to the elevation of the screed strips by the use of strike-off templates or accepted compacting type screeds.

3.05 PREPARATION OF FORM SURFACES

A. Clean re-used forms of concrete matrix residue, repair, and patch as required to return forms to acceptable surface condition. Coat the contact surfaces of forms with a form-coating compound before reinforcement is placed.

B. Thin form-coating compounds only with thinning agent of type, and in amount, and under conditions of the form-coating compound manufacturer's directions. Do not allow excess form-coating material to accumulate in the forms or to come into contact with concrete surfaces against which fresh concrete will be placed. Apply in compliance with manufacturer's instructions.

C. Coat steel forms with a non-staining, rust-preventative form oil or otherwise protect against rusting. Rust-stained steel formwork is not acceptable.

3.06 CONCRETE PLACEMENT

A. Pre-Placement Inspection:

1. Before placing concrete, inspect and complete the formwork installation, reinforcing steel, and items to be embedded or cast-in. Notify other crafts to permit the installation of their work; cooperate with other trades in setting such work, as required. Moisten wood forms immediately before placing concrete, where form coatings are not used.

2. Coordinate the installation of joint materials and moisture barriers with placement of forms and reinforcing steel.

B. Construction Sequence: Before placing any concrete, complete blasting, heavy earthwork and other construction operations that might cause damage to concrete structures.

1. General:

a. Comply with ACI 304, and as herein specified.

b. Deposit concrete continuously or in layers of such thickness that no concrete will be placed on concrete which has hardened sufficiently to cause the formation of seams or planes of weakness within the section. If a section cannot be placed continuously, provide construction joints as herein specified. Deposit concrete as nearly as practicable to its final location to avoid segregation due to rehandling or flowing.

c. At all horizontal waterstops, place 1/2 inch of grout for each foot of wall pour height in bottom of forms immediately before pouring concrete walls.

2. Placing Concrete in Forms:

a. Deposit concrete in forms in horizontal layers not deeper than 24 inches and in a manner to avoid inclined construction joints. Where placement consists of several layers, place each layer while preceding layer is still plastic to avoid cold joints.

b. Consolidate placed concrete by mechanical vibrating equipment supplemented by hand spading, rodding, or tamping. Use equipment and procedures for consolidation

of concrete in accordance with ACI 309 recommended practices.

c. Do not use vibrators to transport concrete inside of forms. Insert and withdraw vibrators vertically at uniformly spaced locations not farther than the visible effectiveness of the machine. Place vibrators to rapidly penetrate the placed layer of concrete and at least 6 inches into the preceding layer. Do not insert vibrators into lower layers of concrete that have begun to set. At each insertion limit the duration of vibration to the time necessary to consolidate the concrete and complete embedment of reinforcement and other embedded items without causing segregation of the mix.

3. Placing Concrete Slabs:

a. Deposit and consolidate concrete in a continuous operation, within the limits of construction joints, until the placing of a panel or section is completed.

b. Consolidate concrete during placing operations so that concrete is thoroughly worked around reinforcement and other embedded items and into corners.

c. Bring slab surfaces to the correct level with a straightedge and strikeoff. Use bull floats or darbies to smooth the surface, leaving it free of humps or hollows. Do not disturb the slab surfaces prior to beginning finishing operations.

d. Maintain reinforcing in the proper position during concrete placement operations.

4. Cold Weather Placing:

a. Protect concrete work from physical damage or reduced strength that could be caused by frost, freezing actions, or low temperatures, in compliance with ACI 306R and as herein specified.

b. When air temperature has fallen to or is expected to fall below 40F, uniformly heat all water and aggregates before mixing to obtain a concrete mixture temperature of not less than 50F, and not more than 80F at point of placement.

c. Do not use frozen materials or materials containing ice or snow. Do not place concrete on frozen subgrade or on subgrade containing frozen materials.

d. Do not use calcium chloride, salt and other materials containing antifreeze agents or chemical accelerators, unless otherwise accepted in writing by the Engineer.

5. Hot Weather Placing:

a. When hot weather conditions exist that would seriously impair the quality and strength of concrete, place concrete in compliance with ACI 305R and as herein specified.

b. Cool ingredients before mixing to maintain concrete temperature at time of placement below 90F. Mixing water may be chilled, or chopped ice may be used to control the concrete temperature, provided the water equivalent of the ice is calculated to the total amount of mixing water.

c. Cover reinforcing steel with water-soaked burlap if it becomes too hot, so that the steel temperature will not exceed the ambient air temperature immediately before embedment in concrete.

d. Fog spray forms, reinforcing steel and subgrade just before concrete is placed.

e. Do not use retarding admixtures without the written acceptance of the Engineer.

3.07 FINISH OF FORMED SURFACES

A. Concealed Surfaces: For formed concrete surfaces not exposed-to-view in the finished work, leave surface finish imparted by the form facing material used, with defective areas and form tie voids repaired and patched as specified, and fins and other projections exceeding l/4 inch in height rubbed flush.

B. Visible Surfaces: For formed concrete surfaces exposed-to-view, including those surfaces of water or other material holding structures visible when the structure is empty, or surfaces that are to be covered with a thin or flexible finish material bonded to the concrete, perform finish operations as specified above under "Concealed Surfaces," and in addition wet and rub entire surfaces with a carborundum stone of medium fineness until all form marks and other surface irregularities have been removed and a uniform

surface appearance achieved. Do not create a plaster coating on concrete.

C. Unformed Visible Surfaces: At tops of walls, horizontal offsets and similar unformed surfaces occurring adjacent to formed surfaces, strike-off smooth and finish with a texture matching adjacent formed surfaces. Continue final surface treatment of formed surfaces uniformly across adjacent unformed surfaces.

3.08 MONOLITHIC SLAB FINISHES

A. Scratch Finish:

1. Apply scratch finish to monolithic slab surfaces that are to receive concrete floor topping or mortar setting beds for tile, Portland cement terrazzo, and other bonded applied cementitious finish flooring material, and as otherwise indicated.

2. After placing slabs, plane surface so that depressions between high spots do not exceed 1/2 inch under a 10-foot straightedge. Slope surfaces uniformly to drains where required. After leveling, roughen surface before final set, with stiff brushes, brooms or rakes.

B. Float Finish:

1. Apply float finish to monolithic slab surfaces that are to receive trowel finish and other finishes as hereinafter specified, and slab surfaces which are to be covered with membrane or elastic waterproofing, membrane or elastic roofing, or sand-bed terrazzo, and as otherwise indicated.

2. After screeding, consolidating and leveling concrete slabs, do not work surface until ready for floating. Begin floating when surface water has disappeared or when concrete has stiffened sufficiently to permit operation of floats. Consolidate surface with power-driven floats, or by hand-floating if area is small or inaccessible to power units. Check and level surface plane so that depressions between high spots do not exceed 6/16 inch under a 10 foot straightedge. Cut down high spots and fill low spots. Uniformly slope surfaces to drains. Immediately after leveling, refloat surface to a uniform, smooth, granular texture.

C. Trowel Finish:

1. Apply trowel finish to monolithic slab surfaces that are to be exposed-to-view, unless otherwise shown, and slab surfaces that are to be covered with resilient flooring, carpet, ceramic or quarry tile, paint or other thinfilm finish coating system.

2. After floating, begin first trowel finish operation using a power-driven trowel. Begin final troweling when surface produces a ringing sound as trowel is moved over surface. Consolidate concrete surface by final hand-troweling operation, free of trowel marks, uniform in texture and appearance, and with a level surface plane so that depressions between high spots do not exceed 1/8 inch under a l0 foot straightedge. Grind smooth surface defects that would telegraph through applied floor covering system.

D. Chemical-Hardener Finish:

1. Apply chemical-hardener finish to interior concrete floors where indicated. Apply liquid chemical-hardener after complete curing and drying of the concrete surface. Dilute liquid hardener with water, and apply in three coats; first coat, 1/3 strength; second coat, 1/2 strength; third coat, 2/3 strength. Evenly apply each coat, and allow 24 hours for drying between coats.

2. Apply proprietary chemical hardeners, in accordance with manufacturer's printed instructions.

3. After final coat of chemical-hardener solution is applied and dried, remove surplus hardener by scrubbing and mopping with water.

E. Non-Slip Broom Finish:

1. Apply non-slip broom finish to exterior concrete platforms, steps and ramps, and elsewhere as indicated.

2. Immediately after trowel finishing, slightly roughen concrete surface by brooming with fiber bristle broom perpendicular to main traffic route. Coordinate required final finish with the Engineer before application.

F. Trowel and Fine Broom Finish: Where ceramic or quarry tile is to be installed with thin-set mortar, apply trowel finish as specified, then immediately follow with slightly scarifying surface by fine brooming.

3.09 CONCRETE CURING AND PROTECTION

A. General:

1. Protect freshly placed concrete from premature drying, and excessive cold or hot temperature, and maintain without drying at a relatively constant temperature for a period of time necessary for hydration of cement and proper hardening.

2. Start initial curing as soon as free water has disappeared from concrete surface after placing and finishing. Weather permitting, keep continuously moist for not less than 7 days.

3. Begin final curing procedures immediately following initial curing and before concrete has dried. Continue final curing for at least seven days and in accordance with ACI 30l procedures. Avoid rapid drying at end of final curing period.

B. Curing Methods: Perform curing of concrete by one or more of the following methods as selected by the Contractor:

1. Provide moist curing: by covering concrete surfaces with specified absorptive cover, thoroughly saturating cover with water and keeping continuously wet. Place absorptive cover to provide coverage of concrete surfaces and edges, with 4 inch lap over adjacent absorptive cover.

2. Provide moisture-cover curing: by covering concrete surfaces with moisture-retaining cover, placed in widest practicable width with sides and ends lapped at least 3 inches and sealed by waterproof tape or adhesive. Immediately repair any holes or tears during curing period using cover material and waterproof tape.

3. Provide membrane curing: by applying compound to damp concrete surfaces as soon as film has disappeared. Apply uniformly in continuous operation by power-spray or roller equipment in accordance with manufacturer's directions. Recoat areas that are subjected to heavy rainfall within three hours after initial application. Maintain continuity of coating and repair damage during curing period.

4. Do not use membrane curing compounds on surfaces which are to be covered with a coating material applied directly to concrete or with a covering material bonded to concrete, such as other concrete, liquid floor hardener, waterproofing, dampproofing,

membrane roofing, flooring, painting, and other coatings and finish materials, unless otherwise acceptable to the Engineer.

C. Curing Formed Surfaces: Cure formed concrete surfaces, including undersides of beams, supported slabs and other similar surfaces by moist curing with forms in place for full curing period or until forms are removed. If forms are removed, continue curing by methods specified above, as applicable.

D. Curing Unformed Surfaces: Initially cure unformed surfaces, such as slabs, floor topping, and other flat surfaces by moist curing. Final cure unformed surfaces, unless otherwise specified, by methods specified above, as applicable.

3.10 FORM REMOVAL

A. In all cases, time and sequence of concrete form removal is at Contractor discretion. Formwork supporting weight of concrete, such as beams and slabs, must remain in place at least 14 days and until concrete has attained minimum design 28 day compressive strength. Formwork not supporting weight of concrete, such as sides of beams, walls and columns, may be removed no sooner than 48 hours after placement of concrete or when concrete is sufficiently hard as not to be damaged by form removal operations.

3.11 RE-USE OF FORMS

A. Clean and repair surfaces of forms to be re-used in the work. Split, frayed, delaminated or otherwise damaged form facing material will not be acceptable. Apply new form coating compound as specified for new formwork.

B. When forms are extended for successive concrete placement, thoroughly clean surfaces, remove fins and laitance, and tighten forms to close joints. Align and secure joints to avoid offsets. Do not use "patched" forms for exposed concrete surfaces, except as acceptable to Engineer.

3.12 MISCELLANEOUS CONCRETE ITEMS

A. Filling-In: Fill-in holes and openings left in concrete structures for passage of work by other trades, unless otherwise shown or directed, after work of other trades is in place. Mix, place and cure concrete as herein specified, to blend with in-place construction. Provide other miscellaneous concrete filling shown or required to complete work.

B. Curbs: Provide monolithic finish to interior curbs by stripping forms while concrete is still green and steel-troweling surfaces to a hard, dense finish with corners, intersections and terminations slightly rounded.

C. Equipment Bases and Foundations: Provide machine and equipment bases and foundations, as shown on Drawings. Set anchor bolts for machines and equipment to template at correct elevations, complying with certified diagrams or templates of manufacturer furnishing machines and equipment. Grout base plates and foundations as indicated, using specified non-shrink grout. Use non-metallic grout for exposed conditions, unless otherwise indicated.

D. Steel Pan Stairs: Provide concrete fill for steel pan stair treads and landings and associated items. Cast-in safety inserts and accessories as shown on Drawings. Screed, tamp, and finish concrete surfaces as scheduled.

E. Reinforced Masonry: Provide concrete grout for reinforced masonry lintels and bond beams where indicated on Drawings and as scheduled. Maintain accurate location of reinforcing steel during concrete placement.

F. Compaction Grouting: The Contractor shall confirm the Engineer's approximate location of void areas around the suspect sewer or manhole prior to installation of the injection pipes. All costs associated with the void investigation shall be incidental to the compaction grouting work. If necessary, the grouting operation shall be delayed until the Contractor can perform point repairs or other rehabilitative measures to restore structural stability to the sewer. The grout injection rate shall not exceed 4.0 cubic feet per minute, unless authorized by the Engineer. Progress the grouting process in stages using the "bottom up" method. The "bottom up" method stages start at the bottom of the grouting pipe, at least 1 foot into the underlying dense soil strata, progressing upward at maximum intervals of 2 feet. The Contractor shall carefully control grout pumping rates and injection pressures. Injection holes lost during grouting operations shall be replaced by the Contractor at no additional cost to the Owner. For injection pipes installed from the interior of manholes, remove the injectors and patch the holes with quick setting hydraulic cement.

3.13 FLOWABLE FILL

A. Furnish and place flowable fill concrete as directed by the Engineer. Typical applications include bedding, encasement and closures for pipe and general backfill of trenches.

B. Contractor shall flood the pipeline, sequence Flowable Fill placement, provide straps, soil anchors or other approved means of restraint to

prevent flotation or misalignment that may occur at no additional cost to the City.

C. Flowable fill shall be protected from freezing for a period of 36 hours after placement.

D. All flowable fill shall be furnished and installed in accordance with Georgia Department of Transportation Standard Specification Section 600 – Controlled Low Strength Flowable Fill and/or City of Atlanta Department of Public Works flowable fill requirements whichever is deemed appropriate by the Engineer.

3.14 CONCRETE SURFACE REPAIRS

A. Patching Defective Areas:

1. Repair and patch defective areas with cement mortar immediately after removal of forms, but only when acceptable to Engineer.

2. Cut out honeycomb, rock pockets, voids over l/8 inch in any dimension and holes left by tie rods and bolts, down to solid concrete but, in no case to a depth of less than one inch. Make edges of cuts perpendicular to the concrete surface. Thoroughly clean, dampen with water and brush-coat the area to be patched with neat cement grout. Proprietary patching compounds may be used when acceptable to Engineer.

3. For exposed-to-view surfaces, blend white Portland cement and standard Portland cement so that, when dry, patching mortar will match color of surrounding surface. Provide test areas at inconspicuous location to verify mixture and color match before proceeding with patching. Compact mortar in place and strike-off slightly higher than surrounding surface.

B. Repair of Formed Surfaces:

1. Remove and replace concrete having defective surfaces if defects cannot be repaired to satisfaction of Engineer. Surface defects, as such, include color and texture irregularities, cracks, spalls, air bubbles, honeycomb, rock pockets and holes left by tie rods and bolts; fins and other projections on surface; and stains and other discolorations that cannot be removed by cleaning. Flush out form tie holes, fill with dry pack mortar, or precast cement core plugs secured in place with bonding agent.

2. Repair concealed formed surfaces, where possible, that contain defects that adversely affect the durability of the concrete. If defects cannot be repaired, remove and replace the concrete.

C. Repair of Unformed Surfaces:

1. Test unformed surfaces, such as monolithic slabs, for smoothness and to verify surface plane to tolerances specified for each surface and finish. Correct low and high areas as herein specified. Test unformed surfaces sloped to drain for trueness of slope, in addition to smoothness, using a template having required slope.

2. Repair finished unformed surfaces that contain defects that adversely affect durability of concrete. Surface defects, as such, include crazing, cracks in excess of 0.01 inch wide or which penetrate to reinforcement or completely through non-reinforced sections regardless of width, spalling, pop-outs, honeycomb, rock pockets, and other objectionable conditions.

3. Correct high areas in unformed surfaces by grinding, after concrete has cured at least 14 days.

4. Correct low areas in unformed surfaces during, or immediately after completion of surface finishing operations by cutting out low areas and replacing with fresh concrete. Finish repaired areas to blend into adjacent concrete. Proprietary patching compounds may be used when acceptable to the Engineer.

5. Repair defective areas, except random cracks and single holes not exceeding one-inch diameter, by cutting out and replacing with fresh concrete. Remove defective areas to sound concrete with clean, square cuts and expose reinforcing steel with at least 3/4 inch clearance all around. Dampen concrete surfaces in contact with patching concrete, and brush with a neat cement grout coating or concrete bonding agent. Place patching concrete before grout takes its initial set. Mix patching concrete of same materials to provide concrete of the same type or class as original concrete. Place, compact and finish to blend with adjacent finished concrete. Cure in the same manner as adjacent concrete.

6. Repair isolated random cracks and single holes not over one inch in diameter by dry-pack method. Groove top of cracks and cutout holes to sound concrete and clean of dust, dirt and loose particles. Dampen cleaned concrete surfaces and brush with neat cement grout coating or concrete bonding agent. Place dry-pack before cement grout takes its initial set. Mix dry-pack, consisting of one

part Portland cement to 2 1/2 parts fine aggregate passing a No. l6 mesh sieve, using only enough water as required for handling and placing. Compact dry-pack mixture in place and finish to match adjacent concrete. Keep patched areas continuously moist for not less than 72 hours.

7. Repair methods not specified above may be used, subject to acceptance of Engineer.

8. Agreement by the Engineer to permit repair or patching of concrete does not waive the Engineer's authority to require complete removal and replacement of defective concrete pours should the patch not prove satisfactory to the Engineer, due either to deficiency in strength, function or appearance.

END OF SECTION

SECTION 03600
GROUT

PART 1 GENERAL

1.01 SCOPE

A. The work covered under this Section includes furnishing all labor, materials, equipment, and incidentals required to furnish and install grout as shown on the Drawings and as specified herein.

B. The types of grout include the following:

1. Non-shrink, epoxy type

2. Non-shrink, non-metallic type

3. Cement-sand

4. Masonry

1.02 SUBMITTALS

A. Submittals shall be made in accordance with the requirements of the General Conditions of the Contract Documents. In addition, the following specific information shall be provided:

1. Copies of manufacturer's specifications and installation instructions for all proprietary materials.

2. Reports and Certificates:

a. For proprietary materials, submit copies of reports on quality control tests.
b. For nonproprietary materials, submit certification that materials meet specification requirements.

1.03 QUALITY ASSURANCE

A. Reference Standards: The Contractor shall comply with the applicable provisions and recommendations of the latest editions of the following standards, except as otherwise shown on the Drawings or specified herein.

1. ASTM C109 - Standard Specification for Compressive Strength of Hydraulic Cement Mortars (using 2-in. [or 50 mm.] Cube Specimens)

2. ASTM C150 - Standard Specification for Portland Cement

3. ASTM C191 - Standard Test Methods for Time of Setting of Hydraulic Cement by Vicat Needle

4. ASTM C476 – Standard Specification for Grout for Masonry

5. ASTM C531 – Standard Test Method for Linear Shrinkage and Coefficient of Thermal Expansion of Chemical-Resistant Mortars, Grouts, Monolithic Surfacings and Polymer Concretes

6. ASTM C827 – Standard Test Method for Change in Height at Early Ages of Cylindrical Specimens of Cementitious Mixtures

7. ASTM C881 – Standard Specification for Epoxy-Resin-Base Bonding Systems for Concrete

8. ASTM C1019 – Standard Test method for Sampling and Testing Grout

9. ASTM C1107 – Standard Specification for Packaged, Dry, Hydraulic Cement Grout (Nonshrink)

10. CRD C621 – Corps of Engineers Specifications for Non-Shrink Grout

1.04 PRODUCT DELIVERY, STORAGE AND HANDLING

A. Prevent damage to or contamination of grouting materials during delivery, handling and storage.

B. Store all grouting materials in undamaged condition with seals and labels intact as packaged by the manufacturer.

PART 2 PRODUCTS

2.01 MATERIALS

A. Non-shrink Epoxy Grout: Non-shrink epoxy grout shall be a 100% solids, premeasured, prepackaged system containing thermosetting epoxy resins, expansive additives and inert fillers. Non-shrink epoxy grout shall be equal to HP Epoxy grout as manufactured by Five Star Products, Inc.

B. Non-Shrink, Non-Metallic Grout: Non-shrink, non metallic grout shall be a pre-proportioned, prepackaged cement based grout requiring only the addition of potable water. The grout shall not contain metallic aggregate, expansive cement or additives. The grout shall contain an air release aggregate to

generate expansion. Grout shall meet the performance requirements of ASTM C1107. Non-shrink non-metallic grout shall be equal to cementitious grout as manufactured by Five Star Products, Inc.

C. Cement-Sand Grout:

1. Except where otherwise specified use 1 part cement to 3 parts sand complying with the following:

   a. Cement: ASTM C150, Type II.
   b. Sand: ASTM C33.

2. For water repelling and shrinkage reducing requirements use admixtures.

D. Water: Water shall be clean, fresh, potable water free from injurious amounts of oils, acids, alkalies or organic matter.

E. Masonry Grout:

1. Masonry Grout shall conform to ASTM C476 and shall have a compressive strength of 2000 psi.

2. Masonry grout shall be used for leveling surfaces and sloping surfaces.

F. Epoxy Resin Adhesives:

1. High-strength, structural, epoxy paste adhesive shall be a 2 component, 100% solids, moisture tolerant, high-modulus structural paste adhesive conforming to ASTM C881. Epoxy paste adhesive shall be used for structural bonding of concrete and masonry and for interior, vertical and overhead repair of concrete as an epoxy mortar binder. Epoxy paste adhesive shall be equal to Sikadur 31, Hi-Mod Gel as manufactured by Sika Corporation.

2. High-modulus, high-strength, epoxy bonding/grouting adhesive shall be a multi-purpose 2 component 100% solids, moisture tolerant, structural epoxy adhesive conforming to ASTM C881. Epoxy adhesive shall be used for bonding fresh concrete to existing concrete and steel and grouting of horizontal cracks and joints in concrete by gravity feed. Epoxy adhesive shall be equal to Sikadur 32. Hi-Mod as manufactured by Sika Corporation.

PART 3 EXECUTION

3.01 INSTALLATION

A. General:

1. Place grout as shown on the Drawings and in accordance with manufacturer's instructions. If manufacturer's instructions conflict with the Specifications do not proceed until Engineer provides clarification.

2. Dry packing will not be permitted unless approved by the Engineer.

3. Manufacturers of proprietary products shall make available upon 72 hours notification the services of a qualified, full time employee to aid in assuring proper use of the product under job conditions.

4. Placing grout shall conform to temperature and weather limitations in Section 03300.

5. Surface to be grouted is to be adequately cured, cleaned dampened and roughened per manufacturer recommendations to insure adequate bonding.

B. Pipe Railings:

1. After posts have been properly inserted into the holes or sleeves, fill the annular space between posts and sleeve with the non-shrink, non-metallic grout. Bevel grout at juncture with post so that moisture flows away from post.

2. Do not grout railing designated as "removable sections".

C. Grout for Dowelling and Anchor Bolts:

1. Grout shall be introduced at the bottom of the drill holes using a caulking tube or other injection means. The hole shall be blown out or pumped dry prior to the introduction of grout into the hole. Care shall be taken to adequately fill the hole with grout before the dowel or anchor rod is inserted, to insure complete contact with the anchor for its full length.

2. A plug shall be placed in the top of the hole to hold the bars securely until the grout sets. Special care shall be taken to insure against any movement of the bars which have been placed.

3. Epoxy resin adhesive may be used in accordance with manufacturer's recommended application.

D. Grouting for Waterstops:

1. Grout for PVC waterstops to be the non-shrink, non-metallic type. Refer

to Section 03250 for installation procedures.

2. Grout from ready-mix plant conforming to applicable requirements of Section 03300 may be substituted at no additional compensation to the Contractor.

E. Grouting for Slide Gates: Provide minimum of 1-inch thickness of non-shrink, non-metallic grout under frames. Gates shall be coated with an approved epoxy coating prior to installing and grouting.

F. Grouting for Bearing Plates and Equipment: Use non-shrink, non-metallic grout for setting bearing plates and equipment. Provide a minimum grout thickness of 1-inch.

G. Patchwork at Demolition Areas:

1. Furnish and install non-shrink, non-metallic grout for dry packing as required to patch all mechanical, electrical and miscellaneous penetrations which are either designated to be patched or are the result of abandoned, removed or relocated material and equipment. Prepare surface and place grout as recommended by manufacturer and as specified. Finish grout off flush with existing surface.

2. Reinforce with approved wire mesh and use approved structural concrete for penetrations larger than 1/2 square feet. Conform to requirements of Sections 03100, 03200 and 03300.

+ + + END OF SECTION 03600 + + +

EXHIBIT D

ADDITIONAL CONTRACT DOCUMENTS

APPENDIX A

OFFICE OF CONTRACT COMPLIANCE REQUIREMENTS

CITY OF ATLANTA

Kasim Reed
Mayor

SUITE 1700
55 TRINITY AVENUE, SW
ATLANTA, GA 30303
(404) 330-6010 Fax: (404) 658-7359
Internet Home Page: www.atlantaga.gov

OFFICE OF
CONTRACT COMPLIANCE
Larry Scott
Director
Lscott@atlantaga.gov

August 25, 2015

RE: Project No.: FC-8412, Annual Contract for Sanitary Sewer Repair

Dear Prospective City of Atlanta Bidder:

The Office of Contract Compliance information is an integral part of every City of Atlanta bid. All Bidders are required to make efforts to ensure that businesses are not discriminated against on the basis of their race, ethnicity or gender, and to demonstrate compliance with these program requirements at or prior to the time of Bid opening, or upon request by OCC. Bidders are required to ensure that prospective subcontractors, vendors, suppliers and other potential participants are not denied opportunities to compete for work on a City contract on the basis of their race, ethnicity, or gender, and must afford all firms, including those owned by racial or ethnic minorities and women, opportunities to participate in the performance of the business of the City to the extent of their availability, capacity and willingness to compete. Please read all of the information very carefully. Pay close attention to the specific goal of minority and female business enterprises for this project and the EBO program reminders listed on page 6.

If you have any questions about the information included in this section of the solicitation, please contact the City of Atlanta Office of Contract Compliance at (404) 330-6010.

The City of Atlanta looks forward to the opportunity to do business with your company.

Table of Contents

Policy Statement 1

Implementation of EBO Policy 2

Determination of Non-discrimination during Bid Process 2

OCC Review of Bidder Submissions 3

Equal Business Opportunity Program Bid/RFP Submittals 4

Monitoring Of EBO Policy 4

Implementation of EEO Policy 4

Monitoring of EEO Policy 4

First Source Jobs Program Policy Statement 5

Equal Business Opportunity M/FBE Goals for this Project 6

Equal Business Opportunity Program Reminders 7

Covenant of Non-Discrimination (EBO1) 8

Subcontractor Contact Form (EBO2) ..... 9 - 10

Subcontractor Utilization Form (EBO3) 11

First Source Job Information (Form 4) 12

First Source Job Information (Form 5) 13

CITY OF ATLANTA

EQUAL BUSINESS OPPORTUNITY
EQUAL EMPLOYMENT OPPORTUNITY

POLICY STATEMENT

It is the policy of the City of Atlanta to promote full and equal business opportunity for all persons doing business with the City. The City must ensure that firms seeking to participate in contracting and procurement activities with the City are not prevented from doing so on the basis of the race or gender of their owners. The City is committed to ensuring that it is not a passive participant in any private scheme of discrimination. To ensure that businesses are not discriminated against with regard to prime contracting, subcontracting or other partnering opportunities with the City, the City has developed an Equal Business Opportunity (EBO) Program. It is also the policy of the City of Atlanta to actively promote equal employment opportunities for minority and female workers and prohibit discrimination based upon race, religion, color, sex, national origin, marital status, physical handicap or sexual orientation through the City's Equal Employment Opportunity (EEO) Program. The purpose of the Equal Business Opportunity and Equal Employment Opportunity Programs is to mitigate the present and ongoing effects of the past and present discrimination against women and minority owned businesses and women and minority workers so that opportunity, regardless of race or gender, will become institutionalized in the Atlanta marketplace. It is important to note that all bidders, without exception, including minority and female owned business enterprises, must comply with the City of Atlanta's EBO and EEO Program requirements. Goals for minority and female business enterprises are set for this project on page 6.

Implementation of EBO Policy

The Office of Contract Compliance will review information submitted by Bidders pertaining to efforts to promote opportunities for diverse businesses, including M/FBEs, to compete for business as subcontractors and/or Suppliers. A Bidder is eligible for award of a City contract upon a finding by OCC that the Bidder has engaged in, and provided with its bid submission documentation of, efforts to ensure that its process of soliciting, evaluating and awarding subcontracts, placing orders, and partnering with other companies has been non-discriminatory. To assist prime contractors in this effort, the Office of Contract Compliance has set forth in this solicitation document the M/FBE goals within the relevant NAICS Codes, for this Project.

For subcontracting, the Subcontractor Project Plan must include all subcontractors to be utilized on the project, detail the services to be performed, the dollar value of the work to be performed by each subcontractor, and the *City of Atlanta* M/FBE certification number and supplier id number.

For Suppliers, the Subcontractor Project Plan must include all suppliers to be utilized on the project, the supplies to be provided, including the dollar value of the supplies being provided and the *City of Atlanta* M/FBE certification number and supplier id number.

Determination of Non-discrimination During Bid Process

No Bidder shall be awarded a contract on an Eligible Project unless the Office of Contract Compliance determines that the Bidder has satisfied the non-discrimination requirements of section 2-1448 on such Eligible Project. Accordingly, each Bidder shall submit with each Bid the following

1. Covenant of Non Discrimination. Each Bidder shall submit with her/his Bid a Covenant of Non-Discrimination which is set forth herein as Exhibit EBO1.

2. Outreach efforts documentation. Each bidder shall submit with her/his bid written documentation demonstrating the bidder's outreach efforts to identify, contact, contract with, or utilize businesses, including certified M/FBEs and SBEs, as subcontractors or suppliers on the contract. This information shall be set forth on Exhibit EBO2, which is included herein.

3. Subcontractor project plan. Each bidder shall submit with her/his bid a completed and signed subcontractor project plan, in a form approved and provided by the office of contract compliance, which lists the name, address, telephone number and contact person of each subcontractor or other business to be used in the contract, the NAICS Code and the type of work or service each business will perform, the dollar value of the work and the scope of work, the ownership of each business by race and gender, if applicable the AABE, APABE, FBE, or HABE certification number of each business, and any other information requested by the office of contract compliance. In order for the office of contract compliance to officially consider a firm to be an M/FBE, the M/FBE firm must be certified by or have a certification application pending with the office of contract compliance prior to the bidder's submission of the bid. The subcontractor project plan shall not be changed or altered after approval of the plan and award of the contract without the written approval of the director of the office of contract compliance. A written letter to the director of the office of contract compliance requesting approval to

change the subcontractor project plan must be submitted prior to any change in the plan or termination of an M/FBE's contract.

OCC Review of Bidder Submissions

The Office of Contract Compliance shall determine whether a Bidder has satisfied the non-discrimination requirements of section 2-1448 based on its review of the Covenant of Non Discrimination, the Outreach Efforts Documentation, the Subcontractor Project Plan, and its review of other relevant facts and circumstances, including complaints received as part of the bid process. In reviewing the documents submitted by a Bidder to determine whether the Bidder has satisfied the non-discriminatory practices requirement of this section, the Office of Contract Compliance will consider, among other things, the total project dollars subcontracted to or expended for services performed by other businesses, including certified M/FBEs, whether such businesses perform Commercially Useful Functions in the work of the contract based upon standard industry trade practices, whether any amounts paid to Supplier businesses are for goods customarily and ordinarily used based upon standard industry trade practices, and the availability of certified M/FBEs within the relevant NAICS Codes for such Eligible Project.

(a) Receipt of Complaint of Discrimination in the Bid Process

The office of contract compliance shall accept complaints of alleged discrimination during the bid process regarding any participant in the bid process. Where the complaint of discrimination is specific to the procurement which is under consideration by the city, the office of contract compliance may investigate said complaint, determine its validity, and determine whether the actions complained of impact the bidder's responsiveness on the specific procurement. Allegations of discrimination based on events, incidents or occurrences which are unrelated to the specific procurement will be placed in the bidder's file maintained in the vendor relations database and handled in accordance with the procedure established in the city's vendor relations subdivision, section 2-1465, et seq.

(b) Determination of Violation of EBO Process

Where the office of contract compliance investigates a complaint of discrimination that is related to the specific bid process, the details of that investigation, including findings, shall be recorded and maintained in the vendor relations database, pursuant to section 2-1471.

(c) Office of Contract Compliance Determination of Non-Compliance

When, based upon the totality of the circumstances, the office of contract compliance determines that a bidder fails to satisfy the requirements of section 2-1448(a) of a city bid solicitation, the director of the office of contract compliance shall present a written determination of non-compliance to the Chief Procurement Officer which states the determination and lists the reasons for the determination. A bid that does not comply with the requirements set forth in section 2-1448(a) shall be deemed non-responsive and rejected.

Equal Business Opportunity Program Bid/RFP Submittals

The Office of Contract Compliance will make any determination of non-responsiveness. The covenant of non-discrimination, the outreach efforts documentation, the subcontractor project plan, and any other information required by OCC in the solicitation document pursuant to section 2-1448 must be completed in their entirety by each bidder and submitted with the other required bid documents in order for the bid to be considered as a responsive bid. Failure to timely submit these forms, fully completed, will result in the bid being considered as a non-responsive bid, and therefore, excluded from consideration.

Monitoring Of EBO Policy

Upon execution of a contract with the City of Atlanta, the successful bidder's Subcontractor Project Plan will become a part of the contract between the bidder and the City of Atlanta. The Subcontractor Project Plan will be monitored by the City of Atlanta's Office of Contract Compliance for adherence with the plan. The successful bidder will be required to provide specific EBO information on a monthly basis that demonstrates the use of subcontractors and suppliers as indicated on the Subcontractor Project Plan. The failure of the successful bidder to provide the specific EBO information by the specified date each month shall be sufficient cause for the City to withhold approval of the successful bidder's invoices for progress payments, increase the amount of the successful bidder's retainage, or evoke any other penalties as set forth in the City of Atlanta Code of Ordinances, Section 2-1452.

Implementation of EEO Policy

The City effectuates its EEO policy by adopting racial and gender work force availability for every contractor performing work for the City of Atlanta. These percentages are derived from the work force demographics set forth in the 2000 Census EEO file prepared by the United States Department of Commerce for the applicable labor pool normally utilized for the contract.

Monitoring of EEO Policy

Upon award of a contract with the City of Atlanta, the successful bidder must submit a Contract Employment Report (CER), describing the racial and gender make-up of the firm's work force. If the CER indicates that the firm's demographic composition does not meet the adopted EEO goals, the firm will be required to submit an affirmative action plan setting forth the steps to be taken to reach the adopted goals. The CER and the affirmative action plan, if necessary, will become a part of the contract between the successful bidder and the City of Atlanta. Compliance with the EEO requirements will be monitored by the Office of Contract Compliance.

First Source Jobs Program Policy Statement

It is the policy of the City of Atlanta to provide job opportunities to the residents of the City of Atlanta, whenever possible. Every contract with the City of Atlanta creates a potential pool of new employment opportunities. The prime contractor is expected to work with the First Source Jobs Program to fill at least 50% of all new entry-level jobs, which arise from this project, with residents of the City of Atlanta. For more specific information about the First Source Jobs Program contact:

Michael Sterling
Interim Executive Director
First Source Jobs Program
Atlanta Workforce Development Agency
818 Pollard Boulevard
Atlanta, GA 30315
(404) 546-3001

Equal Business Opportunity M/FBE Availability for this Project

Project No.: FC-8412, Annual Contract for Sanitary Sewer Repair

The EBO availability for the trade categories listed in this project are:

17.5% AABE and 13% FBE

Please be reminded that no Bidder shall be awarded a contract on an Eligible Project unless the Office of Contract Compliance determines that the Bidder has satisfied the non-discrimination requirements of section 2-1448 on such Eligible Project. Details of the O.C.C. review process for determination of non-discrimination are detailed on page 2 of this document.

Equal Business Opportunity Program Reminders

1. Joint Venture Agreements. The Joint Venture member businesses must have different race ownership, different gender ownership, or both. MFBE members of the Joint Venture must be certified as such by the Office of Contract Compliance. The Joint Venture team shall include in its submittal the MFBE certification number of each MFBE Joint Venture member.

2. Subcontractor Certification. It is the prime contractor's responsibility to verify that MFBEs included on the Subcontractor Project Plan are certified by the City of Atlanta's Office of Contract Compliance, or have a certification application pending with the City of Atlanta's Office of Contract Compliance at the time that the bid is submitted.

3. Reporting. The successful bidder must submit monthly EBO participation reports to the Office of Contract Compliance.

4. Subcontractor Contact Form. It is required that bidders list and submit information on **all subcontractors** they solicit for quotes, all subcontractors who contact them with regard to the project, and all subcontractors they have discussions with regarding the project. Failure to provide complete information on this form will result in your bid being declared non-responsive.

5. EBO Ordinance. The EBO Program is governed by the provisions of the EBO Ordinance set forth in the City of Atlanta Code Division 12, section 2 - 1441 through 2 -1464. The ordinance can be obtained from the City of Atlanta Clerk's Office at (404) 330-6032.

6. Supplier Participation. In order to receive full M/FBE credit, suppliers must manufacture or warehouse the materials, supplies, or equipment being supplied for use on the Eligible Project.

7. OCC Registry of Certified Firms. To access OCC's real time registry of vendors (certified or non-certified), visit our PRISM Compliance Management portal at: https://pro.prismcompliance.com/default.aspx. Next, click the drop down arrow under "Visit a Jurisdiction", select "City of Atlanta", and click "go!". Once there, you may search by industry or Certification to obtain your desired results. You may also go to the website: www.atlantaga.gov/contractcompliance and scroll down to the section heading "Registry of Certified Firms". Click OCC's quarterly list to access the current directory of certified firms."

COVENANT OF NON-DISCRIMINATION

The undersigned understands that it is the policy of the City of Atlanta to promote full and equal business opportunity for all persons doing business with the City of Atlanta. The undersigned covenants that we have not discriminated, on the basis of race, gender or ethnicity, with regard to prime contracting, subcontracting or partnering opportunities. The undersigned further covenants that we have completed truthfully and fully the required forms EBO-2 and EBO-3. Set forth below is the signature of an officer of the bidding entity with the authority to bind the entity.

_____
Signature of Attesting Party

_____
Title of Attesting Party

On this _____ day of _____, 20___, before me appeared _____, the person who signed the above covenant in my presence.

_____
Notary Public

Seal

FORM EBO-1

OFFICE OF CONTRACT COMPLIANCE

SUBCONTRACTOR CONTACT FORM

List all subcontractors or suppliers (Majority & Minority Owned) that were contacted regarding this project

Name of Sub-Contractor/ Supplier	City of Atlanta Supplier ID Number	Company Name, Contact Name, Address and Phone Number	City Of Atlanta Business License? *(Yes or No)*	Type of Work Solicited for	Business Ownership *(See Code below)*	Certification No. and Expiration Date	Results of Contact

Name of Sub-Contractor/ Supplier	City of Atlanta Supplier ID Number	Company Name, Contact Name, Address and Phone Number	City Of Atlanta Business License? (Yes or No)	Type of Work Solicited for	Business Ownership (see code below)	Certification No. and Expiration Date	Results of Contact

Business Ownership Code: AABE - African American Business Enterprise, HBE – Hispanic Business Enterprise, FBE – Female Business Enterprise. ABE – Asian Business Enterprise, NABE – Native American Business Enterprise

Proponent's Name: _____ Project Name: _____ FC#: _____

Signature: _____ Contact No: _____ Date: _____

EQUAL BUSINESS OPPORTUNITY SUBCONTRACTOR PROJECT PLAN
SUBCONTRACTOR/SUPPLIER UTILIZATION

List all Majority, Minority and Female Business Enterprise subcontractors/suppliers, including lower tiers, to be used on this project.

Name of Sub-contractor/ Supplier	City of Atlanta Supplier ID Number	Company Name, Address and Phone Number	City Of Atlanta Business License? (yes or no)	NAICS Code(s)	Type of Work to be Performed	Ownership of Business (see code below)	Certification No. and Expiration Date	Dollar ($) Value of Work & Scope of Work	Percentage of Total Bid Amount

Total MBE%_____
Total FBE% _____

Code: AABE - African American Business Enterprise, HABE – Hispanic American Business Enterprise, FBE – Female Business Enterprise. APABE – Asian (Pacific Islander) American Business Enterprise

Proponent's Co. Name: _____ Date: _____ FC#: _____

Proponent's Contact Number: _____ Project Name: _____

Signature: _____ _____

Form EBO-3

First Source Job Information

Company Name: _____

FC No.: _____

Project Name: _____

The following entry level positions will become available as a result of the above referenced contract with the City of Atlanta.

1.

2.

3.

4.

5.

Include a job description and all required qualifications for each position listed above.

Identify a company representative and contact phone number who will be responsible for coordinating with the First Source Jobs Program.

Company Representative: _____

Phone Number: _____

FORM 4

First Source Jobs Agreement

THIS AGREEMENT REGARDING THE USE OF THE FIRST SOURCE JOBS PROGRAM BY CONTRACTORS WITH THE CITY OF ATLANTA TO FILL ENTRY LEVEL JOBS is made and entered into by _____

This_____ day of_____, 201__.

The City of Atlanta requires the immediate beneficiary or primary contractor for every eligible project to enter into a First Source Jobs employment agreement. The contractor agrees to the following terms and conditions:

- The first source for finding employees to fill all entry level jobs Created by the eligible project will be the First Source Program.
- The contractor will make every effort to fill 50% of the entry level jobs created by this eligible project with applicants from the First Source Program.
- The contractor shall make good faith effort to reach the goal of this employment agreement.
- Details as to the number and description of each entry level job must me provided with the bid.
- The contractor shall comply with the spirit of the First Source Jobs Policy beyond the duration of this agreement and continue to make good faith attempts to hire employees of similar backgrounds to those participating in the First Source Program.
- The contractor as a condition of transfer, assignment or otherwise shall require the transferee to agree in writing to the terms of the employment Agreement.

Upon a determination that a beneficiary or contractor has failed to comply with the terms of this Agreement, the City may impose the following penalties based on the severity of the non-compliance:

- The City of Atlanta may withhold payment from the contractor.
- The City of Atlanta may withhold 10 percent of all future payments on the contract until the contractor is in compliance
- The City of Atlanta may refuse all future bids on city projects or applications for financials assistance in any form from the City until the contractor demonstrated that the First Source requirements have been met, or cancellation of the eligible project.
- The City of Atlanta may cancel the eligible project.

All terms stated herein can be found in the City of Atlanta Code of Ordinances Sections 5-8002 through 5-8005.

The undersigned hereby agrees to the terms and conditions set forth in this agreement.

_____

Contractor

APPENDIX B

INSURANCE AND BONDING REQUIREMENTS

APPENDIX B

INSURANCE & BONDING REQUIREMENTS

FC-8412, Annual Contract for Sanitary Sewer Repair Services

A. Preamble

The following requirements apply to all work under the agreement. Compliance is required by all Contractors/Consultants. **To the extent permitted by applicable law, the City of Atlanta ("City") reserves the right to adjust or waive any insurance or bonding requirements contained in this Appendix B and applicable to the agreement.**

1. Evidence of Insurance Required Before Work Begins

No work under the agreement may be commenced until all insurance and bonding requirements contained in this Appendix B, or required by applicable law, have been complied with and evidence of such compliance satisfactory to City as to form and content has been filed with City. Contractor/Consultant must provide City with a Certificate of Insurance that clearly and unconditionally indicates that Contractor/Consultant has complied with all insurance and bonding requirements set forth in this Appendix B and applicable to the agreement. If the Contractor/Consultant is a joint venture, the insurance certificate should name the joint venture, rather than the joint venture partners individually, as the primary insured**.** In accordance with the solicitation documents applicable to the agreement at the time Contractor/Consultant submits to City its executed agreement, Contractor/Consultant must satisfy all insurance and bonding requirements required by this Appendix B and applicable by law, and provide the required written documentation to City evidencing such compliance. In the event that Contractor/Consultant does not comply with such submittal requirements within the time period established by the solicitation documents applicable to the agreement, City may, in addition to any other rights City may have under the solicitation documents applicable to the agreement or under applicable law, make a claim against any bid security provided by Contractor/Consultant.

2. Minimum Financial Security Requirements

All companies providing insurance required by this Appendix B must meet certain minimum financial security requirements. These requirements must conform to the ratings published by A.M. Best & Co. in the current Best's Key Rating Guide - Property-Casualty. The ratings for each company must be indicated on the documentation provided by Contractor/Consultant to City certifying that all insurance and bonding requirements set forth in this Appendix B and applicable to the agreement have been unconditionally satisfied.

For all agreements, regardless of size, companies providing insurance or bonds under the agreement must meet the following requirements:

i) Best's rating not less than A-,
ii) Best's Financial Size Category not less than Class VII, and

iii) Companies must be authorized to conduct and transact insurance contracts by the Insurance Commissioner, State of Georgia.

iv) All bid, performance and payment bonds must be underwritten by a U.S. Treasury Circular 570 listed company.

If the issuing company does not meet these minimum requirements, or for any other reason is or becomes unsatisfactory to City, City will notify Contractor/Consultant in writing. Contractor/Consultant must promptly obtain a new policy or bond issued by an insurer acceptable to City and submits to City evidence of its compliance with these conditions.

Contractor/Consultant's failure to comply with all insurance and bonding requirements set forth in this Appendix B and applicable to the agreement will not relieve Contractor/Consultant from any liability under the agreement. Contractor/Consultant's obligations to comply with all insurance and bonding requirements set forth in Appendix B and applicable to the agreement will not be construed to conflict with or limit Contractor/Consultant's/Consultant's indemnification obligations under the agreement.

3. Insurance Required for Duration of Contract

All insurance and bonds required by this Appendix B must be maintained during the entire term of the agreement, including any renewal or extension terms, and until all work has been completed to the satisfaction of City.

4. Notices of Cancellation & Renewal

Contractor/Consultant must, notify the City of Atlanta in writing at the address listed below by mail, hand-delivery or facsimile transmission, within 2 days of any notices received from any insurance carriers providing insurance coverage under this Agreement and Appendix B that concern the proposed cancellation, or termination of coverage.

Enterprise Risk Management
68 Mitchell St. Suite 9100
Atlanta, GA 30303
Facsimile No. (404) 658-7450

Confirmation of any mailed notices must be evidenced by return receipts of registered or certified mail.

Contractor/Consultant shall provide the City with evidence of required insurance prior to the commencement of this agreement, and, thereafter, with a certificate evidencing renewals or changes to required policies of insurance at least fifteen (15) days prior to the expiration of previously provided certificates.

5. Agent Acting as Authorized Representative

Each and every agent acting as Authorized Representative on behalf of a company affording coverage under this contract shall warrant when signing the Accord Certificate of Insurance that specific authorization has been granted by

the Companies for the Agent to bind coverage as required and to execute the Acord Certificates of Insurance as evidence of such coverage. City of Atlanta coverage requirements may be broader than the original policies; these requirements have been conveyed to the Companies for these terms and conditions.

In addition, each and every agent shall warrant when signing the Acord Certificate of Insurance that the Agent is licensed to do business in the State of Georgia and that the Company or Companies are currently in good standing in the State of Georgia.

6. Certificate Holder

The **City of Atlanta** must be named as certificate holder. All notices must be mailed to the attention of **Enterprise Risk Management** at **68 Mitchell Street, Suite, 9100, Atlanta, Georgia 30303.**

7. Project Number & Name

The project number and name must be referenced in the description section of the insurance certificate.

8. Additional Insured Endorsements Form CG 20 26 07 04 or equivalent

The City must be covered as Additional Insured under all insurance (except worker's compensation and professional liability) required by this Appendix B and such insurance must be primary with respect to the Additional Insured. **Contractor/Consultant must submit to City an Additional Insured Endorsement evidencing City's rights as an Additional Insured for each policy of insurance under which it is required to be an additional insured pursuant to this Appendix B. Endorsement must not exclude the Additional Insured from Products - Completed Operations coverage. The City shall not have liability for any premiums charged for such coverage.**

9. Mandatory Sub-Contractor/Consultant Compliance

Contractor/Consultant must require and ensure that all subContractor/Consultants/subconsultants at all tiers to be sufficiently insured/bonded based on the scope of work performed under this agreement.

10. Self Insured Retentions, Deductibles or Similar Obligations

Any self insured retention, deductible or similar obligation will be the sole responsibility of the contractor.

B. Workers' Compensation and Employer's Liability Insurance

Contractor/Consultant must procure and maintain Workers' Compensation and Employer's Liability Insurance in the following limits to cover each employee who is or may be engaged in work under the agreement. :

Workers' Compensation. . . . . **Statutory**
Employer's Liability:
Bodily Injury by Accident/Disease **$1,000,000 each accident**
Bodily Injury by Accident/Disease **$1,000,000 each employee**
Bodily Injury by Accident/Disease **$1,000,000 policy limit**

C. Commercial General Liability Insurance

Contractor/Consultant must procure and maintain Commercial General Liability Insurance on form (CG 00 00 01 or equivalent) in an amount not less than **$1,000,000 per occurrence subject to a $2,000,000 aggregate**. The following indicated extensions of coverage must be provided:

- ☒ Contractual Liability
- ☒ Broad Form Property Damage
- ☒ Premises Operations
- ☒ Personal Injury
- ☒ Advertising Injury
- ☒ Fire Legal Liability
- ☒ Medical Expense
- ☒ Independent Contractor/Consultants/SubContractor/Consultants
- ☒ Products – Completed Operations
- ☒ Pesticide or Herbicide Applicator Coverage
- ☒ Explosion, Collapse and Underground (XCU) Liability
- ☒ Additional Insured Endorsement* (primary& non-contributing in favor of the City of Atlanta)
- ☒ Waiver of Subrogation in favor of the City of Atlanta

D. Commercial Automobile Liability Insurance

Contractor/Consultant must procure and maintain Automobile Liability Insurance in an amount not less than **$1,000,000** Bodily Injury and Property Damage combined single limit. The following indicated extensions of coverage must be provided:

- ☒ Owned, Non-owned & Hired Vehicles
- ☒ Waiver of Subrogation in favor of the City of Atlanta

If Contractor/Consultant does not own any automobiles in the corporate name, non-owned vehicle coverage will apply and must be endorsed on either Contractor/Consultant’s personal automobile policy or the Commercial General Liability coverage required under this Appendix B.

E. Excess or Umbrella Liability Insurance

Contractor/Consultant shall procure and maintain a policy providing Excess or Umbrella Liability Insurance which is at least as broad as the underlying policy. This insurance, which shall be maintained throughout the life of the contract, shall be in an amount of not less than **$3,000,000 per occurrence**.

☒ Coverage must follow form with primary policy
☒ May be used to achieve minimum liability limits
☒ Coverage must be as broad as primary policy

F. Property Coverage/Inland Marine

Contractor/Consultant shall procure and maintain all risk property coverage in an amount equal to replacement value for all equipment, furniture, fixtures, machinery and/ or personal property.

G. Professional Liability Insurance

Contractor/Consultant shall procure and maintain during the life of this contract Professional Liability Insurance in an amount of **$1,000,000** per occurrence and annual aggregate. The policy will fully address the Contractor/Consultant's professional services associated with the scope of work contained in this document. The policy will include at least a three year Extended Reporting Provision.

H. Pollution Liability

Contractor/Consultant must procure and maintain Pollution Liability Insurance in an amount not less than **$1,000,000** each occurrence/aggregate. Completed operations coverage shall remain in effect for no less than three (3) years after final completion. This coverage can also be satisfied with an endorsement to the General Liability policy.

I. Performance Bond and Payment Bond

Contractor/Consultant shall furnish a Payment Bond and a Performance Bond to the City in an amount equal to **100 percent of the total contract value** and for the duration of the entire term.

The person executing the Bonds on behalf of the surety shall file with the Bonds a general power of attorney unlimited as to amount and type of bonds covered by such power of attorney, and certified by an official of said surety. **Be a U.S. Treasury Circular 570 listed company.**

Payment Bond

INSTRUCTIONS

1. This form is required for use in connection with the Agreement identified on its face. There shall be no deviation from this form without approval by the City.

2. The full legal name and business address of the Principal shall be inserted in the space designated "Principal" on the face of the form. The bond shall be signed by an authorized person. Where such person is signing in a representative capacity (e.g., an attorney-in-fact), but is not a member of the firm, partnership, or joint venture, or an office of the corporation involved, evidence of this authority must be furnished.

3. Corporation executing the bond as surety must be among those appearing on the U.S. Treasury Department's most current list of approved sureties and must be acting within the amounts and limitations set forth therein.

4. Corporate surety shall be duly authorized by the Commissioner of Insurance of the State of Georgia to transact surety business in the State of Georgia.

5. Do not date this bond. The City will date this bond the same date or later than the date of the Agreement.

6. The Surety shall attach a duly authorized power-of-attorney authorizing signature on its behalf of any attorney-in-fact.

7. Corporations executing the bond shall affix their corporate seals. Individuals shall execute the bond opposite the word "Seal."

8. The name of each person signing this bond shall be typed or printed in the space provided.

Payment Bond

Bond No. _____

"City" City of Atlanta

"Project" **FC-8412, Annual Contract for Sanitary Sewer Repair Services**
"FC No." 8412

"Principal" (Legal Name and Business Address), _____

_____

_____

Type of Organization ("X" one): _____ Individual
_____ Partnership
_____ Joint Venture
_____ Corporation

"Surety:" (Name and Business Address) _____

_____

_____

duly authorized by the Commissioner of Insurance of the State of Georgia to transact surety business in the State of Georgia.

"Agreement:" Agreement between Principal and City, dated _____ day of _____, 20___, regarding performance of Work relative to the Project.

"Penal Sum:"_____

_____($Dollars).

KNOW ALL MEN BY THESE PRESENTS, that we, the Principal and Surety hereto, as named above, are held and firmly bound to the City in the above Penal Sum for the payment of which well and truly to be made we bind ourselves, our heirs, executors, administrators, successors, jointly and severally.

WHEREAS, the Principal and the City entered into the Agreement identified above;

NOW, THEREFORE, the conditions of this obligation are such that if the Principal shall make payment of all Subcontractors and all persons supplying labor, Materials, machinery and Equipment for the performance of said work, this obligation shall be void; otherwise of full force and effect.

And the Surety to this bond, for value received, agrees that no modification, change, extension of time, alteration or addition to the terms of the Agreement or to the Work to be performed thereunder shall in any wise affect its obligation on this bond, and it does hereby waive notice of any such modification, change, extension of time, alteration or addition to the terms of the Agreement or the Work.

DRAFT

It is agreed that this bond is executed pursuant to and in accordance with the provisions of O.C.G.A. Section 36-91-1 *et seq.* and is intended to be and shall be construed to be a bond in compliance with the requirements thereof, though not restricted thereto.

IN WITNESS WHEREOF, the Principal and the Surety have caused these presents to be duly signed and sealed this _____ day of _____, 20___.

PRINCIPAL: _____

_____
President/Vice President (Sign)

_____
President/Vice President (Type or Print)

Attested to by:

_____
Secretary/Assistant Secretary (Seal)

SURETY: _____

By: _____
Attorney-in-Fact (Sign)

_____
Attorney-in-Fact (Type or Print)

APPROVED AS TO FORM

_____
Associate/Assistant City Attorney

APPROVED

_____
City's Chief Financial Officer

DRAFT

Performance Bond

INSTRUCTIONS

1. This form is required for use in connection with the Agreement identified on its face. There shall be no deviation from this form without approval by the City.

2. The full legal name and business address of the Principal shall be inserted in the space designated "Principal" on the face of the form. The bond shall be signed by an authorized person. Where such person is signing in a representative capacity (e.g., an attorney-in-fact), but is not a member of the firm, partnership, or joint venture, or an office of the corporation involved, evidence of this authority must be furnished.

3. Corporation executing the bond as surety must be among those appearing on the U.S. Treasury Department's most current list of approved sureties and must be acting within the amounts and limitations set forth therein.

4. Corporate surety shall be duly authorized by the Commissioner of Insurance of the State of Georgia to transact surety business in the State of Georgia.

5. Do not date this bond. The City will date this bond the same date or later than the date of the Agreement.

6. The Surety shall attach a duly authorized power-of-attorney authorizing signature on its behalf of any attorney-in-fact.

7. Corporations executing the bond shall affix their corporate seals. Individuals shall execute the bond opposite the word "Seal."

8. The name of each person signing this bond shall be typed or printed in the space provided.

Performance Bond

Bond No. _____

"City" City of Atlanta

"Project" **FC-8412, Annual Contract for Sanitary Sewer Repair Services**
"FC No." 8412

"Principal" (Legal Name and Business Address) _____

_____

_____

Type of Organization ("X" one): _____ Individual
_____ Partnership
_____ Joint Venture
_____ Corporation

"Surety:" (Name and Business Address) _____

_____

_____

duly authorized by the Commissioner of Insurance of the State of Georgia to transact surety business in the State of Georgia.

"Agreement:" Agreement between Principal and City, dated _____ day of _____, 20___, regarding performance of Work relative to the Project.

"Penal Sum:" _____

_____($Dollars).

KNOW ALL MEN BY THESE PRESENTS, that we, the Principal and Surety hereto, as named above, are held and firmly bound to the City in the above Penal Sum for the payment of which well and truly to be made we bind ourselves, our heirs, executors, administrators, successors, jointly and severally.

WHEREAS, the Principal and the City entered into the Agreement identified above;

NOW, THEREFORE, the conditions of this obligation are such that if the Principal shall faithfully and fully comply with, perform and fulfill all of the undertakings, covenants, conditions and all other of the terms and conditions of said Agreement, including any and all duly authorized modifications of such Agreement, within the original term of such Agreement and any extensions thereof, which shall include, but not be limited to any obligations created by way of warranties and/or guarantees for workmanship and materials which warranty

DRAFT

and/or guarantee may extend for a period of time of one year beyond completion of said Agreement, this obligation shall be void; otherwise, of full force and effect.

And the Surety to this bond, for value received, agrees that no modification, change, extension of time, alteration or addition to the terms of the Agreement or to the Work to be performed thereunder shall in any wise affect its obligation on this bond, and it does hereby waive notice of any such modification, change, extension of time, alteration or addition to the terms of the Agreement or the Work.

It is agreed that this bond is executed pursuant to and in accordance with the provision of O.C.G.A. Section 13-10-1 and 36-91-1, *et seq.* and is intended to be and shall be construed to be a bond in compliance with the requirements thereof, though not restricted thereto.

IN WITNESS WHEREOF, the Principal and the Surety have caused these presents to be duly signed and sealed this _____ day of _____, 20___.

PRINCIPAL:_____

_____
President/Vice President (Sign)

_____
President/Vice President (Type or Print)

Attested to by:

_____
Secretary/Assistant Secretary (Seal)

SURETY:_____

By: _____
Attorney-in-Fact (Sign)

_____
Attorney-in-Fact (Type or Print)

APPROVED AS TO FORM

_____
Associate/Assistant City Attorney

APPROVED

_____
City's Chief Financial Officer

DRAFT

APPENDIX C

DRAWINGS

FC-8412

SANITARY SEWER REPAIR

ANNUAL

CITY OF ATLANTA

KASIM REED, MAYOR
CITY OF ATLANTA

JO ANN J. MACRINA, P.E. COMMISSIONER
DEPARTMENT OF WATERSHED MANAGEMENT

ADAM L. SMITH, ESQ., CPPB, CHIEF PROCUREMENT OFFICER
DEPARTMENT OF PROCUREMENT

SANITARY SEWER REPAIR ANNUAL CONTRACT A

SHEET NO.	DESCRIPTION	SEWERSHED
G-1	COVER SHEET	
G-2	LIST OF DRAWINGS	
G-3	NOT USED	
G-4	GENERAL NOTES, SYMBOLS AND ABBREVIATIONS	
GC-1	STANDARD DETAILS - 1	
GC-2	STANDARD DETAILS - 2	
GC-3	STANDARD DETAILS - 3	
GC-4	STANDARD DETAILS - 4	
GC-5	STANDARD DETAILS - 5	
EC-1	EROSION CONTROL NOTES	
EC-2	EROSION CONTROL DETAILS	
LP-1	LANDSCAPE AND TREE PROTECTION DETAILS	

GENERAL NOTES

1. OWNER: CITY OF ATLANTA, DEPARTMENT OF WATERSHED MANAGEMENT
   68 MITCHELL STREET, SW
   ATLANTA, GEORGIA 30303
   PHONE: (404) 330-6801
2. ALL CONSTRUCTION MATERIALS AND WORKMANSHIP SHALL CONFORM TO THE PROJECT SPECIFICATIONS AND THE CITY OF ATLANTA STANDARD SPECIFICATIONS. IN THE CASE OF CONFLICTS, THE PROJECT SPECIFICATIONS SHALL GOVERN. THE CONTRACTOR SHALL OBTAIN AND USE ALL APPLICABLE ADDENDA.
3. ALL ITEMS WHICH MUST BE REMOVED DURING CONSTRUCTION, AND ARE NOT SPECIFICALLY SHOWN TO BE PAID FOR OTHERWISE, SHALL BE REMOVED AND PAYMENT WILL BE INCLUDED IN THE UNIT PRICE BID FOR PIPE INSTALLATION. NO CLAIMS WILL BE CONSIDERED FOR EXTRA COMPENSATION.
4. IT SHALL BE THE CONTRACTOR'S RESPONSIBILITY TO CONFORM TO ALL THE REQUIREMENTS OF THE SPECIFICATIONS AS THEY RELATE TO COOPERATION WITH THE UTILITY OWNERS AND THE UTILITY LOCATIONS THAT EXIST ON THE SITE. CONTRACTOR MUST ALSO COMPLY WITH ALL DOT, RR, AND UTILITY COMPANY'S REQUIREMENTS.
5. IT SHALL BE THE CONTRACTOR'S RESPONSIBILITY TO COORDINATE HIS WORK WITH ANY WORK TO BE PERFORMED BY THE UTILITY OWNERS OR OTHERS IN ANY RIGHT-OF-WAY CLEARANCE AND ARRANGE A SCHEDULE OF OPERATIONS THAT WILL ALLOW FOR THE COMPLETION OF THE PROJECT WITHOUT ANY UNDUE DELAY. CONTRACTOR TO NOTIFY UTILITY PROTECTION AGENCY 72 HOURS PRIOR TO START OF WORK, TELEPHONE NUMBER (770)623-4344 OR 1-800-282-7411 OR CALL 811.
6. THE CONTRACTOR WILL NOT BE COMPENSATED FOR ANY DELAY OR DAMAGE CAUSED BY UTILITY FACILITIES, OBSTRUCTION, OR ANY OTHER ITEM NOT BEING REMOVED OR RELOCATED TO CLEAR CONSTRUCTION IN ADVANCE OF HIS WORK.
7. IT SHALL BE THE CONTRACTOR'S RESPONSIBILITY TO KEEP UP WITH "ALL" UPDATED INFORMATION FROM THE UTILITIES PROTECTION CENTER (UPC) FOR ALL UTILITIES.
8. CONSTRUCTION DEWATERING ACTIVITIES SHALL STRICTLY CONFORM TO THE PROVISIONS AND REQUIREMENTS OF SPECIFICATION SECTION 02140.
9. DRAINAGE SYSTEMS (SEWERS, CULVERTS, ETC.) WILL BE MAINTAINED AT ALL TIMES DURING CONSTRUCTION OF THIS PROJECT. WHERE A DRAINAGE STRUCTURE IS DAMAGED FROM HIS WORK, THE CONTRACTOR WILL NOT BE COMPENSATED FOR PERFORMING REPAIRS.
10. ALL DISTURBED UNPAVED AREAS SHALL BE LANDSCAPED AS DESCRIBED IN SPECIFICATION SECTION 02900.
11. ALL CONCRETE SIDEWALK, CURB, AND CONCRETE APPROACH RAMP WHICH ARE REQUIRED TO BE REMOVED TO PERMIT INSTALLATION OF PIPE SHALL BE NEATLY SAW CUT AND RESTORED TO MATCH EXISTING STRUCTURES AND GRADE.
12. THE CONTRACTOR SHALL BE RESPONSIBLE FOR THE PROTECTION OF ALL EXISTING STRUCTURES, UTILITIES, FENCES, SHRUBBERY, AND RETAINING WALLS WHICH ARE NOT TO BE DISTURBED DURING CONSTRUCTION.
13. COSTS ASSOCIATED WITH CONTRACTOR STORAGE, LAY-DOWN, AND PARKING AREAS SHALL BE INCLUDED IN THE RATES FOR WORK.
14. ALL FILL AREAS MUST BE COMPACTED TO MINIMUM 95% STANDARD PROCTOR UNLESS OTHERWISE SPECIFIED OR INDICATED.
15. REMOVAL AND RESETTING OF ANY TYPE OF FENCES, HANDRAILS, OR GUARDRAILS WILL NOT BE MEASURED SEPARATELY FOR PAYMENT. THE COST SHALL BE INCLUDED IN THE RATES FOR WORK. NO CLAIMS WILL BE CONSIDERED FOR EXTRA COMPENSATION.
16. ALL EXCESS MATERIALS WILL BE HAULED OFF BY THE CONTRACTOR SO AS TO RESTORE THE ORIGINAL CONDITION OF THE SITE. SPREADING EXCESS MATERIALS AT THE JOB SITE IS NOT PERMITTED.
17. PAINTING AND COATING WILL NOT BE MEASURED FOR SEPARATE PAYMENT. COST OF PAINTING AND COATING IS TO BE INCLUDED IN THE UNIT PRICE BID FOR OTHER ITEMS.
18. CONTRACTOR'S TRAFFIC CONTROL PLAN MUST BE APPROVED BY AUTHORITY HAVING JURISDICTION BEFORE WORK BEGINS.
19. THE CONTRACTOR SHALL BE RESPONSIBLE FOR RAISING ALL UTILITY CASTINGS SUCH AS MANHOLE COVERS, VALVE BOX COVERS, ETC. PRIOR TO ANY PAVING. THE COVERS SHALL BE FLUSH WITH THE PROPOSED FINISH GRADE AND THE COVERS SHALL BE TILTED AS NECESSARY WITH INCLINED SURFACES TO BE FLUSH WITH THE PROPOSED FINISH GRADE IN ALL DIRECTIONS.
20. ALL LANDSCAPING AND RESTORATION WORK SHALL BE DONE TO THE FULL SATISFACTION OF THE OWNER.
21. THE CONTRACTOR SHALL BE RESPONSIBLE FOR PROVIDING ALL TEMPORARY UTILITIES NEEDED FOR CONSTRUCTION.
22. EROSION AND SEDIMENT CONTROL PROCEDURES SHALL BE FOLLOWED IN A MANNER SO AS TO MINIMIZE EROSION OF THE DISTURBED AREAS AND PREVENT SEDIMENT LEAVING THE SITE. THE CONTRACTOR WILL BE REQUIRED TO INCORPORATE ALL TEMPORARY AND PERMANENT EROSION CONTROL FEATURES INTO THE PROJECT AT THE EARLIEST PRACTICABLE TIME DURING CONSTRUCTION (SEE EROSION CONTROL NOTES ON SHEET EC-1).
23. THE CONTRACTOR SHALL BE RESPONSIBLE FOR THE RELOCATION AND THE REPAIR OF ANY EXISTING SEWER SERVICE CONNECTIONS.
24. POWER POLES ALONG ROUTES OF CONSTRUCTION ARE TO BE SUPPORTED DURING CONSTRUCTION. CONTRACTOR TO COORDINATE WITH RESPONSIBLE UTILITY COMPANIES.
25. PLASTIC SAFETY FENCE SHALL BE INSTALLED AT EDGES OF ALL CONSTRUCTION AERAS.
26. EXCEPT AS NOTED ON BID FORM, THE COST TO PROVIDE ALL TRAFFIC CONTROL ACTIVITIES SHALL BE INCLUDED IN THE RATES OF WORK.
27. ALL ROADWAY AND DRIVEWAY CUTS AND REPAIRS SHALL BE PER DETAILS ON SHEET GC-2.
28. ROUTE CLEARING OPERATIONS SHALL BEGIN NO MORE THAN 7 DAYS BEFORE BEGINNING CONSTRUCTION WORK ON ANY AREA.
29. THE CONTRACTOR SHALL PROTECT AND SUPPORT ALL EXISTING UTILITIES WHERE ENCOUNTERED. METHOD OF SUPPORT SHALL BE SUBMITTED TO THE ENGINEER FOR APPROVAL WHERE PIPE SEPARATION IS LESS THAN 12-INCHES. PERMANENT SUPPORT SHALL BE PROVIDED PER DETAIL 11 ON GC-2.
30. ALL TRENCHING AND BACKFILL SHALL BE IN ACCORDANCE WITH DETAIL 14 ON GC-2 AND DETAIL 17 ON GC-3 AND THE SPECIFICATIONS.

ADDITIONAL CONSTRUCTION NOTES

1. CONSTRUCTION ACTIVITIES MUST CONFORM TO CITY OF ATLANTA'S STANDARDS AND SPECIFICATIONS.
2. TREES SHALL NOT BE PLANTED IN THE PERMANENT EASEMENT AREAS.
3. NEOPRENE COUPLINGS WITH STAINLESS STEEL BANDS AND SHEAR RINGS ARE REQUIRED FOR JOINING DIFFERENT TYPES OF SANITARY SEWER PIPE MATERIALS. COUPLINGS SHALL BE MANUFACTURED BY FERNCO OR APPROVED EQUAL.
4. COMPACTION OF THE BACKFILL OF ALL TRENCHES SHALL BE COMPACTED TO THE DENSITY OF 95% OF THE THEORETICAL MAXIMUM DENSITY UNLESS OTHERWISE SPECIFIED OR INDICATED. BACKFILL MATERIAL SHALL BE FREE FROM ROOTS, STUMPS, OR OTHER FOREIGN DEBRIS, AND SHALL BE PLACED AT OR NEAR OPTIMUM MOISTURE.
5. FIELD VERIFY LOCATION AND INVERT ELEVATIONS OF WASTEWATER PIPE FOR CONNECTION TO EXISTING WASTEWATER SYSTEMS.
6. FOR ALL CONSTRUCTION ALONG AND/OR ACROSS WATERWAY BANKS, PROTECTION AND STABILIZATION AS SHOWN ON DRAWING EC-2 SHALL BE REQUIRED.
7. ALL SILT BARRIERS MUST BE PLACED AS ACCESS IS OBTAINED DURING CLEARING. NO GRADING SHALL BE DONE UNTIL SILT BARRIER INSTALLATION AND DETENTION FACILITIES ARE CONSTRUCTED. SILT BARRIERS TO BE PLACED AS SHOWN AND/OR AS DIRECTED BY PROJECT ENGINEER AND/OR CITY OF ATLANTA INSPECTOR.
8. IF APPLICABLE, COMPLY WITH TRAFFIC CONTROL REQUIREMENTS AS FOLLOWS, SEE SPECIFICATION SECTION 01500 - 1.11 FOR ADDITIONAL REQUIREMENTS:
   A. SIGNING. STRIPING, MARKING, AND HIGH LEVEL WARNING DEVICES TO BE PLACED AS SHOWN AND/OR DIRECTED BY THE CITY OF ATLANTA TRAFFIC ENGINEER AND/OR INSPECTOR. THIS TRAFFIC CONTROL PLAN IS SUBJECT TO CHANGE BY THE ENGINEER.
   B. WARNING DEVICES SHALL BE PLACED PRIOR TO THE COMMENCEMENT OF ANY ROAD IMPROVEMENT WORK AND SHALL REMAIN IN PLACE UNTIL THE CONCLUSION OF ALL SIGNING AND STRIPING WORK.
   C. ALL WARNING DEVICES SHALL INCLUDE WARNING LIGHTS ON EVERY OTHER DEVICE, AND SHALL CONFORM WITH THE MANUAL ON UNIFORM TRAFFIC CONTROL DEVICES (MUTCD) STANDARDS AND CITY OF ATLANTA FOR COLOR, SIZE, REFLECTIVITY, HEIGHT, AND PLACEMENT.
   D. SPACING OF WARNING DEVICES IN FEET SHALL BE EQUAL TO THE POSTED SPEED OF THE ROAD IN MPH. (i.e., 30 FOOT SPACING FOR 30 MPH SPEED LIMIT)
   E. ALL SIGNS SHALL CONFORM WITH THE MANUAL ON UNIFORM TRAFFIC CONTROL DEVICES (MUTCD) STANDARDS AND CITY OF ATLANTA FOR COLOR, SIZE, REFLECTIVITY, HEIGHT, AND PLACEMENT.
   F. STRIPING (WHITE & YELLOW) AND ARROW MARKINGS SHALL BE APPLIED USING CITY OF ATLANTA OR GEORGIA DOT STANDARD THERMOPLASTIC.
   G. WHEN NECESSARY, EXISTING STRIPING SHALL BE REMOVED BY GRINDING, UNLESS SPECIFIED BY THE CITY OF ATLANTA TRAFFIC ENGINEER.
   H. ALL SIGNS MUST BE INSTALLED CONCURRENTLY WITH THE PERFORMANCE OF THE STRIPING WORK.
   I. CONTACT THE CITY OF ATLANTA TRAFFIC ENGINEER (404-330-6501) ONE WEEK PRIOR TO COMMENCEMENT OF ANY STRIPING WORK.
   J. COORDINATE ROAD CLOSINGS OR DETOURS WITH GEORGIA DOT OR DEPARTMENT OF PUBLIC WORKS TRAFFIC SECTION, AND ANY CITY OF ATLANTA OR OTHER EMERGENCY SERVICES THAT ARE REQUIRED.
9. CONTRACTOR SHALL ONLY USE PERPENDICULAR CROSSINGS AT STREAMS AND CREEKS UNLESS AN ENCROACHMENT HAS BEEN INDICATED ON PLANS.
10. CONTRACTOR SHALL NOT CLEAR BEYOND CONSTRUCTION LIMITS SPECIFIED.
11. AREAS DISTURBED DURING CONSTRUCTION THAT WILL RECEIVE NORMAL RUNOFF AND STREAM WATER RELATED FLOWS SHALL BE RIP-RAPPED OR OTHERWISE STABILIZED AS DIRECTED BY ENGINEER.
12. THE ISSUANCE OF A LAND DISTURBANCE PERMIT DOES NOT IN ANY WAY SUGGEST THAT ALL OTHER REQUIREMENTS FOR THE LEGAL OR APPROPRATE OPERATIONS FOR THIS CONSTRUCTION ACTIVITY, WHICH MAY REQUIRE ADDITIONAL PERMITTING, HAVE BEEN MET. THE ONUS IS ON THE CONTRACTOR TO DISCOVER WHAT ADDITIONAL PERMITTING OR APPROVALS MAY BE NECESSARY TO OPERATE IN AN APPROPRATE MANNER. PLAN APPROVAL OR PERMIT ISSUANCE DOES NOT ABSOLVE THE APPLICANT FROM COMPLYING WITH ALL APPLICABLE LAWS, POLICIES, STANDARDS, OR OTHER PERMITS WHICH MAY BE REQUIRED FOR THIS PROJECT.

MANHOLE NOTES

1. BEFORE ORDERING NEW MANHOLES CONTRACTOR SHALL PERFORM A SURVEY ON EXISTING MANHOLES. CONTRACTOR SHALL PREPARE AN INVENTORY FROM THIS SURVEY SHOWING ALL COMPONENTS OF EXISTING MANHOLES INCLUDING DIMENSIONS AND SIZES. THIS INVENTORY SHALL BE THE BASIS FROM WHICH THE CONTRACTOR WILL ORDER MATERIAL. THE INVENTORY AND MATERIAL SCHEDULE SHALL BE SUBMITTED WITH THE SHOP DRAWINGS TO THE ENGINEER FOR REVIEW. HOWEVER, IT IS THE RESPONSIBILITY OF THE CONTRACTOR TO ORDER THE CORRECT MATERIAL SIZES AND LENGTHS AND NOT THE ENGINEER.
2. CONTRACTOR SHALL SELECT MANHOLE RISER AND BASES THAT MATCH THE EXISTING CONES SO JOINTS SEAL PROPERLY.

FLOWMETER NOTES

1. SEVERAL FLOW METERS ARE INSTALLED IN MANHOLES WHERE CONSTRUCTION WORK WILL BE DONE. WHEN THE CONTRACTOR ENCOUNTERS FLOW METERS WHERE HE IS REQUIRED TO DO WORK, HE WILL NOTIFY THE ENGINEER AT LEAST TWO DAYS PRIOR TO REQUIRING THE METER TO BE REMOVED. REMOVAL WILL BE DONE BY OTHERS. CONTRACTOR WILL NOT ATTEMPT REMOVAL OF FLOW METERS.

SYMBOLS

SECTION IDENTIFICATION

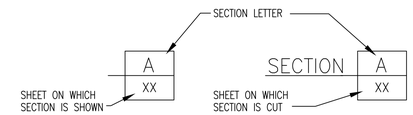

DETAIL IDENTIFICATION

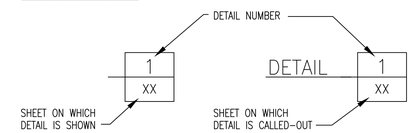

STANDARD ABBREVIATIONS

APPROX.	APPROXIMATE	LF	LINEAR FOOT
ASPH	ASPHALT		
AVE	AVENUE	MAX	MAXIMUM
		MH	MANHOLE
BLDG	BUILDING	MIN	MINIMUM
CB	CATCH BASIN	N	NORTH
CI	CAST IRON	NTS	NOT TO SCALE
CL	CENTER LINE		
CONC	CONCRETE	OC	ON CENTER
CMP	CORRUGATED METAL PIPE	OD	OUTSIDE DIAMETER
CP	CONCRETE PIPE		
CULV	CULVERT	PP	POWER POLE
		PVC	POLYVINYL CHLORIDE
DET	DETAIL		
DI	DUCTILE IRON	R/W	RIGHT OF WAY
DIA	DIAMETER	RCP	REINFORCED CONCRETE PIPE
DIP	DUCTILE IRON PIPE	RD	ROAD
DMH	DROP MANHOLE	RR	RAILROAD
DWG	DRAWING		
		SPEC	SPECIFICATION
E	EAST	STA	STATION
EA	EACH		
EL or ELEV	ELEVATION	TYP	TYPICAL
EOP	EDGE OF PAVEMENT		
EXIST	EXISTING	UG	UNDERGROUND
FH	FIRE HYDRANT	VCP	VITRIFIED CLAY PIPE
		VF	VERTICAL FOOT
GPS	GROUND POSITIONING SYSTEM		
HDPE	HIGH DENSITY POLYETHYLENE	WD	WOOD
HW	HEAD WALL		
ID	INSIDE DIAMETER		
INV	INVERT		
IPF	IRON PIN FOUND		

PIPELINE INSTALLATION AND BEDDING NOTES

1. ROCK EXCAVATION WILL BE MEASURED SEPARATELY FOR PAYMENT.
2. UNLESS OTHERWISE REQUIRED, THE WORK OF OPEN CUT INSTALLATION OF PIPE LINES SHALL BE DONE IN OPEN TRENCHES AND IN A MANNER TO PROTECT PIPE LINES, SEWERS, OR STRUCTURES FROM UNUSUAL STRESSES.
3. IN NO CASE SHALL THE DEFLECTION IN THE PIPELINE JOINTS EXCEED 75% OF THE MAXIMUM DEFLECTION RECOMMENDED BY THE PIPE MANUFACTURER UNLESS APPROVED IN WRITING BY THE ENGINEER.

WETLAND PRESERVATION NOTES

1. CONTRACTOR SHALL MINIMIZE CLEARED AREA WITHIN WETLAND.
2. CONTRACTOR MUST RETURN ALL WORK AREAS TO PRE CONSTRUCTION CONTOURS. EXCESS MATERIAL MUST BE REMOVED UPON COMPLETION OF WORK.
3. ANY EXPOSED SLOPES AND STREAM BANKS MUST BE STABILIZED IMMEDIATELY UPON COMPLETION OF PIPELINE(S).

OPEN CUT REPLACEMENT (OCR)/HORIZONTAL DIRECTIONAL DRILLING (HDD)/ CURED-IN-PLACE PIPE (CIPP)/ PIPE BURSTING (PB) NOTES

1. CONTRACTOR SHALL BE RESPONSIBLE FOR MAINTAINING UNINTERRUPTED SEWER SERVICES BY USING BYPASS PUMPING, TANKERING, FLOW DIVERSION OR OTHER APPLICABLE METHODS APPROVED BY THE ENGINEER SUCH THAT SPILLAGES/OVERFLOWS DO NOT OCCUR.
2. CONTRACTOR SHALL RESTRICT ALL OCR/HDD/CIPP/PB CONSTRUCTION & CONSTRUCTION RELATED ACTIVITIES WITHIN EASEMENTS, RIGHT OF WAY OR TEMPORARY WORKING AREAS CONTRACTOR HAS LEGALLY OBTAINED.
3. CONTRACTOR SHALL STRING HDPE PIPE SO AS TO MINIMIZE DAMAGE TO TREES, LANDSCAPE AND ALL OTHER SIMILAR FEATURES.
4. CONTRACTOR IS RESPONSIBLE FOR RECTIFING ALL OR ANY DAMAGE CREATED BY OCR/HDD/CIPP OR PB RELATED CONSTRUCTION ACTIVITIES.
5. ENGINEER'S DISCRETION WILL BE EXERCISED TO RELOCATE SANITARY SEWER PIPING AROUND BUILDINGS AND/OR TERMINATE OCR/HDD/CIPP OR PB RELATED CONSTRUCTION ACTIVITIES PRIOR TO BUILDINGS WITH A TERMINATING ACCESS /MAINTENANCE STRUCTURE.
6. CONTRACTOR SHALL CONFIRM POSITION OF MAINLINES AND SERVICE CONNECTIONS TO SEWER RELATIVE TO BUILDINGS.
7. CONTRACTOR SHALL CONFIRM LOCATION OF BUILDING SEWER BY DYE OR SMOKE TESTING SERVICE CONNECTIONS AND/OR MAIN SEWER. CONTRACTOR MAY BE REQUIRED AND SHALL ALLOW FOR COORDINATION WITH DYE OR SMOKE TESTING SERVICES PERFORMED BY SEPARATE CONTRACTOR TO THE CITY.
8. WHERE PIPELINES ARE UNDER OR LOCATED CLOSE TO BUILDINGS OR OTHER STRUCTURES, INCLUDING BUT NOT LIMITED TO SWIMMING POOLS, OCR/HDD/CIPP OR PB ACTIVITIES WILL ONLY BE ALLOWED TO PROCEED FOLLOWING SPECIFIC APPROVAL BY THE ENGINEER.
9. UNLESS OTHERWISE DIRECTED BY THE ENGINEER FOR PIPE BURSTING OF PIPES LESS THAN 18-INCH DIAMETER, FOUNDATIONS WITHIN 25-FEET OF THE PIPE BEING BURST SHALL RECEIVE FULL SEISMOGRAPHIC MONITORING INCLUDING THE TWO MOST ADJACENT CORNERS OF BUILDING(S) IN PROXIMITY. NO BURSTING WILL BE ALLOWED UNTIL THE MONITORING INSTRUMENTS ARE IN PLACE AND THE MONITORING PLAN HAS BEEN ACCEPTED BY THE ENGINEER.
10. UNLESS OTHERWISE DIRECTED BY THE ENGINEER FOR PIPE BURSTING OF PIPES GREATER THAN OR EQUAL TO 18-INCH DIAMETER, FOUNDATIONS WITHIN 50-FEET OF THE PIPE BEING BURST SHALL RECEIVE FULL SEISMOGRAPHIC MONITORING INCLUDING THE TWO MOST ADJACENT CORNERS OF THE BUILDING(S) IN PROXIMITY. NO BURSTING WILL BE ALLOWED UNTIL THE MONITORING INSTRUMENTS ARE IN PLACE AND THE MONITORING PLAN HAS BEEN ACCEPTED BY THE ENGINEER.
11. IF COVER TO HDPE PIPE IS LESS THAN FOUR FEET, THE CONTRACTOR MAY BE REQUIRED TO INSTALL ANTI-FLOTATION COLLARS. ENGINEER WILL DETERMINE IF FLOTATION COLLARS.
12. CONTRACTOR IS TO INSTALL CLEANOUTS ON ALL LATERAL SERVICES BEING RENEWED. CLEANOUTS TO BE CONSTRUCTED PER DETAIL 25A ON GC-4 AND LOCATED IMMEDIATELY INSIDE THE EASEMENT OR ROW BOUNDARY.

SURVEYING NOTES

1. CONTRACTOR IS TO MAKE EVERY EFFORT TO PRESERVE ANY SURVEY MONUMENTS OR BENCH MARKS WHICH EXIST ON THE PROJECT AT THE TIME OF CONTRACT AWARD. THE CONTRACTOR SHALL FURNISH PERSONNEL FULLY QUALIFIED AND CAPABLE OF STAKING THE PROPOSED PIPELINE ALIGNMENT SHOWN ON THE DRAWINGS. ANY SURVEY MARKERS DISTURBED BY THE CONTRACTOR SHALL BE RESTORED BY A QUALIFIED SURVEYOR WITH ALL COST OF RESTORATION BORNE BY THE CONTRACTOR.
2. PROPERTY LINE LOCATIONS ARE APPROXIMATE AND LAND OWNERS TAKEN FROM CITY OF ATLANTA RECORDS.

REV	DATE	BY	DESCRIPTION
	04/30/13		General Notes #5
	04/30/13		General Notes #7

SCALE: N.T.S.

WARNING: IF THIS BAR DOES NOT EQUAL 1" THEN DRAWING IS NOT TO SCALE

DESIGNED
DRAWN
CHECKED

CLEAN WATER ATLANTA — drinking water, stormwater, wastewater

CITY OF ATLANTA

SEWER REHABILITATION

GENERAL NOTES, SYMBOLS, AND ABBREVIATIONS

SHEET G-4

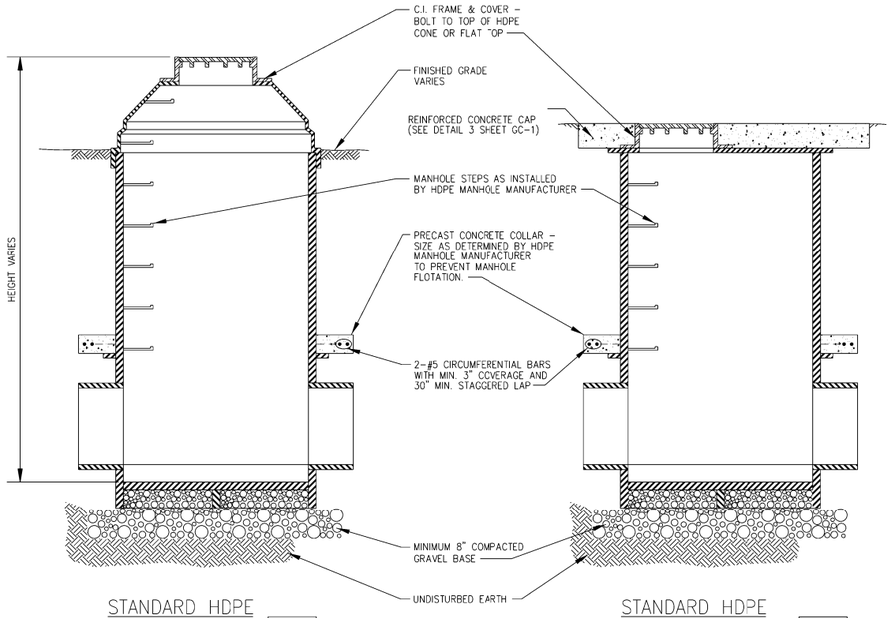

STANDARD HDPE CONE MANHOLE | 1 | GC-1
N.T.S.

STANDARD HDPE FLAT TOP MANHOLE | 2 | GC-1
N.T.S.

NOTES:

1. HEIGHT OF MANHOLE SHALL BE FIELD VERIFIED PRIOR TO ORDERING. CONTRACTOR SHALL VERIFY TOP OF RIM ELEVATION WITH ACTUAL FIELD CONDITIONS.
2. SHOP DRAWING SUBMITTAL SHALL INCLUDE SPECIFICATIONS OF MANHOLES, ALL DIMENSIONS (INCLUDING HEIGHT), CONCRETE CAP COLLAR WITH DESIGN CALCULATIONS AND ALL APPURTENANCES.
3. WHERE HDPE MANHOLES ARE SUBJECT TO VEHICULAR TRAFFIC, INSTALL REINFORCED CONCRETE CAP TO DISPERSE LIVE LOAD INTO SOIL PER MANUFACTURER'S RECOMMENDATIONS.
4. PROVIDE PRE-FABRICATED STEPS IN MANHOLE CONFORMING TO OSHA DIMENSIONAL REQUIREMENTS.

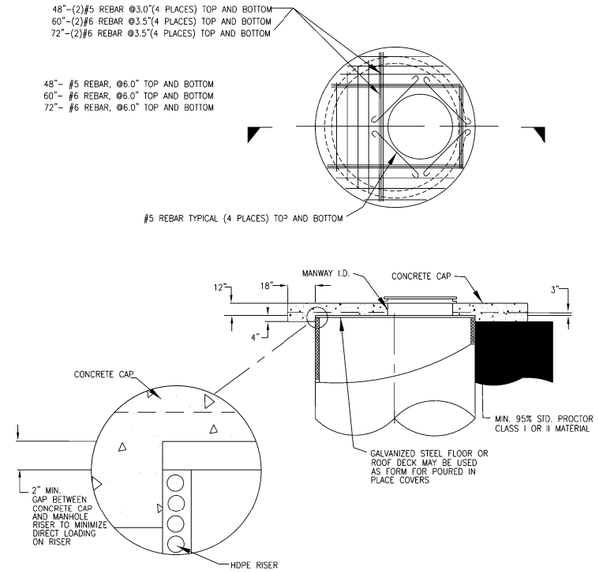

NOTES:

1. USE CONCRETE CAP WITH HDPE FLAT TOP MANHOLE SUBJECT TO VEHICULAR TRAFFIC.
2. CAPS MAY BE PRE-CAST OR POURED-IN-PLACE.
3. WHEN POURING CAPS IN PLACE, DETERMINE WHETHER A FORM IS REQUIRED TO SUPPORT THE WEIGHT OF THE WET CONCRETE TO PREVENT EXCESSIVE DEFLECTION OF THE TOP OF THE MANHOLE.

REINFORCED CONCRETE MANHOLE CAP | 3 | GC-1
NTS

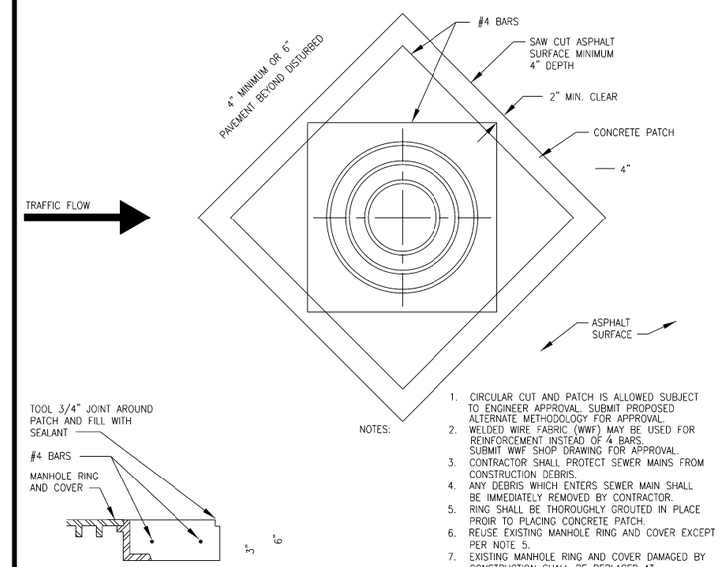

NOTES:

1. CIRCULAR CUT AND PATCH IS ALLOWED SUBJECT TO ENGINEER APPROVAL. SUBMIT PROPOSED ALTERNATE METHODOLOGY FOR APPROVAL.
2. WELDED WIRE FABRIC (WWF) MAY BE USED FOR REINFORCEMENT INSTEAD OF #4 BARS. SUBMIT WWF SHOP DRAWING FOR APPROVAL.
3. CONTRACTOR SHALL PROTECT SEWER MAINS FROM CONSTRUCTION DEBRIS.
4. ANY DEBRIS WHICH ENTERS SEWER MAIN SHALL BE IMMEDIATELY REMOVED BY CONTRACTOR.
5. RING SHALL BE THOROUGHLY GROUTED IN PLACE PRIOR TO PLACING CONCRETE PATCH.
6. REUSE EXISTING MANHOLE RING AND COVER EXCEPT PER NOTE 5.
7. EXISTING MANHOLE RING AND COVER DAMAGED BY CONSTRUCTION SHALL BE REPLACED AT CONTRACTOR'S EXPENSE WITH PROPER RING AND COVER LABLED "SEWER".
8. PROVIDE CONCRETE PIGMENT COLOR TO MATCH EXISTING PAVEMENT CONFORMING TO ASTM C979 STANDARD SPECIFICATION FOR PIGMENTS FOR INTEGRALLY COLORED CONCRETE.

PAVEMENT PATCH FOR MANHOLE CONSTRUCTION SUBJECT TO VEHICULAR TRAFFIC | 4 | GC-1
N.T.S.

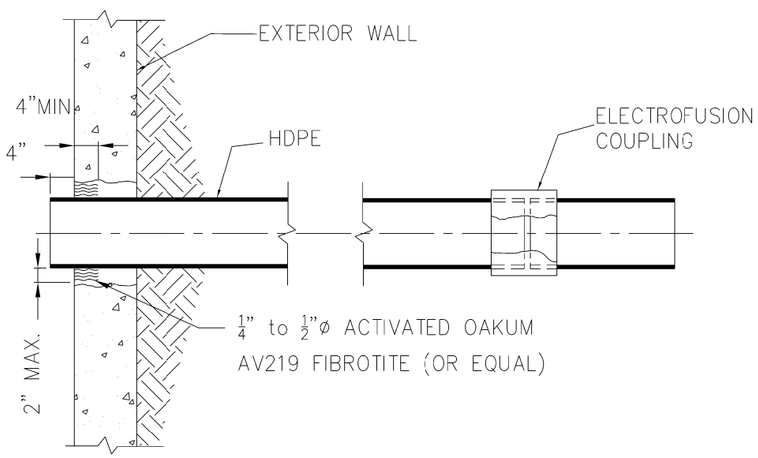

EGP-PIPE TO MANHOLE CONNECTION | 5 | GC-1
N.T.S.

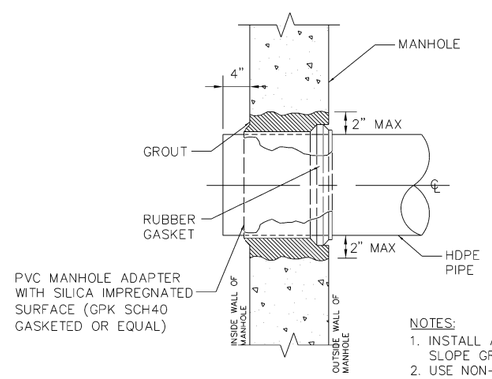

NOTES:

1. INSTALL ADAPTER AT PIPE SLOPE GRADIENT.
2. USE NON-SHRINK NON-METALLIC GROUT.

HDPE-PIPE TO MANHOLE CONNECTION | 6 | GC-1
N.T.S.

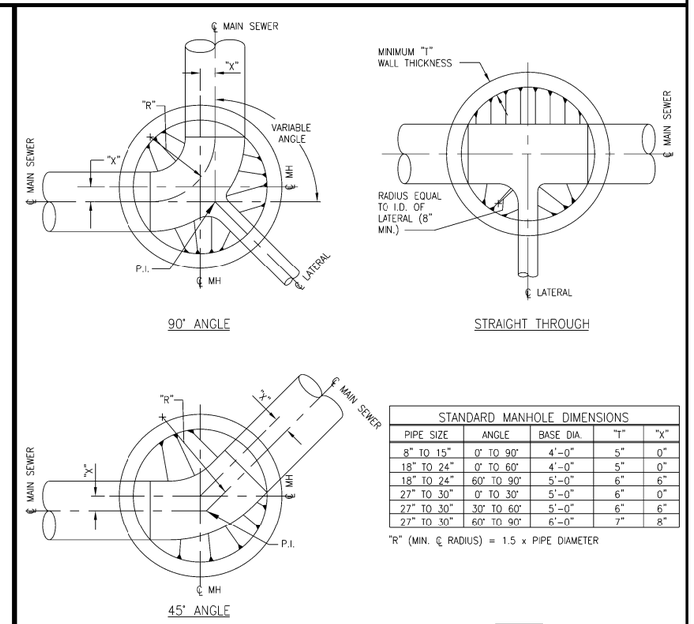

STANDARD MANHOLE DIMENSIONS

PIPE SIZE	ANGLE	BASE DIA.	"T"	"X"
8" TO 15"	0° TO 90°	4'-0"	5"	0"
18" TO 24"	0° TO 60°	4'-0"	5"	0"
18" TO 24"	60° TO 90°	5'-0"	6"	6"
27" TO 30"	0° TO 30°	5'-0"	6"	0"
27" TO 30"	30° TO 60°	5'-0"	6"	6"
27" TO 30"	60° TO 90°	6'-0"	7"	8"

"R" (MIN. ℄ RADIUS) = 1.5 x PIPE DIAMETER

TYPICAL MANHOLE INVERT PLANS | 7 | GC-1
N.T.S.

REV	DATE	BY	DESCRIPTION
2	2-9-09	EW	REVISED DETAILS 3-6
1	1-27-09	EW	MODIFIED DETAIL 5

SCALE: N.T.S.

WARNING: IF THIS BAR DOES NOT EQUAL 1" THEN DRAWING IS NOT TO SCALE

DESIGNED ____
DRAWN ____
CHECKED ____

CLEAN WATER ATLANTA — drinking water, stormwater, wastewater

CITY OF ATLANTA

SEWER REHABILITATION

SUPPLEMENTAL DETAILS – 1

SHEET GC-1

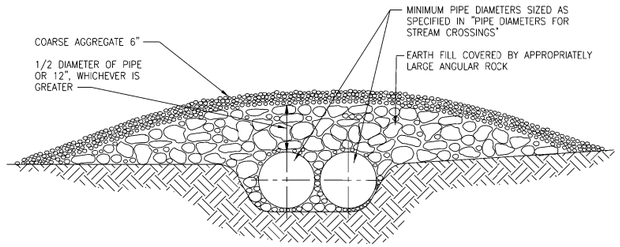

ELEVATION

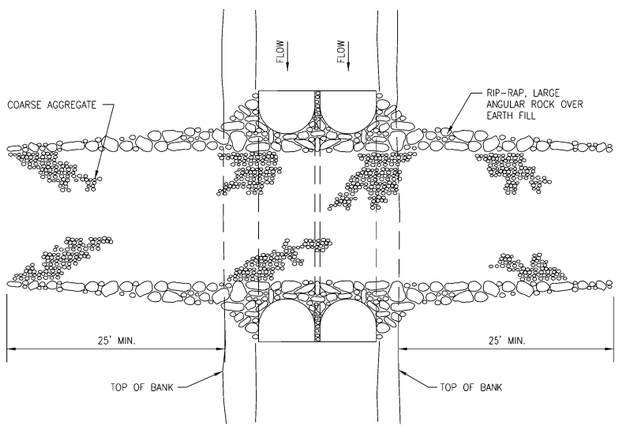

PLAN

Sr TYPICAL TEMPORARY STREAM CROSSING | 8 / GC-2

NTS

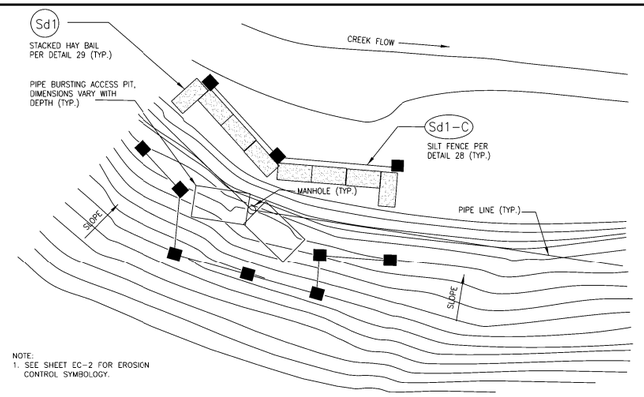

NOTE:
1. SEE SHEET EC-2 FOR EROSION CONTROL SYMBOLOGY.

TYPICAL PIPEBURSTING ACCESS PIT EROSION PROTECTION | 9 / GC-2

N.T.S.

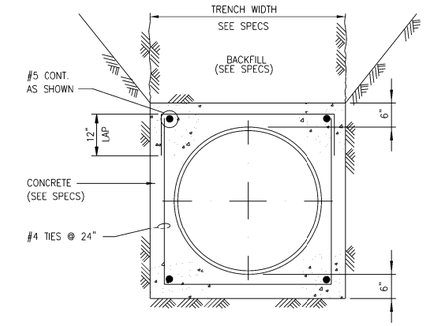

CONCRETE ENCASEMENT | 10 / GC-2

NTS

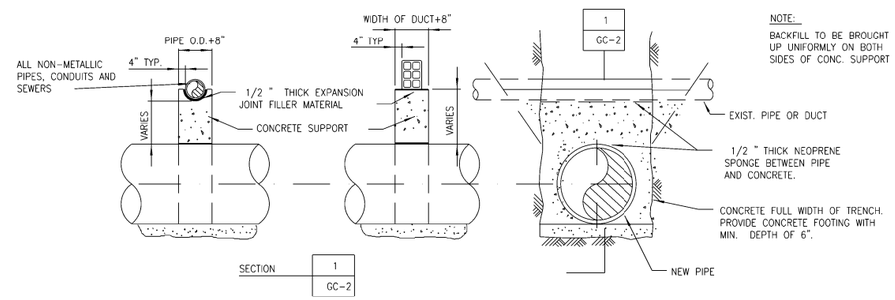

NOTE:
BACKFILL TO BE BROUGHT UP UNIFORMLY ON BOTH SIDES OF CONC. SUPPORT

NOTES:
1. UNDERGROUND UTILITY SUPPORTS ARE TO BE PROVIDED WHEN MINIMUM CLEARANCE OF 12 INCHES CANNOT BE PROVIDED.
2. EXISTING PIPE OR DUCT SHALL BE FIRMLY SUPPORTED DURING INSTALLATION OF NEW PIPE AND SUPPORT.

UNDERGROUND UTILITY SUPPORT | 11 / GC-2

NOT TO SCALE

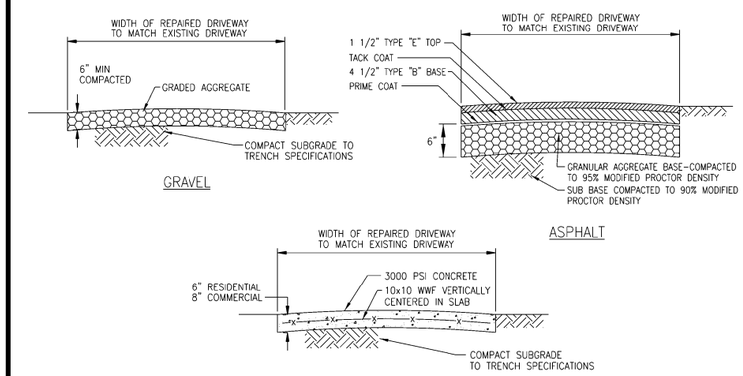

TYPICAL DRIVEWAY REPAIR | 12 / GC-2

N.T.S.

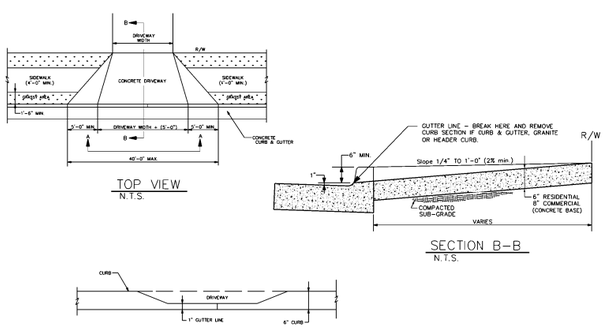

NOTES:
1. SIDEWALK TO BE SCRIBED WITH TRANSVERSE CONTROL JOINTS IN SQUARES EQUAL TO SIDEWALK WIDTH BUT NOT TO EXCEED 10 FEET.
2. CONCRETE SHALL BE TYPE B 3,000 P.S.I. MIN. STRENGTH.
3. INSTALL TRANSVERSE EXPANSION JOINTS NO MORE THAN 100 FEET APART.
4. PREFORMED BITUMINOUS EXPANSION MATERIAL SHALL BE PLACED BETWEEN ALL FIXED OBJECTS (EXCEPT CURB) AND THE NEW CONCRETE SIDEWALK.
5. ALL CONCRETE WORK SHALL BE PER CITY OF ATLANTA STANDARD SPECIFICATIONS FOR CONSTRUCTION.
6. ¼ INCH TOOLED JOINT BETWEEN CURB AND SIDEWALK.

TYPICAL DRIVEWAY AND SIDEWALK | 13 / GC-2

N.T.S.

A. FLEXIBLE PIPE REFERS TO ALL PLASTIC PIPES.
B. TYPICAL TRENCH SECTIONS (I, II and III) ARE TO BE USED ONLY WHERE STABLE, COMPACT SOIL CONDITIONS EXIST. IF BOULDER OR LARGE OBSTRUCTIONS WOULD BE ENCOUNTERED, TRENCH SECTIONS MAY BE DEEPER OR WIDER THAN SHOWN. THE ENGINEER SHOULD BE ADVISED SHOULD THIS OCCUR.
C. THE NEED FOR PROTECTIVE SYSTEMS, AND EXCAVATION SLOPES SHALL BE DETERMINED CONSIDERING APPLICABLE LOCAL, STATE AND FEDERAL (OSHA) SAFETY STANDARDS AND REGULATIONS AND GEOTECHNICAL CONSULTANTS' RECOMMENDATIONS.
D. PROTECTIVE SYSTEMS SHALL BE DESIGNED AND BUILT IN ACCORDANCE WITH THE APPLICABLE LOCAL, STATE AND FEDERAL (OSHA) SAFETY STANDARDS AND REGULATIONS.
E. SUPPORTING DOCUMENTATION SHALL BE SUBMITTED TO THE ENGINEER REGARDING PIPE DESIGN AND COMPLIANCE WITH APPLICABLE LOCAL, STATE AND FEDERAL (OSHA) SAFETY STANDARDS.
F. UNSUPPORTED VERTICAL AND/OR SLOPING TRENCH WALL SLOPES SHALL NOT BE STEEPER THAN ALLOWED BY APPLICABLE LOCAL, STATE AND FEDERAL (OSHA) SAFETY STANDARDS AND REGULATIONS, UNLESS SUPPORTING DOCUMENTATION IS SUBMITTED, ACCORDING TO AFOREMENTIONED SAFETY STANDARDS.
G. TRENCH SECTIONS OTHER THAN THE TYPICAL SECTIONS SHOWN MAY BE UTILIZED PROVIDED THEY COMPLY WITH APPLICABLE LOCAL, STATE AND FEDERAL (OSHA) SAFETY STANDARDS AND REGULATIONS. DOCUMENTATION SUPPORTING THIS COMPLIANCE AND PIPE DESIGN CALCULATIONS SHALL BE SUBMITTED TO THE ENGINEER.
H. IF OVER-EXCAVATION DUE TO POOR FOUNDATION MATERIAL IS ORDERED BY THE ENGINEER, THE BACKFILL MATERIAL SHALL BE ACCORDING TO THE EARTHWORK SECTION OF THE SPECIFICATIONS ARTICLE ENTITLED, "USE OF FILL, BACKFILL AND EMBANKMENT MATERIAL TYPES."
I. IF DURING CONSTRUCTION, THE WATER TABLE WILL BE DISCOVERED TO BE ABOVE THE TRENCH BOTTOM, THE ENGINEER SHALL BE NOTIFIED, AND APPROPRIATE DEWATERING SHALL BE IMPLEMENTED TO LOWER THE WATER LEVEL BELOW THE TRENCH BOTTOM.THE BACKFILL MATERIAL SHALL BE ACCORDING TO THE EARTHWORK SECTIONS OF THE SPECIFICATIONS, OR AS ORDERED BY THE ENGINEER.

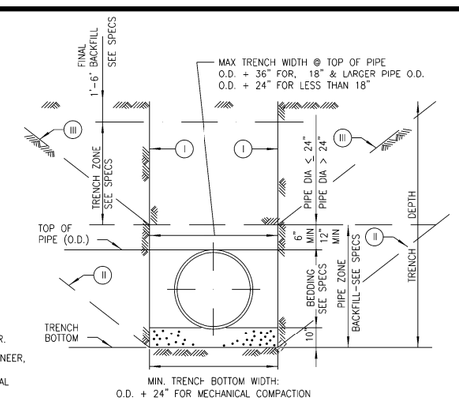

TRENCH SECTION - FLEXIBLE PIPE | 14 / GC-2

NOT TO SCALE

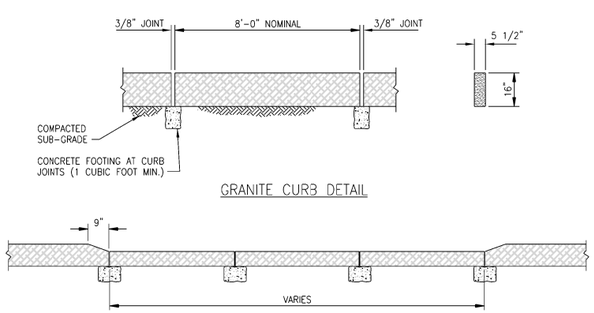

NOTE:
1. THIS DETAIL APPLIES TO ALL REPLACEMENT OF GRANITE CURB NECESSARY DUE TO CONTRACTORS CONSTRUCTION ACTIVITIES.

TYPICAL GRANITE CURB DETAILS | 15 / GC-2

N.T.S.

REV	DATE	BY	DESCRIPTION
2	2-9-09	EW	REVISED DETAIL 9
1	1-27-09	EW	DETAIL 13 MODIFIED

SCALE: N.T.S.

WARNING: IF THIS BAR DOES NOT EQUAL 1" THEN DRAWING IS NOT TO SCALE

DESIGNED ____
DRAWN ____
CHECKED ____

CLEAN WATER ATLANTA — awaking water, stormwater, wastewater

CITY OF ATLANTA

SEWER REHABILITATION

SUPPLEMENTAL DETAILS - 2

SHEET GC-2

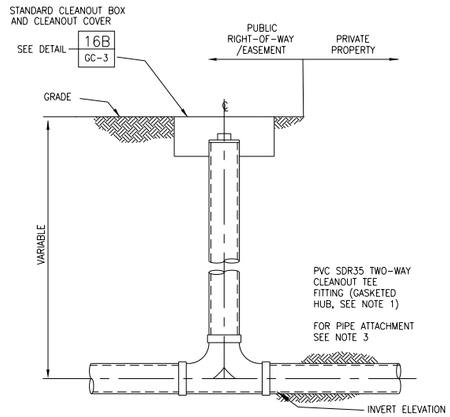

NOTES:

1. PIPE AND FITTINGS SHALL MEET REQUIREMENTS OF SPECIFICATION SECTION 02730 SEWERS AND ACCESSORIES.
2. MATCH INVERT OF EXISTING PIPELINE.
3. CONNECT CLEANOUT TO ADJACENT PIPE USING FERNCO COUPLING (OR APPROVED EQUAL).

CLEANOUT DETAIL 16A GC-3

N.T.S

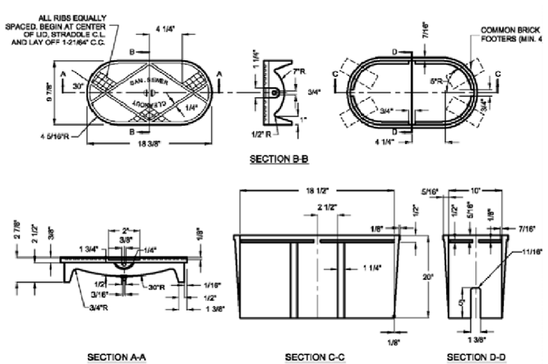

GENERAL NOTES:

1. UNLESS NOTED OTHERWISE, CAST IRON SHALL CONFORM TO A.S.T.M. SPECIFICATION A48 LATEST REVISION FOR CLASS 20 GREY IRON CASTINGS.
2. CASTINGS SHALL BE TRUE AND FREE OF HOLES. THEY SHALL BE CLEANED ACCORDING TO GOOD FOUNDRY PRACTICE, CHIPPED AND GROUND AS NEEDED TO REMOVE FINS AND ROUGH PLACES
3. FINISHED CASTINGS SHALL BE COASTED INSIDE AND OUTSIDE WITH COAL TAR PITCH VARNISH AS INDICATED IN A.W.W.A. SPECIFICATIONS C110–LATEST REVISION. COATING MAY BE APPLIED COLD AND SHALL BE SMOOTH, GLOSSY, NOT BRITTLE WHEN COLD, NOT STICKY WHEN EXPOSED TO THE SUN, AND SHALL ADHERE TO THE METAL AT ALL TEMPERATURES.
4. WHEN COATING IS COMPLETE, LID SHALL FIT SNUGLY WITHOUT ROCKING.

CLEANOUT COVER DETAIL 16B GC-3

N.T.S.

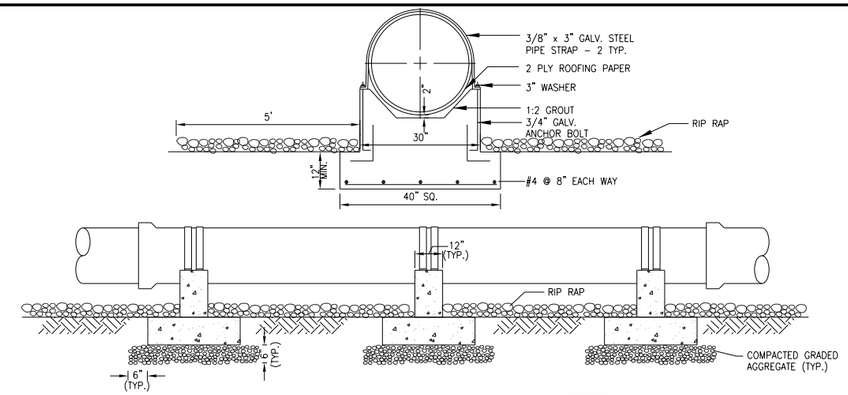

NOTE:

1. CONCRETE PIER SPACING AS REQUIRED FOR PIPE MATERIAL AND DIAMETER.

CONCRETE PIER DETAIL IN LAKE 18 GC-3

NTS

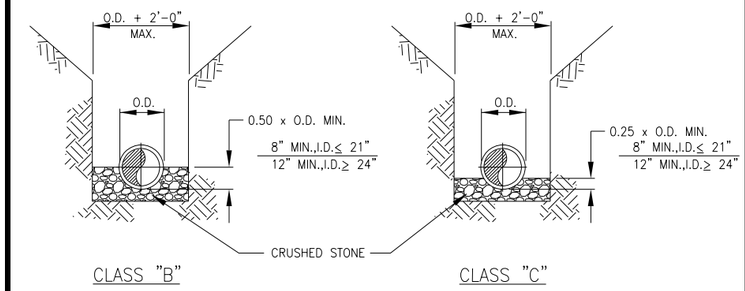

NOTES:

1. BEDDING SHALL BE CLASS "B" IN PAVEMENT.
2. BEDDING SHALL BE CLASS "C" OTHERWISE.
3. INCLUDES EXCAVATION AND TRENCHES IN ROCK.
4. RIGID PIPE REFERS TO ALL REINFORCED CONCRETE PIPES.

TRENCH SECTION – RIGID PIPE 17 GC-3

NTS

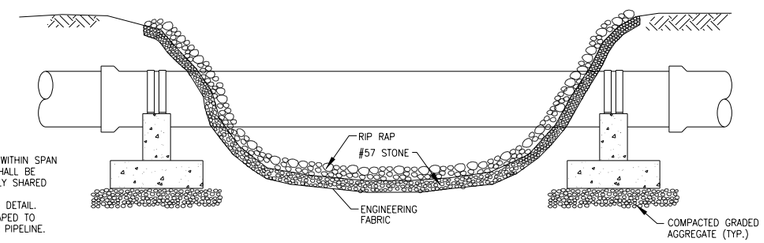

NOTES FOR 19A, B & C:

1. PIPE MATERIAL SHALL BE DIP.
2. JOINTS SHALL NOT BE LOCATED WITHIN SPAN EXPOSED OVER CREEK. PIPE SHALL BE CENTERED SO JOINTS ARE EVENLY SHARED EITHER SIDE OF BANK.
3. RIP RAP SHALL BE APPLIED PER DETAIL.
4. CREEK BOTTOM SHALL BE RESHAPED TO MAXIMIZE FLOW CAPACITY UNDER PIPELINE.

TYPICAL CONCRETE PIER DETAIL FOR AERIAL CREEK CROSSING 19A GC-3

NTS

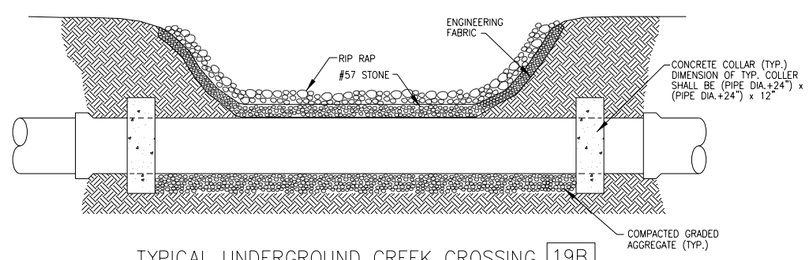

TYPICAL UNDERGROUND CREEK CROSSING 19B GC-3

NTS

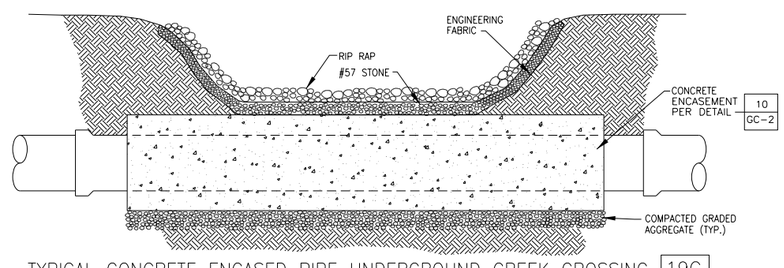

TYPICAL CONCRETE ENCASED PIPE UNDERGROUND CREEK CROSSING 19C GC-3

N.T.S.

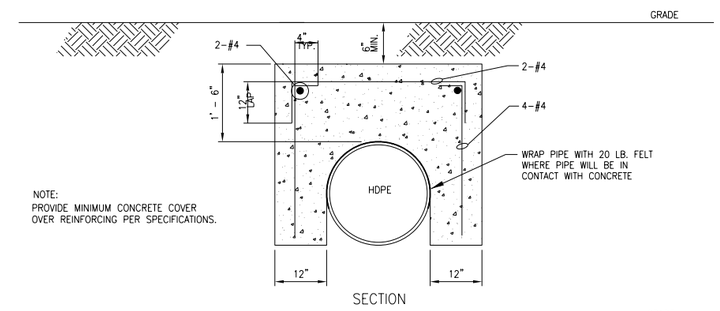

NOTE:
PROVIDE MINIMUM CONCRETE COVER OVER REINFORCING PER SPECIFICATIONS.

SECTION

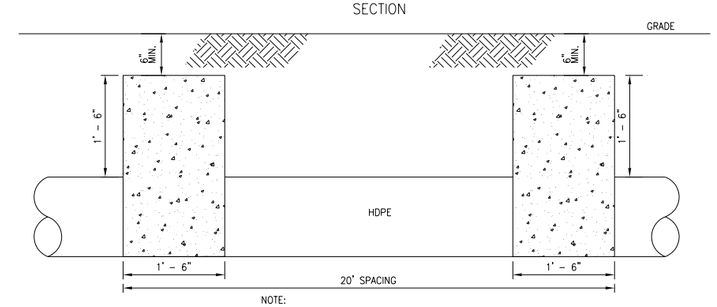

NOTE:

1. COLLAR SHALL BE MADE OF CLASS B CONCRETE.

ELEVATION

TYPICAL CAST-IN-PLACE ANTI-FLOTATION COLLARS 20 GC-3

NTS

REV	DATE	BY	DESCRIPTION
3	2-9-09	EW	MODIFIED 16A, 16B, 20 AND 21.
2	1-27-09	EW	MODIFIED DETAILS 27 AND 28
1	9-8-08	CL	ADDED NOTES FOR DETAIL 20

SCALE

WARNING 0 1/2 1 IF THIS BAR DOES NOT MEASURE 1" THEN DRAWING IS NOT TO SCALE

DESIGNED
DRAWN
CHECKED

CLEAN WATER ATLANTA
Including water, stormwater, wastewater

CITY OF ATLANTA

SEWER REHABILITATION

SUPPLEMENTAL DETAILS – 3

SHEET GC-3

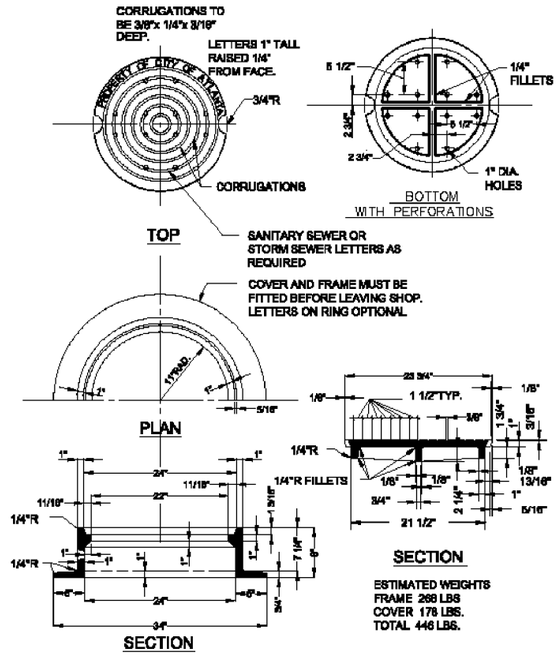

VENTED FRAME AND COVER | 21
NTS | GC-4

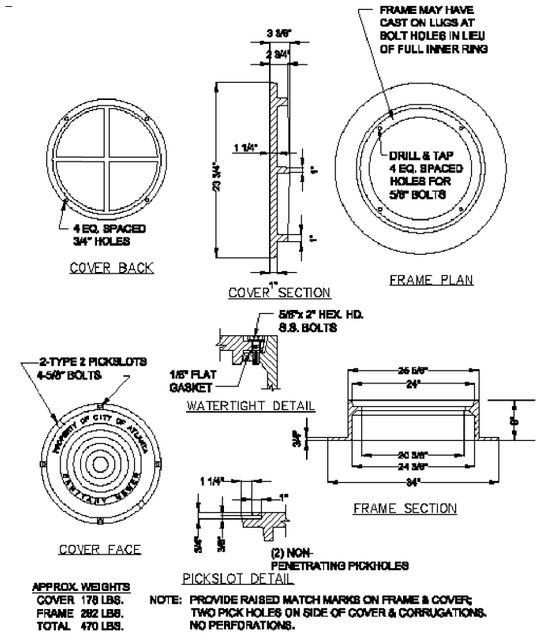

WATERTIGHT FRAME AND COVER | 22
NTS | GC-4

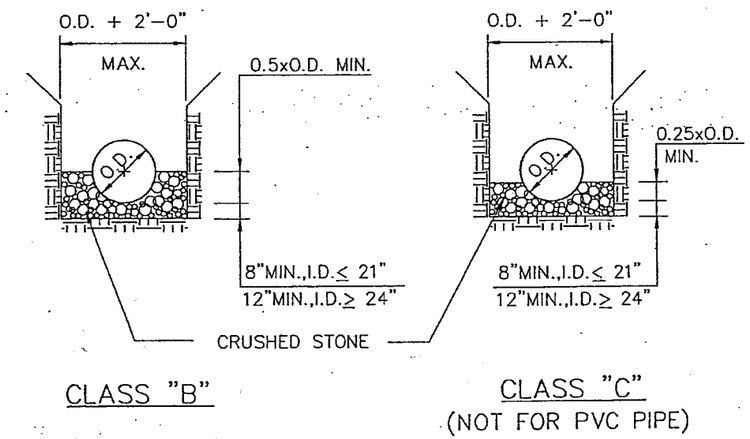

SEWER BEDDING AND HAUNCHING | 25
NTS | GC-4

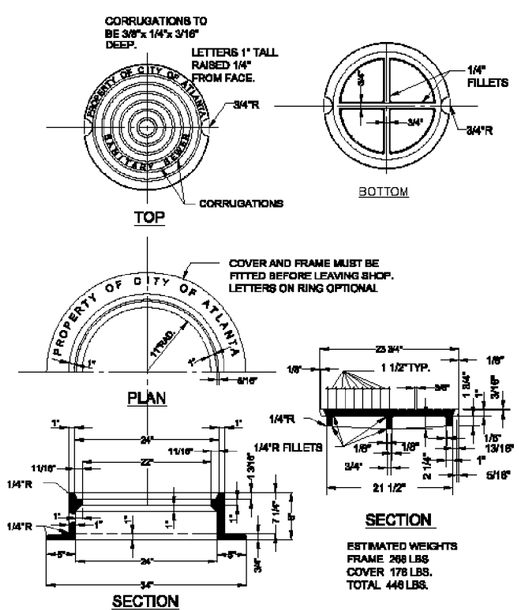

SOLID FRAME AND COVER | 23
NTS | GC-4

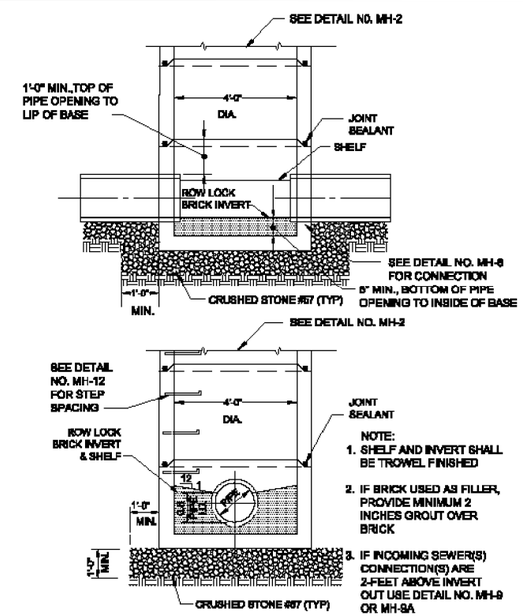

MANHOLE BASE | 24
NTS | GC-4

REV	DATE	BY	DESCRIPTION
3	4-5-11	EW	UPDATED 21 THRU 27
2	1-27-09	EW	MODIFIED 27 AND 28
1	5-21-08	CPL	25A AND 25B-MODIFICATION

SCALE N.T.S.

WARNING: IF THIS BAR DOES NOT EQUAL 1" THEN DRAWING IS NOT TO SCALE

DESIGNED ____
DRAWN ____
CHECKED ____

CLEAN WATER ATLANTA

CITY OF ATLANTA

SEWER REHABILITATION

STANDARD DETAILS – 4

SHEET GC-4

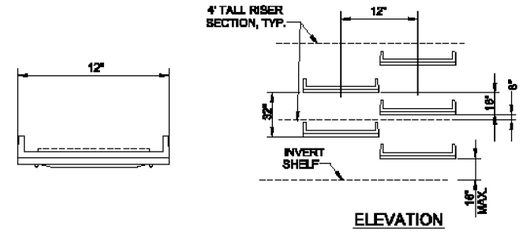

ELEVATION

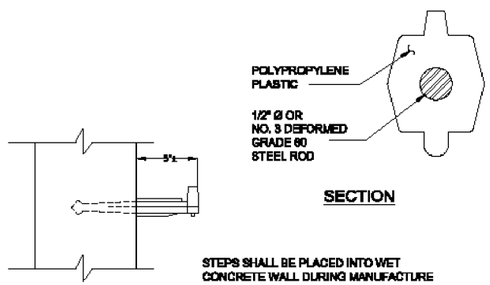

SECTION

STEPS SHALL BE PLACED INTO WET CONCRETE WALL DURING MANUFACTURE OR MORTORED IN TO HOLES AFTER CONCRETE HAS SET.

MANHOLE STEP | 25
NTS | GC-5

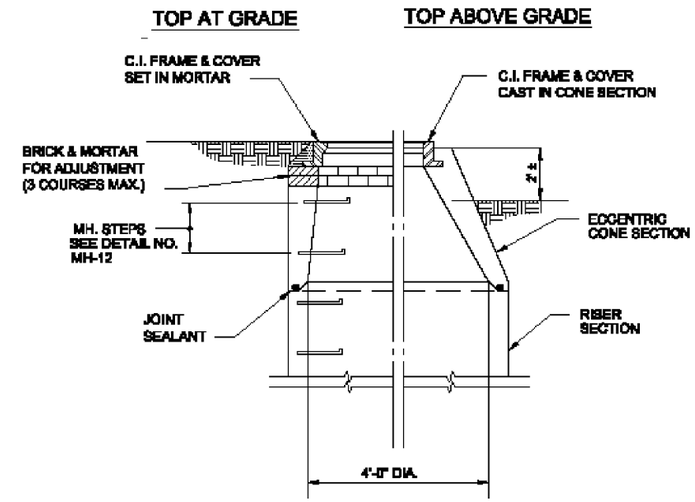

NOTE: FRAME & COVER SHALL BE CAST IN ALL CONE SECTIONS UNLESS FRAME & COVER IS TO BE FLUSH WITH FINAL GRADE.

MANHOLE RISER AND CONE | 26
NTS | GC-5

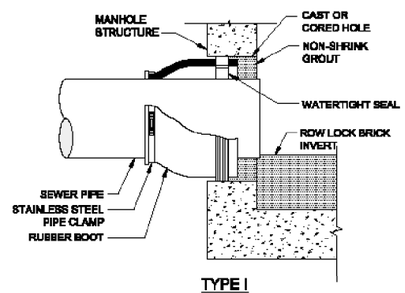

TYPE I

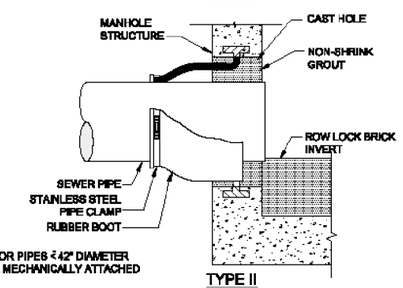

TYPE II

NOTE:
1. USE BOOTS FOR PIPES ≤ 42" DIAMETER
2. TYPE I IS FOR MECHANICALLY ATTACHED TYPE BOOTS.
3. TYPE II IS FOR CAST-IN BOOTS

BOOT CONNECTION | 27
NTS | GC-5

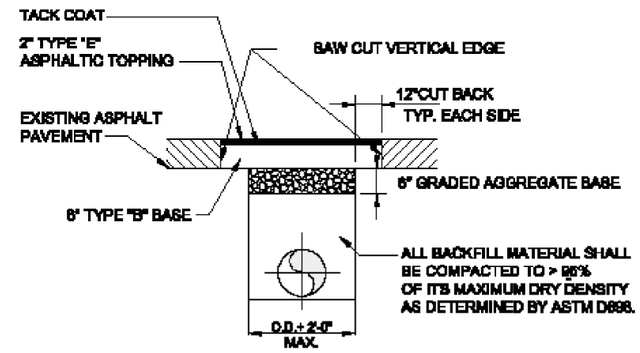

ASPHALT PAVEMENT

NOTE: PAVEMENT REPLACEMENT SHALL BE INSTALLED IN ACCORDANCE WITH GEORGIA DOT STANDARD SPECIFICATIONS

TYPE III PAVEMENT REPLACEMENT | 28
NTS | GC-5

REV	DATE	BY	DESCRIPTION
1	4-18-11	EW	NEW DRAWING

SCALE N.T.S.

WARNING: IF THIS BAR DOES NOT EQUAL 1" THEN DRAWING IS NOT TO SCALE

DESIGNED
DRAWN
CHECKED

CLEAN WATER ATLANTA — drinking water, stormwater, wastewater

CITY OF ATLANTA

SEWER REHABILITATION

STANDARD DETAILS – 5

SHEET GC-5

EROSION CONTROL NOTES

1. TYPE A. DESCRIPTION: WATER PERMEABLE FILTER FENCE MATERIAL COMPOSED OF STRONG ROT PROOF SYNTHETIC FIBERS FORMED INTO A MATRIX OF WOVEN OR NON-WOVEN FABRIC. EITHER TYPE OF FABRIC SHALL BE FREE OF ANY TREATMENT OR COATING WHICH MIGHT SIGNIFICANTLY ALTER THE PHYSICAL PROPERTIES AFTER INSTALLATION. THE FABRIC SHALL CONTAIN STABILIZER AND/OR INHIBITORS TO MAKE CERTAIN THE FILAMENTS ARE RESISTANT TO DETERIORATION RESULTING FROM EXPOSURE TO SUNLIGHT OR HEAT. THE FABRIC SHALL BE A PERVIOUS SHEET OF SYNTHETIC FIBERS ORIENTED INTO A STABLE NETWORK, SO THAT THE FIBERS RETAIN THEIR RELATIVE POSITION WITH RESPECT TO EACH OTHER.

   EDGES OF THE FABRIC SHALL BE FINISHED TO PREVENT THE OUTER YARN FROM PULLING AWAY FROM THE MATERIAL. THE FABRIC SHALL BE FREE OF DEFECTS OR FLAWS WHICH SIGNIFICANTLY AFFECT THE PHYSICAL AND/OR FILTERING PROPERTIES. THE FABRIC SHALL HAVE A MINIMUM WIDTH OF THIRTY SIX (36) INCHES. SHEETS OF FABRIC MAY BE SEWN OR BONDED TOGETHER. NO DEVIATION FROM ANY PHYSICAL STANDARD WILL BE PERMITTED, DUE TO THE PRESENCE OF THE SEAM.

   THE FABRIC MAY BE MANUFACTURED WITH POCKETS FOR POSTS, HEM WITH CORD, OR WITH POSTS PRE-ATTACHED USING STAPLES OR BUTTON-HEAD NAILS.

2. TYPE B. DESCRIPTION: TYPE B FILTER FABRIC SHALL MEET THE SAME STANDARDS AS TYPE A. FILTER FABRIC SHALL BE A MINIMUM OF TWENTY TWO (22) INCHES IN WIDTH.

3. MATERIALS.
   A. POSTS.
      1. HARDWOOD: 1.5"x 1.5"x 48" MINIMUM FOR TYPE A FABRIC. FOR TYPE B FABRIC, 1"x 1"x 36" MIN.
      2. SOFTWOOD: 3" DIAMETER MINIMUM OR NOMINAL 2"x 4" FOR TYPE A FABRIC. FOR TYPE B FABRIC, A 2" DIAMETER OR NOMINAL 2"x 2".
      3. STEEL: POSTS SHALL BE ROUND, U.T. OR C SHAPED WITH A MINIMUM WEIGHT OF 1.3 POUNDS PER FOOT AND HAVE PROJECTIONS FOR FASTENING THE WIRE TO THE FENCE FOR TYPE A FABRIC. FOR TYPE B FABRIC, POSTS SHALL HAVE A MINIMUM WEIGHT OF .75 POUNDS PER FOOT. ROUND POSTS SHALL BE A MINIMUM OF 1" DIAMETER.

   B. SPACING. SIX (6) FOOT CENTERS MAXIMUM.

   C. FABRIC. GEORGIA DOT QUALIFIED PRODUCTS LIST #36 ONLY.

   D. FASTENERS. WIRE STAPLES WILL BE A NO. 17 GAUGE MINIMUM AND SHALL HAVE A CROWN AT LEAST 1/4" WIDE AND LEGS AT LEAST 1/2" IN LENGTH. STAPLES SHALL BE EVENLY SPACED WITH AT LEAST 5 PER POST. NAILS SHALL BE 14 GAUGE MINIMUM, 1" IN LENGTH, WITH 1/4" BUTTON HEADS. NAILS SHALL BE EVENLY SPACED WITH AT LEAST 4 PER POST.

4. INSTALLATION. TEMPORARY SILT FENCE INSTALLATION SHALL CONFORM TO THE STANDARDS SET FORTH IN THE MANUAL FOR EROSION AND SEDIMENT CONTROL IN GEORGIA.

5. MAINTENANCE. THE CONTRACTOR SHALL MAINTAIN THE SILT FENCE UNTIL THE PROJECT IS COMPLETED AND FINAL STABILIZATION IS ACHIEVED. FILTER FABRIC SHALL BE REMOVED AND REPLACED WHENEVER IT HAS DETERIORATED OR BEEN OTHERWISE DAMAGED TO SUCH AN EXTENT THAT IT REDUCES THE EFFECTIVENESS OF THE SILT FENCE.

   INSTALLATION OF FABRIC FENCE MATERIAL IN AREAS OF CONCENTRATED FLOW IS NOR RECOMMENDED UNLESS PROPER PROVISIONS ARE MADE TO SUPPLEMENT OR OTHERWISE STRENGTHEN THE FENCE SO AS TO WITHSTAND INCREASED DRAINAGE WATER VELOCITIES.

   NOTE: VENDOR MUST SUPPLY LETTER OF WARRANTY FOR THE AFOREMENTIONED SPECIFICATIONS. IN ADDITION, THIS LETTER SHOULD STATE THE FABRIC IS LISTED ON THE GEORGIA DOT QUALIFIED PRODUCTS LIST #36.

6. SILT FENCE MUST MEET THE REQUIREMENTS OF SECTION 171- TEMPORARY SILT FENCE OF THE DEPARTMENT OF TRANSPORTATION, STATE OF GEORGIA, STANDARD SPECIFICATIONS, 1983 EDITION.

7. ADDITIONAL EROSION CONTROL MEASURES WILL BE EMPLOYED WHERE DETERMINED NECESSARY BY ACTUAL SITE CONDITIONS.

8. PROVISIONS TO PREVENT EROSION OF SOIL FROM SITE SHALL BE, AS MINIMUM, IN ACCORDANCE WITH THE REQUIREMENTS OF THE COUNTY EROSION AND SEDIMENTATION ORDNANCE AND CITY OF ATLANTA CODE OF LAWS.

9. PRIOR TO ANY OTHER CONSTRUCTION, A STABILIZED CONSTRUCTION ENTRANCE SHALL BE CONSTRUCTED AT EACH POINT OF ENTRY OR EXIT FROM THE SITE.

10. THE CONSTRUCTION EXITS SHALL BE MAINTAINED IN A CONDITION WHICH WILL PREVENT TRACKING OR FLOW OF MUD ONTO PUBLIC RIGHT-OF-WAY. THIS MAY REQUIRE PERIODIC TOP DRESSING WITH STONE, AS CONDITIONS DEMAND, AND REPAIR AND/OR CLEAN-OUT OF ANY STRUCTURES USED TO TRAP SEDIMENT. ALL MATERIALS SPILLED, DROPPED WASHED, OR TRACKED FROM THE VEHICLE OR SITE, ONTO PUBLIC ROADWAYS OR INTO STORM DRAINS MUST BE IMMEDIATELY REMOVED.

11. PRIOR TO COMMENCING LAND DISTURBANCE ACTIVITY, THE LIMITS OF CONSTRUCTION SHALL BE CLEARLY AND ACCURATELY ESTABLISHED WITH STAKES, RIBBONS, OR OTHER PRE-APPROVED METHODS. THE LOCATION AND EXTENT OF ALL AUTHORIZED LAND DISTURBANCE ACTIVITY SHALL BE ESTABLISHED FOR THE DURATION OF THE CONSTRUCTION ACTIVITY. NO CONSTRUCTION SHALL OCCUR OUTSIDE THE APPROVED LIMITS INDICATED ON THE APPROVED PLANS AND EASEMENT PLATS.

12. IMMEDIATELY AFTER THE ESTABLISHMENT OF CONSTRUCTION ENTRANCES/EXITS, ALL PERIMETER EROSION CONTROL DEVICES AND STORMWATER MANAGEMENT DEVICES SHALL BE INSTALLED PRIOR TO ANY OTHER CONSTRUCTION.

13. THE CONTRACTOR SHALL FURNISH AND MAINTAIN ALL NECESSARY BARRICADES, WHILE ROADWAY FRONTAGE IMPROVEMENTS ARE BEING MADE.

14. THE CONSTRUCTION OF THE SITE WILL INITIATE WITH THE INSTALLATION OF EROSION CONTROL MEASURES SUFFICIENT TO CONTROL SEDIMENT DEPOSITS AND EROSION. ALL SEDIMENT CONTROL WILL BE MAINTAINED UNTIL THE UP-STREAM GROUND, WITHIN THE CONSTRUCTION AREA, HAS BEEN COMPLETELY STABILIZED WITH PERMANENT VEGETATION AND ALL ROADS/DRIVEWAYS HAVE BEEN PAVED.

15. EROSION CONTROL DEVICES SHALL BE INSTALLED IMMEDIATELY AFTER GROUND DISTURBANCE OCCURS. THE LOCATION OF SOME OF THE EROSION CONTRCL DEVICES MAY HAVE TO BE ALTERED FROM THAT SHOWN ON THE APPROVED PLANS, IF DRAINAGE PATTERNS, DURING CONSTRUCTION, ARE DIFFERENT FROM THE FINAL PROPOSED PATTERNS. IT IS THE CONTRACTOR'S RESPONSIBILITY TO ACCOMPLISH EROSION CONTROL FOR ALL DRAINAGE PATTERNS CREATED AT VARIOUS STAGES DURING CONSTRUCTION. DIFFICULTY IN CONTROLLING EROSION DURING ANY PHASE OF CONSTRUCTION SHALL BE REPORTED TO THE ENGINEER, IMMEDIATELY.

16. ALL SILT BARRIERS MUST BE PLACED AS ACCESS IS OBTAINED DURING CLEARING. NO GRADING SHALL BE PERFORMED UNTIL SILT BARRIER INSTALLATION AND DETENTION FACILITIES ARE CONSTRUCTED.

17. CONTRACTOR SHALL MAINTAIN ALL EROSION CONTROL MEASURES UNTIL PERMANENT VEGETATION HAS BEEN ESTABLISHED. CONTRACTOR SHALL CLEAN OUT ALL SEDIMENT PONDS WHEN REQUIRED BY THE ENGINEER OR CITY OF ATLANTA INSPECTOR.

18. THE CONTRACTOR SHALL REMOVE ACCUMULATED SILT WHEN IT IS WITHIN 12" FROM TOP OF THE SILT FENCE, UTILIZED FOR EROSION CONTROL. IN DETENTION PONDS, SILT SHALL BE REMOVED WHEN A DEPTH OF 18" HAS ACCUMULATED, AT THE WEIR.

19. FAILURE TO INSTALL, OPERATE OR MAINTAIN ALL EROSION CONTROL MEASURES WILL RESULT IN CONSTRUCTION BEING HALTED, UNTIL ALL PROBLEMS HAVE BEEN CORRECTED TO CITY OF ATLANTA STANDARDS.

20. ALL EASEMENTS DISTURBED MUST BE DRESSED AND GRASSED TO CONTROL EROSION (SEE STANDARD EROSION CONTROL DETAILS).

21. ALL OPEN SWALES MUST BE GRASSED AND RIP-RAP MUST BE PLACED AS REQUIRED TO CONTROL EROSION. A MINIMUM OF 4.5 SQUARE YARDS OF 50 LB. STONES SHALL BE PLACED AT ALL DOWNSTREAM HEADWALLS. THE PLACEMENT OF RIP-RAP, AT DOWNSTREAM HEADWALLS, SHALL BE IN PLACE IMMEDIATELY UPON THE INSTALLATION OF PIPES AND DRAINAGE DITCHES.

22. SILT BARRIERS TO BE PLACED AT DOWNSTREAM TOE OF ALL CUT AND FILL SLOPES.

23. PROVIDE CITY OF ATLANTA STANDARD 201-TYPE 1 SILT GATES AT ALL INLET HEADWALLS.

24. PROVIDE CITY OF ATLANTA STANDARD 201-TYPE 3 SILT GATES AT ALL CATCH BASINS, JUNCTION BOXES, MANHOLES, AND DROP INLETS.

25. CHECK DAMS SHALL BE CONSTRUCTED AT THE LOCATIONS SHOWN OR AS DIRECTED BY THE ENGINEER AND IN ACCORDANCE WITH THE DETAILS SHOWN ON THE DRAWINGS, AND SHALL BE CONSTRUCTED BEFORE ANY GRADING OR CLEARING AND GRUBBING IS ACCOMPLISHED. ALL GRADED AREAS, SLOPES, WATERWAYS, ETC., WHICH DRAIN TOWARD THE CHECK DAM SHALL BE GRASSED OR STABILIZED WITH STRAW MULCH IMMEDIATELY AFTER GRADING.

26. THE CONTRACTOR WILL RE REQUIRED TO MAINTAIN THE CHECK DAMS IN GOOD REPAIR BY CLEANING OUT ACCUMULATED SEDIMENT AND REPAIRING THE CHECK DAMS AS NEEDED DURING THE LIFE OF THE CONTRACT.

27. THE NUMBER OF CHECK DAMS AND LENGTH OF SILT FENCE INDICATED ON THE DRAWINGS ARE THE ESTIMATED AMOUNTS REQUIRED. ADDITIONAL CHECK DAMS OR SILT FENCING MAY BE NECESSARY AND SHALL BE PROMPTLY INSTALLED IF REQUIRED BY THE ENGINEER OR BY THE CITY OF ATLANTA INSPECTOR.

28. WHEN THE PERMANENT DRAINAGE STRUCTURES HAVE BEEN INSTALLED AND THE GRASS ON THE PLANTED SHOULDERS, SLOPES, AND WATERWAYS IS SUFFICIENTLY ESTABLISHED TO BE AN EFFECTIVE EROSION DETERRENT. CHECK DAMS SHALL BE REMOVED AND ALL BARE SPOTS SHALL BE PERMANENTLY GRASSED.

29. CONTRACTOR SHALL MAKE EVERY EFFORT TO MINIMIZE WIDTH OF EASEMENT CLEARING AND PRESERVE TREES AND GROWTH ALONG STREAM BANKS. ALL AREAS ALONG THE CREEK BANK WHICH ARE DISTURBED SHALL BE RIP-RAPPED AS SHOWN ON THE DRAWINGS OR DIRECTED BY THE ENGINEER.

30. TWENTY-FIVE FOOT STREAM BUFFER TO BE MAINTAINED EXCEPT WHERE ALLOWED TO INTERVENE BY ENGINEER.

31. PIPE LAYING WORK SHALL PROGRESS SUCH THAT THE MAXIMUM AMOUNT OF OPEN TRENCH DURING WORK HOURS IS LESS THAN 500 LINEAR FEET. AT THE END OF EACH WORKING DAY, THE MAXIMUM LENGTH OF OPEN EXCAVATION SHALL BE 30 LINEAR FEET. SOIL STABILIZATION INCLUDING MULCHING AND SEEDING SHALL BE PERFORMED ON A DAILY BASIS SUCH THAT ALL BACKFILLED TRENCHES ARE STABILIZED WITHIN 24 HOURS AND THAT AT NO TIME SHALL THE TOTAL LENGTH OF UNSTABILIZED BACKFILLED TRENCH EXCEED 500 LINEAR FEET. IN AREAS WHERE THIS STABILIZATION SCHEDULE CANNOT BE MET, AND AREAS SUBJECT TO REPEATED CONSTRUCTION TRAFFIC, SILT FENCE SHALL BE INSTALLED ALONG THE ENTIRE LOWER LIMITS OF THE AREA AT THE CONTRACTOR'S EXPENSE.

EROSION CONTROL SCHEDULE

AT THE PRE-CONSTRUCTION CONFERENCE, THE CONTRACTOR SHALL PRESENT HIS PROPOSED PLANS AND SCHEDULES FOR CONSTRUCTION OF THE PROJECT, IN ACCORDANCE WITH THE REQUIREMENTS OF THIS SECTION. THE SCHEDULE SHALL BE EASED ON THE ANALYSIS OF PROJECT CONDITIONS AND EROSION POTENTIAL, AND SHALL BE IN WRITTEN FORM. THIS SCHEDULE SHALL SPECIFICALLY INDICATE THE SEQUENCE OF CLEARING AND GRUBBING, EARTHWORK OPERATIONS, AND CONSTRUCTION OF PERMANENT EROSION CONTROL FEATURES, AND THE PROPOSED USES OF TEMPORARY EROSION CONTROL DEVICES, INCLUDING DETAILS. IT SHALL ALSO INCLUDE PROPOSED METHODS TO PREVENT POLLUTION AND UNNECESSARY DISRUPTION OF STREAMS, LAKES, RESERVOIRS, AND OTHER IMPOUNDMENTS, AS RESULTS OF CONSTRUCTION OPERATIONS.

THE CONTRACTOR SHALL ALSO OUTLINE HIS PROPOSED METHODS OF CONTROLLING EROSION AND PREVENTING POLLUTION OF HAUL ROADS AND IN BORROW PITS, AND AREAS USED FOR DISPOSAL OF WASTE MATERIALS FROM THE PROJECT.

NO WORK SHALL BE STARTED UNTIL THE AFOREMENTIONED PLANS AND SCHEDULES HAVE BEEN APPROVED BY THE CITY OF ATLANTA ENGINEER. THE CONTRACTOR WILL BE RESPONSIBLE FOR ACCOMPLISHMENT OF THE WORK IN ACCORDANCE WITH THE ACCEPTED PLANS AND SCHEDULES. THE ENGINEER MAY AFFECT OR APPROVE CHANGES MADE NECESSARY BY UNFORESEEN CIRCUMSTANCES, WHICH ARE BEYOND THE CONTROL OF THE CONTRACTOR.

CONSTRUCTION:

A. GENERAL. THE ENGINEER HAS THE AUTHORITY TO LIMIT THE SURFACE AREA OF ERODIBLE EARTH MATERIAL EXPOSED BY CLEARING AND GRUBBING, THE SURFACE AREA OF ERODIBLE MATERIAL EXPOSED BY EXCAVATION, BORROW AND FILL OPERATIONS, AND TO DIRECT THE CONTRACTOR TO PROVIDE IMMEDIATE PERMANENT OR TEMPORARY EROSION AND POLLUTION CONTROL MEASURES, TO PREVENT CONTAMINATION OF ADJACENT STREAMS OR OTHER WATER COURSES, LAKES, PONDS, OR OTHER AREAS OF WATER IMPOUNDMENT.

SUCH WORK MAY INVOLVE THE CONSTRUCTION OF TEMPORARY BERMS, DIKES, DAMS, SEDIMENT BASINS, SLOPE DRAINS, AND USE OF TEMPORARY MULCHES, MATS, SEEDING, OR OTHER CONTROL DEVICES OR METHODS AS NECESSARY TO CONTROL EROSION. CUT SLOPES SHALL BE SEEDED AND MULCHED AS THE EXCAVATION PROCEEDS. THE CONTRACTOR WILL BE REQUIRED TO INCORPORATE ALL PERMANENT EROSION CONTROL FEATURES INTO THE PROJECT, AT THE EARLIEST TIME, AS OUTLINED IN HIS/HER ACCEPTED SCHEDULE. TEMPORARY EROSION CONTROL MEASURES WILL BE INSTALLED IN ANTICIPATION OF POTENTIAL EROSION PROBLEMS, OR FOR CONTROL OF UNFORESEEN EROSION, AS IT OCCURS.

B. CLEARING AND GRUBBING OPERATIONS SHALL BE SO SCHEDULED AND PERFORMED SO THAT GRADING OPERATIONS AND PERMANENT EROSION CONTROL FEATURES CAN FOLLOW IMMEDIATELY THEREAFTER, IF THE PROJECT CONDITIONS PERMIT; OTHERWISE, TEMPORARY EROSION CONTROL MEASURES MAY BE REQUIRED BETWEEN SUCCESSIVE CONSTRUCTION STAGES.

C. THE ENGINEER WILL LIMIT THE AREA OF EXCAVATION, BORROW AND EMBANKMENT OPERATIONS IN PROGRESS, COMMENSURATE WITH THE CONTRACTOR'S CAPABILITY AND PROGRESS IN KEEPING THE FINISH GRADING, MULCHING, SEEDING, AND OTHER SUCH PERMANENT POLLUTION CONTROL MEASURES CURRENT, IN ACCORDANCE WITH THE ACCEPTED SCHEDULE. SHOULD SEASONAL LIMITATIONS MAKE SUCH COORDINATION UNREALISTIC, TEMPORARY EROSION CONTROL MEASURES SHALL BE TAKEN IMMEDIATELY TO THE EXTENT FEASIBLE AND JUSTIFIED.

GRADING OPERATION:

EACH ROADWAY CUT AND EMBANKMENT SHALL BE COMPLETED IN A CONTINUOUS MANNER, UNLESS OTHERWISE PROVIDED FOR IN THE CONTRACT OR ORDERED BY THE ENGINEER. THE CONTRACTOR SHALL MAINTAIN THE TOP OF THE EARTHWORK IN ALL ROADWAY SECTIONS THROUGH ALL CONSTRUCTION STAGES, IN A MANNER WHICH WILL PERMIT THE RUNOFF OF RAINWATER TO PREVENT EROSION. ON EMBANKMENTS WITH FLAT SLOPES WHERE SLOPE DRAINS ARE IMPRACTICAL, TEMPORARY GRASSING OR STRAW MULCH STABILIZATION SHALL BE CONSTRUCTED CONCURRENTLY WITH THE EMBANKMENT FORMATION. SHOULD SUCH PREVENTATIVE MEASURES FAIL TO FUNCTION EFFECTIVELY, THE CITY OF ATLANTA ENGINEER WILL REQUIRE THE CONTRACTOR TO ACT IMMEDIATELY TO BRING THE EROSION AND SILTATION UNDER CONTROL, BY ADDITIONAL TEMPORARY MEANS, AS NECESSARY.

THE EROSION CONTROL MEASURES DESCRIBED HEREIN SHALL BE CONTINUED UNTIL THE PERMANENT DRAINAGE FACILITIES HAVE BEEN CONSTRUCTED AND THE GRASS, ON PLANTED SLOPES, IS SUFFICIENTLY ESTABLISHED FOR EFFECTIVE STABILIZATION.

TEMPORARY GRASSING AND MULCHING:

WHERE STAGED CONSTRUCTION OR OTHER CONDITIONS NOT CONTROLLED BY THE CONTRACTOR PROHIBIT THE COMPLETION OF A ROADWAY SECTION, IN A CONTINUOUS MANNER, THE ENGINEER MAY ORDER THE CONTRACTOR TO APPLY SEEDING AND/OR TEMPORARY MULCH TO AN ERODIBLE AREA, EITHER ON OR OFF THE RIGHT-OF-WAY, BORROW PITS, TEMPORARY HAUL ROADS, OR WASTE AREAS.

A. TEMPORARY GRASS. TEMPORARY GRASS SHALL CONSIST OF SOWING A QUICK GROWING SPECIES OF GRASS, SUCH AS RYE, BROWN TOP MILLET, OR A CEREAL GRASS, SUITABLE TO THE AREA AND SEASON. SEEDING SHALL BE DONE IN ACCORDANCE WITH THE REQUIREMENT OF SECTION 700, IN GEORGIA'S DOT STANDARD SPECIFICATIONS. GROUND PREPARATION WILL BE THE MINIMUM REQUIRED TO PROVIDE A SEED BED. LIME AND FERTILIZER WILL BE OMITTED OR THE RATE OF APPLICATION REDUCED, AS DETERMINED BY THE ENGINEER. MULCH WILL ALSO BE OMITTED.

B. TEMPORARY MULCH. TEMPORARY MULCH WILL BE APPLIED IN ACCORDANCE WITH SECTION 164, GEORGIA'S DOT STANDARD SPECIFICATIONS. STRAW MULCH STABILIZATION, EXCEPT THAT AREA MULCHED, NEED NOT TO BE FINISHED GRADE OR CROSS-SECTION. THE MULCH AREAS MAY BE PLACED ON SLOPES AS STEEP AS 2:1, USING TRACTOR TO EMBED THE MULCH INTO THE SLOPE.

CONSTRUCTION IN STREAM BED:

UNLESS OTHERWISE APPROVED IN WRITING BY THE ENGINEER, CONSTRUCTION OPERATIONS IN RIVERS, STREAMS, AND IMPONDMENTS SHALL BE RESTRICTED TO THOSE AREAS WHERE CHANNEL CHANGES ARE SHOWN ON THE PLANS AND TO THOSE AREAS WHICH MUST BE ENTERED FOR THE CONSTRUCTION OF TEMPORARY OR PERMANENT STRUCTURES. AS SOON AS CONDITIONS PERMIT, RIVERS, STREAMS, AND EMPONDMENTS SHALL BE PROMPTLY CLEARED OF ALL FALSE WORK, PILING WHICH ARE TO BE REMOVED, DEBRIS, AND OTHER OBSTRUCTIONS PLACED THEREIN OR CAUSED BY THE CONSTRUCTION OPERATIONS. FREQUENT FORDING OF LIVE STREAMS WITH CONSTRUCTION EQUIPMENT, WILL NOT BE PERMITTED; THEREFORE, TEMPORARY BRIDGES OR OTHER STRUCTURES SHALL BE USED WHEN STREAM CROSSINGS ARE NECESSARY. MECHANIZED EQUIPMENT SHALL NOT BE OPERATED IN FLOWING STREAMS, EXCEPT AS MAY BE REQUIRED TO CONSTRUCT CHANNEL CHANGES AND TEMPORARY OR PERMANENT STRUCTURES, AND TO REMOVE TEMPORARY STRUCTURES.

CLEAN UP:

BEFORE THE WORK IS CONSIDERED AS COMPLETE, ALL RUBBISH AND UNUSED MATERIAL DUE TO OR CONNECTED WITH THE CONSTRUCTION MUST BE REMOVED AND THE PREMISES RETURNED TO A CONDITION SATISFACTORY TO CITY OF ATLANTA PUBLIC WORKS. STREETS, CURBS, CROSSWALKS, PAVEMENTS, SIDEWALKS, FENCING, AND OTHER PUBLIC AND PRIVATE PROPERTY DISTURBED OR DAMAGED, SHALL BE RESTORED TO THEIR FORMER CONDITION. FINAL ACCEPTANCE WILL BE WITHHELD, UNTIL SUCH WORK IS COMPLETED.

REV	DATE	BY	DESCRIPTION

SCALE: N.T.S.

WARNING: IF THIS BAR DOES NOT EQUAL 1" THEN DRAWING IS NOT TO SCALE

DESIGNED
DRAWN
CHECKED

CLEAN WATER ATLANTA — working water, stormwater, wastewater

CITY OF ATLANTA

SEWER REHABILITATION

EROSION CONTROL NOTES

SHEET EC-1

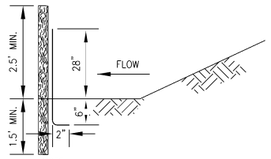

NOTE:
USE 36" DOT APPROVED FABRIC.
USE WOOD OR STEEL POSTS.

SIDE VIEW – TYPE A (Sd1–A)

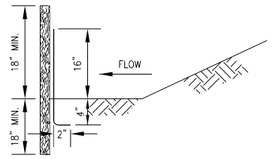

NOTE:
USE 22" DOT APPROVED FABRIC.
USE WOOD OR STEEL POSTS.

SIDE VIEW – TYPE B (Sd1–B)

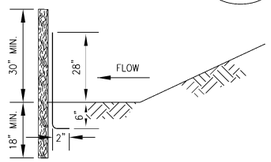

NOTE:
USE 36" DOT APPROVED FABRIC.
USE STEEL POSTS ONLY.

SIDE VIEW – TYPE C (Sd1–C)

NOTE:
IN AREAS OF ENCROACHMENT – CONTRACTOR SHALL USE DOUBLE ROWS.

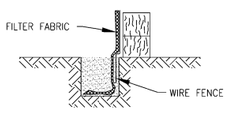

SECTION

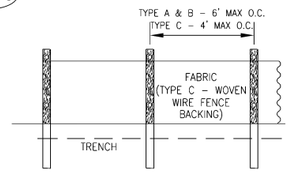

FRONT VIEW – ALL TYPES

UNIT CONVERSIONS:
4" = 10 cm

SILT FENCE 28
NOT TO SCALE EC–2

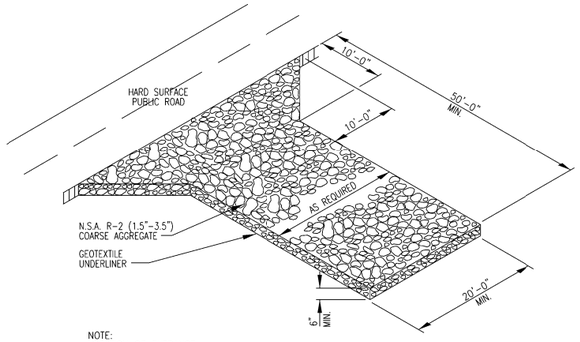

NOTE:
LOCATION OF ENTRANCE MAY VARY DURING CONSTRUCTION PERIOD.

(Co) TEMPORARY CONSTRUCTION EXIT 30
NOT TO SCALE EC–2

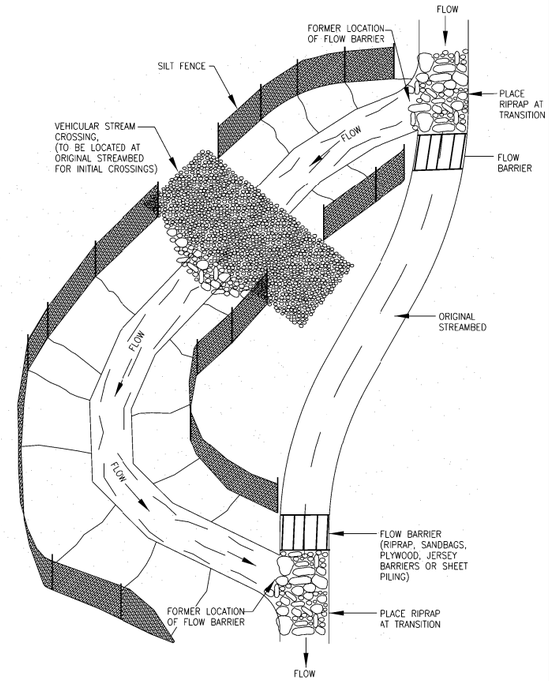

(Dc) TYPICAL STREAM DIVERSION CHANNEL 33
NTS EC–2

SPECIES	RATE PER 1,000 SQ. FT.	RATE PER ACRE [1]	PLANTING DATES [2] PIEDMONT
RYE	3 POUNDS	2–3 BU.	9/1–1/1 3/1–4/1
RYEGRASS	1 POUND	40–50 POUNDS	8/15–1/1
RYE AND ANNUAL LESPEDEZA	1–1/2 POUNDS 1/2 POUND	1 – 1–1/2 POUNDS 20–25 POUNDS	3/1–4/1 3/1–4/1
WEEPING LOVEGRASS	0.2 POUNDS	4–6 POUNDS	3/1–8/15
SUDANGRASS	1 POUND	35–45 POUNDS	4/1–7/15
BROWNTOP MILLET	1 POUND	30–40 POUNDS	4/1–7/15
WHEAT	3 POUNDS	2–3 BU.	10/15–1/1
BERMUDA	0.2 POUNDS	10 POUNDS	1/1–3/1 10/1–1/1
TALL FESCUE	1.1 POUNDS	50 POUNDS	3/1–4/1 8/15–10/15

[1] UNUSUAL SITE CONDITIONS AS DETERMINED BY ENGINEER MAY REQUIRE HEAVER SEEDING RATES.

[2] SEEDING DATES MAY NEED TO BE ALTERED TO FIT TEMPERATURE VARIATIONS AND LOCAL CONDITIONS.

ESTABLISHING A TEMPORARY VEGETATIVE COVER WITH FAST GROWING SEEDINGS

≤ 12 MONTHS OR UNTIL ESTABLISHMENT OF FINISHED GRADE OR PERMANENT VEGETATION

SITE PREPARATION:
- GRADING AND SHAPING
- SEEDBED PREPARATION
- APPLY LIME AND FERTILIZER
- PLANT SEEDINGS, SELECT SPECIES BY SEASON AND REGION
- APPLY MULCHING MATERIAL IF NEEDED
- IRRIGATE IF NEEDED BUT NOT AT RATE TO CAUSE EROSION

TEMPORARY STABILIZATION (Ds2) 34
EC–2

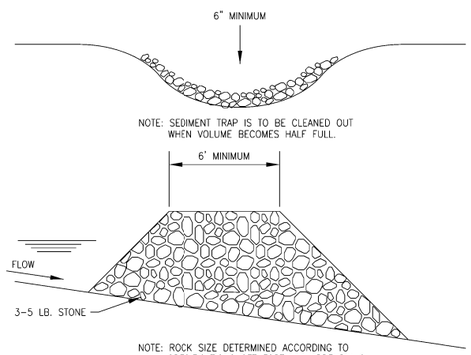

NOTE: SEDIMENT TRAP IS TO BE CLEANED OUT WHEN VOLUME BECOMES HALF FULL.

NOTE: ROCK SIZE DETERMINED ACCORDING TO SPECIFICATIONS SET FORTH IN APPENDIX C OF THE MANUAL FOR EROSION AND SEDIMENT CONTROL IN GEORGIA.

(Rd) ROCK DAM FOR SEDIMENT CONTROL 31
NOT TO SCALE EC–2

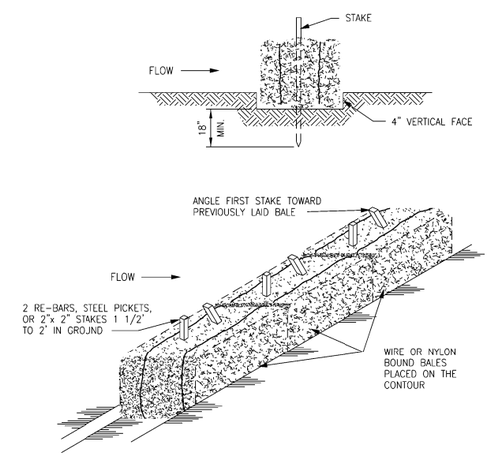

(Sd1) STACKED HAY BALES 29
NOT TO SCALE EC–2

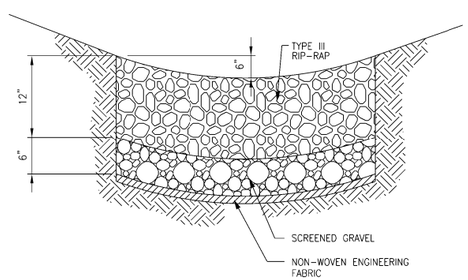

(Rp) TYPICAL DITCH RIP-RAP DETAIL 32
NOT TO SCALE EC–2

SYMBOL	CODE	PRACTICE
	Co	CONSTRUCTION EXIT/ENTRANCE
	Rd	ROCK DAM FOR SEDIMENT CONTROL
	Rp	RIP-RAP
	Sd1	SEDIMENT BARRIER (SILT FENCE)
	Sd1	SEDIMENT BARRIER (HAY BALES)
	Sd2	INLET SEDIMENT TRAP
SEE DETAILS 34/EC–2	Ds2	DISTURBED AREA STABLIZATION (TEMPORARY SEEDING)
SEE SPECIFICATIONS	Ds3	DISTURBED AREA STABLIZATION (PERMANENT VEGETATION)

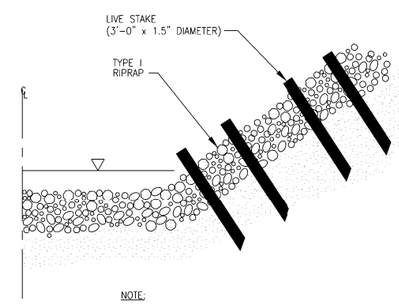

NOTE:
RIP-RAP TO BE 2'-0" DEEP ON SLOPES AND ACROSS STREAM BED. STREAM BANK EROSION CONTROL WILL BE INCLUDED IN COST OF STREAM CROSSING.

STREAM BANK EROSION CONTROL 35
NOT TO SCALE EC–2

REV	DATE	BY	DESCRIPTION

SCALE N.T.S.

WARNING: IF THIS BAR DOES NOT EQUAL 1" THEN DRAWING IS NOT TO SCALE

DESIGNED ____
DRAWN ____
CHECKED ____

CLEAN WATER ATLANTA — creating water, stormwater, wastewater

CITY OF ATLANTA

SEWER REHABILITATION

EROSION CONTROL DETAILS

SHEET EC–2

Job No.: 4000064 Location: Atlanta Program\SSES-13\Cured-in-Place\Drawings\Eros_Cont_Det.dwg Plot Date: 13-JAN-2006 8:00

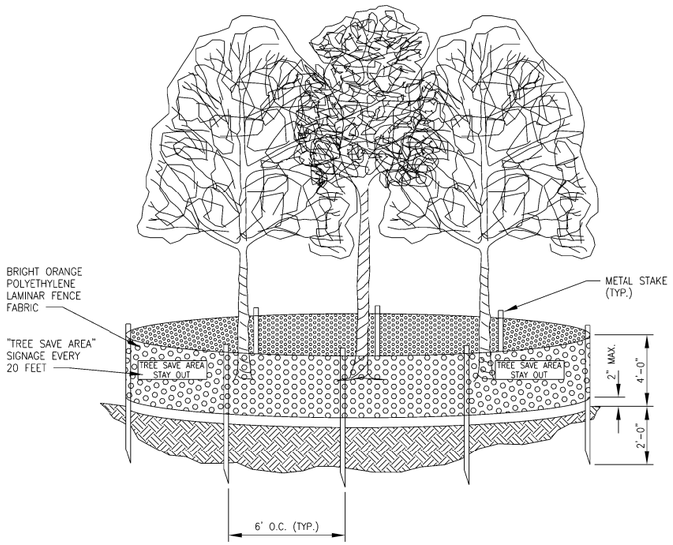

ALL TREE PROTECTION FENCE MUST BE ACCOMPANIED BY "KEEP OUT" OR "TREE SAVE" SIGNAGE. TREE PROTECTION FENCING SIGNS WILL BE AVAILABLE AT FULTON COUNTY GOVERNMENT IN THE DEPARTMENT OF ENVIRONMENT AND COMMUNITY DEVELOPMENT AT THE CASHIERS COUNTER. (PER FULTON COUNTY TREE PRESERVATION ORDINANCE ADOPTED BY THE BOARD OF COMMISSIONERS DECEMBER 1, 1999 EFFECTIVE 1/1/2000.

TREE PROTECTION DETAIL

N.T.S.

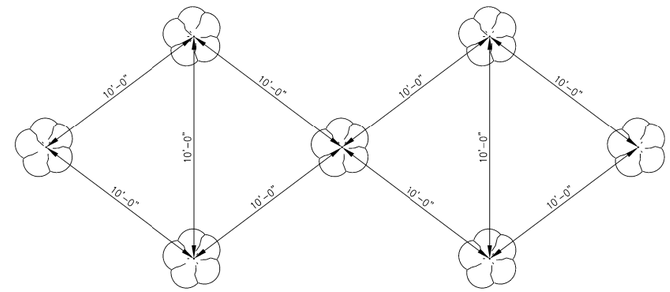

TREE REPLANTED MINIMUM SPACING PLAN

N.T.S.

NOTES:

1. IF THE LANDSCAPE DESIGN OR PLANT MATERIAL ARE CHANGED IN ANY WAY FROM THE CITY OF ATLANTA PERMITTED PLAN, YOU SHALL SUBMIT 2 SETS OF REVISED PLANS TO THE CITY OF ATLANTA ARBORIST'S OFFICE FOR APPROVAL PRIOR TO ANY LANDSCAPE INSTALLATION.

2. CONTACT THE CITY ARBORIST AT 404-817-6754 TO ARRANGE A PRECONSTRUCTION MEETING PRIOR TO ANY LAND DISTURBANCE. ALL REQUIRED TREE FENCE MUST BE INSTALLED PRIOR TO THIS MEETING. UNDISTURBED BUFFERS SHALL BE REPLANTED TO BUFFER STANDARDS WHERE SPARSELY VEGETATED OR WHERE DISTURBED AT APPROVED UTILITY CROSSINGS. REPLANTING IS SUBJECT TO COUNTY ARBORIST APPROVAL.

3. ALL LANDSCAPING FOR EACH PHASE OF DEVELOPMENT SHALL BE COMPLETED PRIOR TO THE RECORDING OF THE FINAL PLAT FOR THAT PHASE, PRIOR TO THE ISSUANCE OF CERTIFICATE OF OCCUPANCY FOR THAT PHASE, OR PRIOR TO CONNECTION OF PERMANENT POWER FOR THAT PHASE. CONTACT THE CITY ARBORIST FOR SITE INSPECTION UPON COMPLETION OF LANDSCAPE INSTALLATION.

4. PROVISIONS FOR TREE PROTECTION ON THE SITE SHALL BE, AS A MINIMUM, IN CONFORMANCE WITH THE REQUIREMENTS OF THE LATEST EDITION OF THE CITY OF ATLANTA TREE PRESERVATION ORDINANCE AND ADMINISTRATIVE GUIDELINES PERTAINING TO TREE PROTECTION.

5. TREES TO BE PROTECTED SHALL HAVE FENCING A NUMBER OF LINEAR FEET AWAY FROM TREE THAT IS EQUAL TO THE NUMBER OF INCHES THE DIAMETER OF THE TREE.

6. PLANTING OF TREES SHALL OCCUR IN OPTIMUM TREE PLANTING SEASON PRIOR TO COMPLETION OF PROJECT.

REV	DATE	BY	DESCRIPTION

SCALE

WARNING
IF THIS BAR DOES NOT EQUAL 1" THEN DRAWING IS NOT TO SCALE

DESIGNED
DRAWN
CHECKED

CLEAN WATER ATLANTA
working water, stormwater, wastewater

CITY OF ATLANTA

SEWER REHABILITATION

LANDSCAPE AND TREE PROTECTION DETAILS

SHEET
LP-1