CITY OF ATLANTA
ADVERTISEMENT FOR BIDS

Sealed bids for **Bid No. 7716-BL, SEWER MANHOLES, CATCH BASIN, CAST IRON METER BOXES, SANITARY CLEANOUT BOXES, LIDS AND PRECAST REINCFORCED CONCRETE MANHOLES,** will be received by designated staff of the Department of Procurement, at 55 Trinity Avenue, City Hall South, Suite 1900, Atlanta, GA 30303-0307, and **must be time stamped no later than 2:00 P.M., Tuesday, September 15, 2015**.

ABSOLUTELY NO BIDS WILL BE ACCEPTED AFTER 2:00 P.M.

Bids will be publicly opened and read at 2:00 P.M. in Suite 1900, 1st Floor, 55 Trinity Avenue, SW, City Hall South, Atlanta, Georgia.

PURPOSE AND SCOPE: To establish an indefinite quantity, firm fixed price contract to be used as the primary source for the commodity (ies)/services(s) listed in the attached specifications. Commodities/services will be ordered from time to time in such quantity as may be needed to fill any requirements of the City of Atlanta as shown in the bid invitation. As it is impossible to determine the precise quantities that may be needed during the contract period, the contractor is obligated to deliver in minimum/maximum quantities the commodities or services of the kind contracted for in accordance with the specific conditions of this bid.

General instructions, specifications for submitting bid packages for this project will be available as of **Thursday, August 20, 2015 from 8:15 A.M. – 5:00 P.M.**, in the Department of Procurement's Main Office, 1st Floor, 55 Trinity Avenue, SW, Suite 1900, City Hall South, Atlanta, Georgia. To request a bid package by mail, please contact the buyer.

Should you have any question/concerns, please contact Brandi Lennon, at (404) 865-8523, or by email balennon@atlantaga.gov.

The City of Atlanta reserves the right to reject any and all bids and to waive any technicalities.

This Bid is being made available by electronic means. If accepted by such means, the Proponent acknowledges and accepts full responsibility to insure that no changes are made to the Bid. In the event of conflict between a version of the Bid in the Proponent's possession and the version maintained by DOP, the version maintained by DOP shall govern.

You are required to email your business name, contact person, address, phone number, fax number and the project number to Ms. Brandi Lennon, Buyer at balennon@atlantaga.gov, to be placed on the Plan Holders List. Failure to do so will prevent you from receiving any addenda that are issued and may deem you non-responsive.

INVITATION FOR BID

BID NUMBER: 7716-BL
RTG DATE: Thursday, August 20, 2015
DEPARTMENT OF WATERSHED MANAGEMENT

SEALED BIDS FOR:

CITY OF ATLANTA (COA) SPECIFICATION FOR SEWER MANHOLES, CATCH BASIN, CAST IRON METER BOXES, SANITARY CLEANOUT BOXES, LIDS AND PRECAST REINFORCED CONCRETE MANHOLES TO BE ORDERED AS NEEDED FOR A PERIOD OF THREE (3) YEARS FROM DATE OF AWARD IN ACCORDANCE WITH THE ATTACHED SPECIFICATION.

Sealed bids, for furnishing the supplies or services contained herein will be received by:

CITY OF ATLANTA
DEPARTMENT OF PROCUREMENT
CITY HALL SOUTH, SUITE 1900
55 TRINITY AVENUE, S.W.
ATLANTA, GEORGIA 30303-0307

First floor, **no later than 2:00 P.M.,** (OUR BID CLOCK TIME IS VERIFIED AND CALIBRATED WITH THE BUREAU OF NATIONAL STANDARDS TIME PRIOR TO EACH BID OPENING) **Tuesday, September 15, 2015** and at that time will be publicly opened and read in Suite 1900.

A Pre-Bid Conference/Site Visit – N/A. The deadline for bidders to submit questions regarding the bid is **Friday, September 04, 2015. Questions** should be submitted via email to **Brandi Lennon**, Buyer at **balennon@atlantaga.gov**. For information, call (404) 330-8523.

This form **MUST** be returned with all bids. Bids must be typed or printed in **blue ink**. Refer to Bid Number, Date and Time on the **enclosed return label**. All bids must be hand delivered, delivered by courier service or mailed via United States Postal Service. No facsimile will be accepted. One (1) original ITB in **blue ink** must be submitted and must be marked as an original as well as one (1) ITB copy which must be marked as copy. **If you quote, please sign each "bid sheet" in blue ink, do not 'white out' entries or your bid may be deemed non-responsive. And, put the name of your company on each of the bid sheets or your bid may be deemed non-responsive.** If you do not quote, return signed bid invitation sheet and state reason; otherwise, your name may be removed from our mailing list. **Failure to follow these instructions could result in your bid being rejected.**

ALL COMMUNICATION PERTAINING TO THIS BID MUST BE DIRECTED TO THE DEPARTMENT OF PROCUREMENT REFERENCING BID NUMBER. BIDDER MAY NOT CONTACT OTHER BUREAUS OR CITY EMPLOYEES REGARDING THIS BID PRIOR TO AWARD OF PURCHASE ORDER. VIOLATION OF THIS INSTRUCTION WILL RESULT IN NON-ACCEPTANCE OF YOUR BID.

Legal Name of Firm	Authorized Representative/Please Type/Print
Address	Signature/Title
City State Zip Code	Area Code/Telephone Number/Email Address
Date Submitted	COA Supplier ID#

BIDS MAY BE SUBMITTED FOR EVALUATION, BUT NO AWARD WILL BE MADE UNLESS YOU POSSESS A CURRENT BUSINESS LICENSE THAT AUTHORIZES BIDDER TO TRANSACT BUSINESS AT A LOCATION IN THE STATE OF GEORGIA. IN THE CASE OF AN OUT OF STATE BUSINESS WITH NO LOCATION OR OFFICE IN GEORGIA, WHICH EXERTS SUBSTANTIAL EFFORTS WITHIN THE STATE AND CITY, SUCH BUSINESS MUST OBTAIN A CITY OF ATLANTA, BUSINESS LICENSE AS REQUIRED BY CITY CODE SECTION 30-52, ET SEQ. TO OBTAIN A BUSINESS LICENSE, CONTACT: CITY OF ATLANTA, BUSINESS LICENSE DIVISION, CITY HALL SOUTH, SUITE 1350, 55 TRINITY AVENUE, S.W., ATLANTA, GEORGIA 30303-0307, and (404) 330-6213.

In compliance with the aforementioned, the bidder agrees to furnish and deliver the goods and/or services at the prices indicated. It is agreed that this bid shall constitute an offer, and if accepted by the City, delivered to the designated point(s) within the time specified.

PRICES CONSIDERED F.O.B. DESTINATION UNLESS OTHERWISE STATED.

MERCHANDISE/SERVICE TO BE DELIVERED: AS DIRECTED

NOTE: Read all instruction, conditions, specifications, etc., in detail. Acceptance of your quotation guarantees your price and it cannot be withdrawn. Check all figures before submitting bid. UPON REQUEST, A COPY OF THE BID TABULATION WILL BE MADE AVAILABLE TO YOU AT A COST OF $.10 PER PAGE.

All Bids are subject to the following:

1. Compliance with City of Atlanta Code, Section 2-1413, Requirements for execution of City contracts and Section 2-1414, Equal Employment Opportunity clause. In conjunction with these Code sections, a completed Contract Employment Report or a current letter of certification from the City of Atlanta Office of Contract Compliance must accompany each bid.

2. Compliance with bidding instructions, terms, and conditions (pages 3 and 4).

3. Other provisions, certifications, Insurance, Payment and/or Performance Bonds, if incorporated by reference in this schedule.

4. Additional instructions, special conditions applicable to indefinite quantity invitations on Annual Contracts.

5. A completed W-9 Request for taxpayer identification number and Certification Form.

6. A Notarized E-Verify Contractor Affidavit and/or Subcontractor Affidavit, even if not applicable.

7. Enter your City of Atlanta Supplier ID number on page one (1) of the ITB. A Supplier number can be obtained by registering at www.atlantaga.gov.

FIRM NAME_____ SIGNATURE_____

CITY OF ATLANTA

DEPARTMENT OF PROCUREMENT

BIDDING INSTRUCTIONS, TERMS AND CONDITIONS

1. **PREPARATION OF BIDS -**

(a) Bidders are expected to examine this invitation for bid, attached drawings, specifications, if any, and all instructions. Failure to do so will be at the bidder's risk.

(b) Unit price for each unit bid on shall be shown and such price shall include packing, unless otherwise specified. A total shall be entered in the amount column for each item bid on. In case of a discrepancy between a unit price and extended price, the unit price will be presumed to be correct.

(c) Specifications provided herein are intended to be open and non-restrictive. "Any" is used as a minimum standard of quality. When no reference or change is made on proposal by bidder, it is understood that the specific brand item named on proposal shall be furnished by bidder. If bidding on other than the make, model, brand or number as shown, and offered as an equal, complete technical information, specifications, manufacturer's name and catalog reference must be clearly stated on bid proposal or attached letter. Any deviation between brand offered and brand specified must also be clearly indicated.

The City of Atlanta, through the Chief Procurement Officer, Department of Procurement, shall be the sole judge in making determination as to equality.

(d) Time of delivery is a part of the consideration and must be stated in specific calendar days that must be adhered to. If the time varies on different items, the bidder shall so state. Failure to state delivery may be cause for disqualification.

(e) The City may accept any item or group of items or any bid, unless the bidder qualifies his bid by specific limitations. The right is reserved to reject any or all quotations and to waive technicalities.

(f) Verify your quotations before submission, as they cannot be withdrawn or corrected after being opened.

(g) If a prospective offer or elects to submit a NO BID, return the Invitation for Bid Cover sheet and state reason. Otherwise, the bidder may be removed from the mailing list.

(h) If federal excise tax applies, show amount of same that has already been deducted in determining your net price. The City is also exempt from state and local sales tax.

2. **EXPLANATIONS TO BIDDERS** - Any explanation desired by a bidder regarding the meaning or interpretation of the invitation for bid, drawings, specifications, etc., must be requested in writing and with sufficient time allowed for a reply to reach bidders before the submission of their bids. Any information given to a prospective bidder concerning an Invitation for Bids will be furnished to all prospective bidders, as an amendment to the invitation, if such information is necessary to bidders in submitting bids on the Invitation or if the lack of such information would be prejudicial to uninformed bidders. Receipt of amendments by a bidder must be acknowledged on the bid and a signed addendum returned, attached to the bid.

3. **SUBMISSION OF BIDS -**

   (a) DEFAULT: The award as a result of bids received under this invitation may be based in part on delivery factor. Accordingly, should a vendor fail to perform delivery within the time stated in your bid, he/she may then be declared in default of contract. In such an event, the City may then proceed to purchase in the open market the items from another source, and charge/collect from the defaulting vendor the excess cost to the City, which resulted from such open market purchase.

   (b) PATENT INDEMNITY: Except as otherwise provided, the successful bidder agrees to indemnify the City and its officers, agents and employees against liability, including cost and expenses for infringement upon any letters patent of the United States arising out of the performance of this contract, or out of the use or disposal by or for the account of the City of supplies furnished or construction work performed hereunder.

4. **CERTIFICATION OF INDEPENDENT PRICE DETERMINATION** - By submission of this bid, the bidder certifies, and in the case of joint bid each party thereto certifies as to its own organization, that in connection with this procurement: (1) The prices in this bid have been arrived at independently, without consultation, communication, or agreement, for the purpose of restricting competition, as to any matter relating to such prices with any other bidder or with any competitor; (2) Unless otherwise required by law, the prices which have been quoted in this bid have not been knowingly disclosed by the bidder and will not knowingly be disclosed by the bidder prior to opening, directly or indirectly to any other bidder or to any competitor; and (3) No attempt has been made or will be made by the bidder to induce any other person or firm to submit or not to submit a bid for the purpose of restricting competition.

5. **PROHIBITION AGAINST AND REPORTING OF ANTICOMPETITIVE PRACTICES** - Collusion and other anticompetitive practices among bidders and offer are prohibited by city, state and federal laws, and the City, therefore, establishes the following:

   Certification of independent price determination. All bidders or offer shall identify a person having authority to sign for the bidder or offer who shall certify, in writing, as follows:

"I certify that this bid or offer is made without prior understanding, agreement, or connection with any corporation, firm, or person submitting a bid or offer for the same supplies, services, construction, or professional or consultant services, and is in all respects fair and without collusion or fraud. I understand collusive bidding is a violation of city, state and federal law and can result in fines, prison sentences, and civil damages awards. I agree to abide by all conditions of this bid or offer and certify that I am authorized to sign for this bidder or offer or."Compliance with this subsection shall be considered met if the certification of independent price determination, as provided in this subsection, is set forth in an exhibit attached to the bid or offer and appropriate language incorporating the exhibit into the bid or offer is set forth therein.

6. **PROHIBITION AGAINST CONFLICTS OF INTEREST** – Please identify any Personal or Financial Relationships that may give rise to a conflict of interest as defined below:

   (1) Personal relationships: executives, board members and partners in firms submitting offers must disclose familial relationships with employees, officers and elected officials of the City of Atlanta. Familial relationships shall include spouse, domestic partner registered under section 94-133, mother, father, sister, brother, and natural or adopted children of an official or employee.

   Yes _____ No _____

   (2) Financial relationships: offerors must disclose any interest held with a City employee or official, or family members of a City employee or official, which may yield, directly or indirectly, a monetary or other material benefit to the offeror or the offeror's family members.

   Yes _____ No _____

   Please describe: _____
   _____
   _____
   _____
   _____

7. **AWARD OF CONTRACT** - The contract, if awarded, will be awarded to the responsible bidder whose bid will be most advantageous to the City, price and other factors considered. The contract will be awarded for a term of three (3) year(s) with the option to extend under the same terms and conditions for two (2), one (1) year extensions.

8. Failure to observe any of the instructions and conditions may constitute grounds for rejection of your bid.

9. **SECTION 2-1387, CERTIFICATION AS TO NON-DISCRIMINATION IN BIDS AND CONTRACTS.**

(a) All persons, firms or corporations supplying goods, material, equipment, supplies, improvements to real property, or services of any kind or character to the City of Atlanta, in accordance with section 2-1109, shall certify in writing on all bids and contracts, except those involving federally assisted construction projects, the following words:

> "We, the supplier of goods, materials, equipment or services covered by this bid or contract will not discriminate in any way in connection with this contract in the employment of persons, or refuse to continue the employment of any person, on account of race, creed, color, sex or national origin of such person."

(b) The wording of subsection (a) herein shall be included as a specification and appear on all bid invitations and purchase orders or contracts prepared as issued by any and all using agencies of the City.

(c) The federal guidelines, as related to non-discrimination in employment by government contracts and subcontractors promulgated by Executive Order No.11246 of September 24,1965, as amended with respect to sex by Executive Order No. 11375 of October 13, 1967, Sections 202, 203 and 204 of Part II of such orders, are hereby adopted by the City of Atlanta insofar as legally possible to do so, and those persons, firms or corporations set forth in subparagraph (a) above shall comply with same.

(d) The City shall have the right to reject any or all bids, and shall not enter into any contract with any person, firm or corporation and shall refuse to purchase any or all goods, materials, equipment or services from any vendor or contractor who fails to comply with the provisions of subsection (a) and/or (c) herein.

10. **REJECTION OF BID** - Bids may be considered irregular and may be rejected if they show omissions, alterations of form, additions not called for, conditions, limitations, unauthorized alternate bids or other irregularities of any kind. The City reserves the right to waive minor informalities or irregularities of bid.

The City reserves the right to accept or reject any and all bids submitted and is in no way obligated to any bidder who submits a bid for the supplies, service or items as set forth in these specifications.

Special Conditions
Annual Contract for Commodities/Services

1. PURPOSE AND SCOPE:

To establish an indefinite quantity, firm fixed price contract to be used as the primary source for the commodity(ies)/service(s) listed in the attached specifications. Commodities/services will be ordered from time to time as such quantity as may be needed to fill any requirements of the City of Atlanta as shown in the bid invitation. **As it is impossible to determine the precise quantities that may be needed during the contract period, the contractor is obligated to deliver in minimum/maximum quantities the commodities or services of the kind contrated for in accordance with the specific conditions of this bid.**

2. SUPPLY REQUIREMENTS:

The contractor shall be able to delivery all items that might be requested during the contract period in accordance with the terms and conditions of this bid. In the event a contractor's source should fail to supply any item, at any time, for any reason during the contract term, it will be contractor's responsibility to temporarily supply another item of equivalent quality meeting all specifications of the contract, at contract prices, terms and conditions, as an emergency measure, subject to prior approval of the Chief Procurement Officer, whose decision shall be final. If requested, sufficient and reasonable time may be allowed the contractor to acquire adequate stock to perform on the contract after award is made.

3. DELIVERY REQUIREMENTS:

Delivery will be made within the time shown in the specific bid conditions or where called for in the invitation, the time stated by the bidder.

4. PLACEMENT OF ORDERS:

Orders will be placed using one of the following methods:

a. Purchase orders will be issued as required for departments having a known requirement, fixed quantities, and one-time delivery, during the entire life of the contract.

b. A blanket order will be issued to those bureaus that have a recurring need for item(s) covered by this Invitation for Bid and will be issued for "as needed" use. Each blanket order issued will state what is needed, as well as a "**not-to-exceed**" dollar amount. The bureau will be allowed to purchase only those items listed in the awarded contract. Authorization to supply item(s)/services covered by this blanket order may be verbal or written communication from the using department(s).

5. URGENT REQUIREMENTS:

In the case of a bona fide emergency, wherein immediate delivery of an order is needed and the successful vendor cannot meet such a requirement, the City reserves the right to order from any vendor that can meet such a delivery requirement without penalty to the City.

6. RIGHT TO TERMINATE:

In the event any of the provisions of the contract are violated, the City may serve written notice of its intention to terminate the contract. Such notice will state the reasons for such intention, and unless within ten (10) days after serving notice upon the contractor, such violation has ceased and satisfactory arrangements for correction made, the contract shall, upon expiration of ten (10) days, be terminated. Further, the City reserves the right to terminate any contract in whole or in part upon giving thirty (30) days prior written notice to the other party.

7. PLEASE COMPLETE THE FOLLOWING:

Should a contract result from this invitation:

TO PLACE VERBAL ORDERS CONTRACT: _____
Name

_____
Telephone Number

CUSTOMER REPRESENTATIVE: _____
Name

_____
Telephone Number

BID SIGNER: _____
Name

_____
Address

_____
Telephone

IF NOT LOCAL, WILL TOLL FREE TELPHONE SERVICE BE PROVIDED BY TH VENDOR DURING THE EFFECTIVE PERIOD OF THE CONTRACT?

(NO)_____ (YES) _____

DELIVERS WILL BE MADE AGAINST THIS CONTRACT BY:

VENDOR OWNED EQUIPMENT: (NO) _____ (YES) _____
(If yes, the frequency) _____

COMMERICAL CARRIER: (NO) _____ (YES) _____
OTHER (Specify) _____

Bidder hereby agrees to special conditions of this invitation to bid:

Firm Name: _____

By: _____

Title: _____

THIS SHEET MUST BE COMPLETED. FAILURE TO DO SO MAY BE REASON FOR REJECTION OF BID.

BID NUMBER: **7716-BL**

CITY OF ATLANTA
Contract Employment Report
PLEASE TYPE OR PRINT IN INK. EACH APPLICABLE ITEM ON THIS FORM MUST BE COMPLETED.
INCOMPLETE FORMS WILL NOT BE PROCESSED.

NAME OF FIRM: _____ **TELEPHONE No.** _____

NAME OF OWNER: _____ **FAX NO.** _____

MAILING ADDRESS: _____ **CITY:** _____

STATE: _____ **COUNTY:** _____ **ZIP CODE:** _____

PLEASE COMPLETE THE FOLLOWING INFORMATION

WHAT TYPE OF BUSINESS WOULD YOUR COMPANY BE ENGAGED IN WITH THE CITY OF ATLANTA?

_____

IS YOUR COMPANY AN AFFILIATE OR DIVISION OF A PARENT COMPANY? _____

IF YOUR COMPANY IS A DIVISION OF A PARENT COMPANY, A CONTRACT EMPLOYMENT REPORT FORM MUST BE COMPLETED FOR THE PARENT COMPANY AS WELL AS THE ATLANTA AREA DIVISION.

HAS YOUR COMPANY PREVIOUSLY RECEIVED AN EEO CERTIFICATION FROM THE CITY OF ATLANTA? _____

PLEASE LIST THE NUMBER OF EMPLOYEES IN EACH CATEGORY

	Management/ Officials		**Professionals Arch, Engineers, etc**		**Supervisors**		**Office/Clerical/Sales**		**Craftsmen/Laborers**	
	Male	Female	Male	Female	Male	Female	Male	Female	Male	Female
Black										
White										
Asian American										
Native American										
Hispanic										
Other										
TOTAL										

I CERTIFY THAT ALL REPRESENTATIONS ON THIS CONTRACT EMPLOYMENT REPORT FORM ARE CORRECT AS OF THE DATE STATED.

_____ _____ _____ _____
DATE **PRINT PREPARER'S NAME** **PREPARER'S SIGNATURE** **TITLE**

Revised: 01/10/2013

Form **W-9**
(Rev. October 2007)
Department of the Treasury
Internal Revenue Service

Request for Taxpayer Identification Number and Certification

Give form to the requester. Do not send to the IRS.

Print or type
See Specific Instructions on page 2.

Name (as shown on your income tax return)

Business name, if different from above

Check appropriate box: ☐ Individual/Sole proprietor ☐ Corporation ☐ Partnership
☐ Limited liability company. Enter the tax classification (D=disregarded entity, C=corporation, P=partnership) ▶
☐ Other (see instructions) ▶

☐ Exempt payee

Address (number, street, and apt. or suite no.)

Requester's name and address (optional)

City, state, and ZIP code

List account number(s) here (optional)

Part I Taxpayer Identification Number (TIN)

Enter your TIN in the appropriate box. The TIN provided must match the name given on Line 1 to avoid backup withholding. For individuals, this is your social security number (SSN). However, for a resident alien, sole proprietor, or disregarded entity, see the Part I instructions on page 3. For other entities, it is your employer identification number (EIN). If you do not have a number, see *How to get a TIN* on page 3.

Note. If the account is in more than one name, see the chart on page 4 for guidelines on whose number to enter.

Social security number

or

Employer identification number

Part II Certification

Under penalties of perjury, I certify that:

1. The number shown on this form is my correct taxpayer identification number (or I am waiting for a number to be issued to me), and
2. I am not subject to backup withholding because: (a) I am exempt from backup withholding, or (b) I have not been notified by the Internal Revenue Service (IRS) that I am subject to backup withholding as a result of a failure to report all interest or dividends, or (c) the IRS has notified me that I am no longer subject to backup withholding, and
3. I am a U.S. citizen or other U.S. person (defined below).

Certification instructions. You must cross out item 2 above if you have been notified by the IRS that you are currently subject to backup withholding because you have failed to report all interest and dividends on your tax return. For real estate transactions, item 2 does not apply. For mortgage interest paid, acquisition or abandonment of secured property, cancellation of debt, contributions to an individual retirement arrangement (IRA), and generally, payments other than interest and dividends, you are not required to sign the Certification, but you must provide your correct TIN. See the instructions on page 4.

Sign Here **Signature of U.S. person ▶** **Date ▶**

General Instructions

Section references are to the Internal Revenue Code unless otherwise noted.

Purpose of Form

A person who is required to file an information return with the IRS must obtain your correct taxpayer identification number (TIN) to report, for example, income paid to you, real estate transactions, mortgage interest you paid, acquisition or abandonment of secured property, cancellation of debt, or contributions you made to an IRA.

Use Form W-9 only if you are a U.S. person (including a resident alien), to provide your correct TIN to the person requesting it (the requester) and, when applicable, to:

1. Certify that the TIN you are giving is correct (or you are waiting for a number to be issued),

2. Certify that you are not subject to backup withholding, or

3. Claim exemption from backup withholding if you are a U.S. exempt payee. If applicable, you are also certifying that as a U.S. person, your allocable share of any partnership income from a U.S. trade or business is not subject to the withholding tax on foreign partners' share of effectively connected income.

Note. If a requester gives you a form other than Form W-9 to request your TIN, you must use the requester's form if it is substantially similar to this Form W-9.

Definition of a U.S. person. For federal tax purposes, you are considered a U.S. person if you are:

- An individual who is a U.S. citizen or U.S. resident alien,
- A partnership, corporation, company, or association created or organized in the United States or under the laws of the United States,
- An estate (other than a foreign estate), or
- A domestic trust (as defined in Regulations section 301.7701-7).

Special rules for partnerships. Partnerships that conduct a trade or business in the United States are generally required to pay a withholding tax on any foreign partners' share of income from such business. Further, in certain cases where a Form W-9 has not been received, a partnership is required to presume that a partner is a foreign person, and pay the withholding tax. Therefore, if you are a U.S. person that is a partner in a partnership conducting a trade or business in the United States, provide Form W-9 to the partnership to establish your U.S. status and avoid withholding on your share of partnership income.

The person who gives Form W-9 to the partnership for purposes of establishing its U.S. status and avoiding withholding on its allocable share of net income from the partnership conducting a trade or business in the United States is in the following cases:

- The U.S. owner of a disregarded entity and not the entity,

- The U.S. grantor or other owner of a grantor trust and not the trust, and
- The U.S. trust (other than a grantor trust) and not the beneficiaries of the trust.

Foreign person. If you are a foreign person, do not use Form W-9. Instead, use the appropriate Form W-8 (see Publication 515, Withholding of Tax on Nonresident Aliens and Foreign Entities).

Nonresident alien who becomes a resident alien. Generally, only a nonresident alien individual may use the terms of a tax treaty to reduce or eliminate U.S. tax on certain types of income. However, most tax treaties contain a provision known as a "saving clause." Exceptions specified in the saving clause may permit an exemption from tax to continue for certain types of income even after the payee has otherwise become a U.S. resident alien for tax purposes.

If you are a U.S. resident alien who is relying on an exception contained in the saving clause of a tax treaty to claim an exemption from U.S. tax on certain types of income, you must attach a statement to Form W-9 that specifies the following five items:

1. The treaty country. Generally, this must be the same treaty under which you claimed exemption from tax as a nonresident alien.

2. The treaty article addressing the income.

3. The article number (or location) in the tax treaty that contains the saving clause and its exceptions.

4. The type and amount of income that qualifies for the exemption from tax.

5. Sufficient facts to justify the exemption from tax under the terms of the treaty article.

Example. Article 20 of the U.S.-China income tax treaty allows an exemption from tax for scholarship income received by a Chinese student temporarily present in the United States. Under U.S. law, this student will become a resident alien for tax purposes if his or her stay in the United States exceeds 5 calendar years. However, paragraph 2 of the first Protocol to the U.S.-China treaty (dated April 30, 1984) allows the provisions of Article 20 to continue to apply even after the Chinese student becomes a resident alien of the United States. A Chinese student who qualifies for this exception (under paragraph 2 of the first protocol) and is relying on this exception to claim an exemption from tax on his or her scholarship or fellowship income would attach to Form W-9 a statement that includes the information described above to support that exemption.

If you are a nonresident alien or a foreign entity not subject to backup withholding, give the requester the appropriate completed Form W-8.

What is backup withholding? Persons making certain payments to you must under certain conditions withhold and pay to the IRS 28% of such payments. This is called "backup withholding." Payments that may be subject to backup withholding include interest, tax-exempt interest, dividends, broker and barter exchange transactions, rents, royalties, nonemployee pay, and certain payments from fishing boat operators. Real estate transactions are not subject to backup withholding.

You will not be subject to backup withholding on payments you receive if you give the requester your correct TIN, make the proper certifications, and report all your taxable interest and dividends on your tax return.

Payments you receive will be subject to backup withholding if:

1. You do not furnish your TIN to the requester,

2. You do not certify your TIN when required (see the Part II instructions on page 3 for details),

3. The IRS tells the requester that you furnished an incorrect TIN,

4. The IRS tells you that you are subject to backup withholding because you did not report all your interest and dividends on your tax return (for reportable interest and dividends only), or

5. You do not certify to the requester that you are not subject to backup withholding under 4 above (for reportable interest and dividend accounts opened after 1983 only).

Certain payees and payments are exempt from backup withholding. See the instructions below and the separate Instructions for the Requester of Form W-9.

Also see *Special rules for partnerships* on page 1.

Penalties

Failure to furnish TIN. If you fail to furnish your correct TIN to a requester, you are subject to a penalty of $50 for each such failure unless your failure is due to reasonable cause and not to willful neglect.

Civil penalty for false information with respect to withholding. If you make a false statement with no reasonable basis that results in no backup withholding, you are subject to a $500 penalty.

Criminal penalty for falsifying information. Willfully falsifying certifications or affirmations may subject you to criminal penalties including fines and/or imprisonment.

Misuse of TINs. If the requester discloses or uses TINs in violation of federal law, the requester may be subject to civil and criminal penalties.

Specific Instructions

Name

If you are an individual, you must generally enter the name shown on your income tax return. However, if you have changed your last name, for instance, due to marriage without informing the Social Security Administration of the name change, enter your first name, the last name shown on your social security card, and your new last name.

If the account is in joint names, list first, and then circle, the name of the person or entity whose number you entered in Part I of the form.

Sole proprietor. Enter your individual name as shown on your income tax return on the "Name" line. You may enter your business, trade, or "doing business as (DBA)" name on the "Business name" line.

Limited liability company (LLC). Check the "Limited liability company" box only and enter the appropriate code for the tax classification ("D" for disregarded entity, "C" for corporation, "P" for partnership) in the space provided.

For a single-member LLC (including a foreign LLC with a domestic owner) that is disregarded as an entity separate from its owner under Regulations section 301.7701-3, enter the owner's name on the "Name" line. Enter the LLC's name on the "Business name" line.

For an LLC classified as a partnership or a corporation, enter the LLC's name on the "Name" line and any business, trade, or DBA name on the "Business name" line.

Other entities. Enter your business name as shown on required federal tax documents on the "Name" line. This name should match the name shown on the charter or other legal document creating the entity. You may enter any business, trade, or DBA name on the "Business name" line.

Note. You are requested to check the appropriate box for your status (individual/sole proprietor, corporation, etc.).

Exempt Payee

If you are exempt from backup withholding, enter your name as described above and check the appropriate box for your status, then check the "Exempt payee" box in the line following the business name, sign and date the form.

Generally, individuals (including sole proprietors) are not exempt from backup withholding. Corporations are exempt from backup withholding for certain payments, such as interest and dividends.

Note. If you are exempt from backup withholding, you should still complete this form to avoid possible erroneous backup withholding.

The following payees are exempt from backup withholding:

1. An organization exempt from tax under section 501(a), any IRA, or a custodial account under section 403(b)(7) if the account satisfies the requirements of section 401(f)(2),

2. The United States or any of its agencies or instrumentalities,

3. A state, the District of Columbia, a possession of the United States, or any of their political subdivisions or instrumentalities,

4. A foreign government or any of its political subdivisions, agencies, or instrumentalities, or

5. An international organization or any of its agencies or instrumentalities.

Other payees that may be exempt from backup withholding include:

6. A corporation,

7. A foreign central bank of issue,

8. A dealer in securities or commodities required to register in the United States, the District of Columbia, or a possession of the United States,

9. A futures commission merchant registered with the Commodity Futures Trading Commission,

10. A real estate investment trust,

11. An entity registered at all times during the tax year under the Investment Company Act of 1940,

12. A common trust fund operated by a bank under section 584(a),

13. A financial institution,

14. A middleman known in the investment community as a nominee or custodian, or

15. A trust exempt from tax under section 664 or described in section 4947.

The chart below shows types of payments that may be exempt from backup withholding. The chart applies to the exempt payees listed above, 1 through 15.

IF the payment is for . . .	THEN the payment is exempt for . . .
Interest and dividend payments	All exempt payees except for 9
Broker transactions	Exempt payees 1 through 13. Also, a person registered under the Investment Advisers Act of 1940 who regularly acts as a broker
Barter exchange transactions and patronage dividends	Exempt payees 1 through 5
Payments over $600 required to be reported and direct sales over $5,000[1]	Generally, exempt payees 1 through 7[2]

[1]See Form 1099-MISC, Miscellaneous Income, and its instructions.

[2]However, the following payments made to a corporation (including gross proceeds paid to an attorney under section 6045(f), even if the attorney is a corporation) and reportable on Form 1099-MISC are not exempt from backup withholding: medical and health care payments, attorneys' fees, and payments for services paid by a federal executive agency.

Part I. Taxpayer Identification Number (TIN)

Enter your TIN in the appropriate box. If you are a resident alien and you do not have and are not eligible to get an SSN, your TIN is your IRS individual taxpayer identification number (ITIN). Enter it in the social security number box. If you do not have an ITIN, see *How to get a TIN* below.

If you are a sole proprietor and you have an EIN, you may enter either your SSN or EIN. However, the IRS prefers that you use your SSN.

If you are a single-member LLC that is disregarded as an entity separate from its owner (see *Limited liability company (LLC)* on page 2), enter the owner's SSN (or EIN, if the owner has one). Do not enter the disregarded entity's EIN. If the LLC is classified as a corporation or partnership, enter the entity's EIN.

Note. See the chart on page 4 for further clarification of name and TIN combinations.

How to get a TIN. If you do not have a TIN, apply for one immediately. To apply for an SSN, get Form SS-5, Application for a Social Security Card, from your local Social Security Administration office or get this form online at *www.ssa.gov*. You may also get this form by calling 1-800-772-1213. Use Form W-7, Application for IRS Individual Taxpayer Identification Number, to apply for an ITIN, or Form SS-4, Application for Employer Identification Number, to apply for an EIN. You can apply for an EIN online by accessing the IRS website at *www.irs.gov/businesses* and clicking on Employer Identification Number (EIN) under Starting a Business. You can get Forms W-7 and SS-4 from the IRS by visiting *www.irs.gov* or by calling 1-800-TAX-FORM (1-800-829-3676).

If you are asked to complete Form W-9 but do not have a TIN, write "Applied For" in the space for the TIN, sign and date the form, and give it to the requester. For interest and dividend payments, and certain payments made with respect to readily tradable instruments, generally you will have 60 days to get a TIN and give it to the requester before you are subject to backup withholding on payments. The 60-day rule does not apply to other types of payments. You will be subject to backup withholding on all such payments until you provide your TIN to the requester.

Note. Entering "Applied For" means that you have already applied for a TIN or that you intend to apply for one soon.

Caution: *A disregarded domestic entity that has a foreign owner must use the appropriate Form W-8.*

Part II. Certification

To establish to the withholding agent that you are a U.S. person, or resident alien, sign Form W-9. You may be requested to sign by the withholding agent even if items 1, 4, and 5 below indicate otherwise.

For a joint account, only the person whose TIN is shown in Part I should sign (when required). Exempt payees, see *Exempt Payee* on page 2.

Signature requirements. Complete the certification as indicated in 1 through 5 below.

1. Interest, dividend, and barter exchange accounts opened before 1984 and broker accounts considered active during 1983. You must give your correct TIN, but you do not have to sign the certification.

2. Interest, dividend, broker, and barter exchange accounts opened after 1983 and broker accounts considered inactive during 1983. You must sign the certification or backup withholding will apply. If you are subject to backup withholding and you are merely providing your correct TIN to the requester, you must cross out item 2 in the certification before signing the form.

3. Real estate transactions. You must sign the certification. You may cross out item 2 of the certification.

4. Other payments. You must give your correct TIN, but you do not have to sign the certification unless you have been notified that you have previously given an incorrect TIN. "Other payments" include payments made in the course of the requester's trade or business for rents, royalties, goods (other than bills for merchandise), medical and health care services (including payments to corporations), payments to a nonemployee for services, payments to certain fishing boat crew members and fishermen, and gross proceeds paid to attorneys (including payments to corporations).

5. Mortgage interest paid by you, acquisition or abandonment of secured property, cancellation of debt, qualified tuition program payments (under section 529), IRA, Coverdell ESA, Archer MSA or HSA contributions or distributions, and pension distributions. You must give your correct TIN, but you do not have to sign the certification.

What Name and Number To Give the Requester

For this type of account:	Give name and SSN of:
1. Individual	The individual
2. Two or more individuals (joint account)	The actual owner of the account or, if combined funds, the first individual on the account [1]
3. Custodian account of a minor (Uniform Gift to Minors Act)	The minor [2]
4. a. The usual revocable savings trust (grantor is also trustee)	The grantor-trustee [1]
b. So-called trust account that is not a legal or valid trust under state law	The actual owner [1]
5. Sole proprietorship or disregarded entity owned by an individual	The owner [3]
For this type of account:	**Give name and EIN of:**
6. Disregarded entity not owned by an individual	The owner
7. A valid trust, estate, or pension trust	Legal entity [4]
8. Corporate or LLC electing corporate status on Form 8832	The corporation
9. Association, club, religious, charitable, educational, or other tax-exempt organization	The organization
10. Partnership or multi-member LLC	The partnership
11. A broker or registered nominee	The broker or nominee
12. Account with the Department of Agriculture in the name of a public entity (such as a state or local government, school district, or prison) that receives agricultural program payments	The public entity

[1] List first and circle the name of the person whose number you furnish. If only one person on a joint account has an SSN, that person's number must be furnished.

[2] Circle the minor's name and furnish the minor's SSN.

[3] You must show your individual name and you may also enter your business or "DBA" name on the second name line. You may use either your SSN or EIN (if you have one), but the IRS encourages you to use your SSN.

[4] List first and circle the name of the trust, estate, or pension trust. (Do not furnish the TIN of the personal representative or trustee unless the legal entity itself is not designated in the account title.) Also see *Special rules for partnerships* on page 1.

Note. If no name is circled when more than one name is listed, the number will be considered to be that of the first name listed.

Secure Your Tax Records from Identity Theft

Identity theft occurs when someone uses your personal information such as your name, social security number (SSN), or other identifying information, without your permission, to commit fraud or other crimes. An identity thief may use your SSN to get a job or may file a tax return using your SSN to receive a refund.

To reduce your risk:

- Protect your SSN,
- Ensure your employer is protecting your SSN, and
- Be careful when choosing a tax preparer.

Call the IRS at 1-800-829-1040 if you think your identity has been used inappropriately for tax purposes.

Victims of identity theft who are experiencing economic harm or a system problem, or are seeking help in resolving tax problems that have not been resolved through normal channels, may be eligible for Taxpayer Advocate Service (TAS) assistance. You can reach TAS by calling the TAS toll-free case intake line at 1-877-777-4778 or TTY/TDD 1-800-829-4059.

Protect yourself from suspicious emails or phishing schemes. Phishing is the creation and use of email and websites designed to mimic legitimate business emails and websites. The most common act is sending an email to a user falsely claiming to be an established legitimate enterprise in an attempt to scam the user into surrendering private information that will be used for identity theft.

The IRS does not initiate contacts with taxpayers via emails. Also, the IRS does not request personal detailed information through email or ask taxpayers for the PIN numbers, passwords, or similar secret access information for their credit card, bank, or other financial accounts.

If you receive an unsolicited email claiming to be from the IRS, forward this message to *phishing@irs.gov*. You may also report misuse of the IRS name, logo, or other IRS personal property to the Treasury Inspector General for Tax Administration at 1-800-366-4484. You can forward suspicious emails to the Federal Trade Commission at: *spam@uce.gov* or contact them at *www.consumer.gov/idtheft* or 1-877-IDTHEFT(438-4338).

Visit the IRS website at *www.irs.gov* to learn more about identity theft and how to reduce your risk.

Privacy Act Notice

Section 6109 of the Internal Revenue Code requires you to provide your correct TIN to persons who must file information returns with the IRS to report interest, dividends, and certain other income paid to you, mortgage interest you paid, the acquisition or abandonment of secured property, cancellation of debt, or contributions you made to an IRA, or Archer MSA or HSA. The IRS uses the numbers for identification purposes and to help verify the accuracy of your tax return. The IRS may also provide this information to the Department of Justice for civil and criminal litigation, and to cities, states, the District of Columbia, and U.S. possessions to carry out their tax laws. We may also disclose this information to other countries under a tax treaty, to federal and state agencies to enforce federal nontax criminal laws, or to federal law enforcement and intelligence agencies to combat terrorism.

You must provide your TIN whether or not you are required to file a tax return. Payers must generally withhold 28% of taxable interest, dividend, and certain other payments to a payee who does not give a TIN to a payer. Certain penalties may also apply.

Contractor Affidavit under O.C.G.A. § 13-10-91(b)(1)

By executing this affidavit, the undersigned contractor verifies its compliance with O.C.G.A. § 13-10-91, stating affirmatively that the individual, firm or corporation which is engaged in the physical performance of services on behalf of the City of Atlanta has registered with, is authorized to use and uses the federal work authorization program commonly known as E-Verify, or any subsequent replacement program, in accordance with the applicable provisions and deadlines established in O.C.G.A. § 13-10-91. Furthermore, the undersigned contractor will continue to use the federal work authorization program throughout the contract period and the undersigned contractor will contract for physical performance of services in satisfaction of such contract only with subcontractors who present an affidavit to the contractor with the information required by O.C.G.A. § 13-10-91(b). Contractor hereby attests that its federal work authorization user identification number and date of authorization are as follows:

_____ _____

Federal Work Authorization User Identification Number Date of Authorization

Name of Contractor: _____

Name of Project: _____

Name of Public Employer: City of Atlanta

I hereby declare under penalty of perjury that the forgoing is true and correct.

Executed on _____, ____, 20__ in _____ (city), _____ (state)

_____

Signature of Authorized Officer or Agent

_____

Printed name and Title of Authorized Officer or Agent

SUBSCRIBED AND SWORN BEFORE
ME ON THIS THE ___, DAY OF _____, 201_____

_____

NOTARY PUBLIC
My Commission Expires: _____

Subcontractor Affidavit under O.C.G.A. § 13-10-91(b)(3)

By executing this affidavit, the undersigned subcontractor verifies its compliance with O.C.G.A. § 13-10-91, stating affirmatively that the individual, firm or corporation which is engaged in the physical performance of services under a contract with (_____ (name of contractor)) on behalf of the City of Atlanta has registered with, is authorized to use and uses the federal work authorization program commonly known as E-Verify, or any subsequent replacement program, in accordance with the applicable provisions and deadlines established in O.C.G.A. § 13-10-91. Furthermore, the undersigned subcontractor will continue to use the federal work authorization program throughout the contract period and the undersigned subcontractor will contract for the physical performance of services in satisfaction of such contract only with sub-subcontractors who present an affidavit to the subcontractor with the information required by O.C.G.A. § 13-10-91(b). Additionally, the undersigned subcontractor will forward notice of the receipt of an affidavit from a sub-subcontractor to the contractor within five business days of receipt. If the undersigned subcontractor receives notice of receipt of an affidavit from any sub-subcontractor that has contracted with a sub-subcontractor to forward, within five business days of receipt, a copy of such notice to the contractor. Subcontractor hereby attests that its federal work authorization user identification number and date of authorization are as follows:

_____ _____

Federal Work Authorization User Identification Number Date of Authorization

Name of Subcontractor: _____

Name of Project: _____

Name of Public Employer: City of Atlanta

I hereby declare under penalty of perjury that the forgoing is true and correct.

Executed on _____, ____, 20__ in _____ (city), _____ (state)

_____

Signature of Authorized Officer or Agent

_____

Printed name and Title of Authorized Officer or Agent

SUBSCRIBED AND SWORN BEFORE
ME ON THIS THE ___, DAY OF _____, 201_____

_____

NOTARY PUBLIC
My Commission Expires: _____

Sub-subcontractor Affidavit under O.C.G.A. § 13-10-91(b)(4)

By executing this affidavit, the undersigned sub-subcontractor verifies its compliance with O.C.G.A. §13-10-91, stating affirmatively that the individual, firm or corporation which is engaged in the physical performance of services under a contract for (_____ (name of subcontractor or sub-subcontractor with whom such sub-subcontractor has privity of contract)) and (_____ (name of contractor)) on behalf of the City of Atlanta has registered with, is authorized to use and uses the federal work authorization program commonly known as E-Verify, or any subsequent replacement program, in accordance with the applicable provisions and deadlines established in O.C.G.A.§13-10-91. Furthermore, the undersigned sub-subcontractor will continue to use the federal work authorization program throughout the contract period and the undersigned sub-subcontractor will contract for the physical performance of services in satisfaction of such contract only with sub-subcontractors who present an affidavit to the sub-subcontractor with the information required by O.C.G.A. §13-10-91(b). The undersigned sub-subcontractor shall submit, at the time of such contract, this affidavit to (_____ (name of subcontractor or sub-subcontractor with whom such sub-subcontractor has privity of contract)). Additionally, the undersigned sub-subcontractor will forward notice of the receipt of any affidavit from a sub-subcontractor to (_____ (name of subcontractor or sub-subcontractor with whom such sub-subcontractor has privity of contract)). Sub-subcontractor hereby attests that its federal work authorization user identification number and date of authorization are as follows:

_____ _____

Federal Work Authorization User Identification Number Date of Authorization

Name of Contractor: _____

Name of Project: _____

Name of Public Employer: City of Atlanta

I hereby declare under penalty of perjury that the forgoing is true and correct.

Executed on _____, ____, 20__ in _____ (city), _____ (state)

_____

Signature of Authorized Officer or Agent

_____

Printed name and Title of Authorized Officer or Agent

SUBSCRIBED AND SWORN BEFORE
ME ON THIS THE ___, DAY OF _____, 201_____

_____

NOTARY PUBLIC

Material Type: Fabricated Metal and Precast Concrete Products
Item Number: 4003500
Revision Date: August 11, 2013

CITY OF ATLANTA SPECIFICATION FOR SEWER MANHOLE, CATCH BASIN, CAST IRON METER BOXES, SANITARY CLEANOUT BOXES, LIDS AND PRECAST REINFORCED CONCRETE MANHOLES

1. SCOPE AND CLASSIFICATION

1.1 Scope - This Specification describes Sewer Manhole, Catch Basins, Cast Iron Meter Boxes, Sanitary Cleanout Boxes, Lids and Precast Reinforced Concrete Manholes for the City of Atlanta, Various Departments.

1.2 Classification – The material(s) shall be classified as follows:

GROUP	I	-	Sewer Manhole and Catch Basin Castings
GROUP	II	-	Cast Iron Meter Boxes (Department of Watershed Management)
GROUP	III	-	Cleanout Boxes and Lids
GROUP	IV	-	Precast Reinforced Concrete Manholes

2. NOTES

IMPORTANT: INSTRUCTIONS TO ALL BIDDERS:

The City may consider valid only those bids, which comply with these instructions:

2.1 At numbered specific requirement section, all bidders must insert "Compliance" or "Exception" in each space provided.

2.2 Bidder "exceptions", further clarification, or notes must be detailed in these spaces or on an additional sheet referencing the numbered specification paragraph.

FIRM NAME_____ **SIGNATURE**_____

_____

_____

_____

2.3 Report of Purchases - An itemized (monthly) report of all purchases made during the first nine (9) months of this contract is required to be submitted to the Chief Procurement Officer during the tenth (10th) month of this contract. Failure to submit "Report of Usage" may result in forfeiture of future contracts with the City of Atlanta.

2.4 The equipment to be furnished must be currently on production and shall be manufacturer's standard model complete with all standard equipment. When cost effective and consistent with operational needs of the department, all energy consuming equipment purchased will be energy efficient, defined as meeting either Energy Star specification of criteria that puts products in the upper 25% of energy efficiency, as well as meeting quality, performance and durability requirements.

2.5 All bidders must submit two (2) sets of descriptive literature (If applicable) plainly marked with:

A - Company Name

B - Group to which literature pertains for each item and components bid.

2.6 This Invitation for Bid covers parts and service for one (1) year after delivery date. Bidder must submit price information for parts and service indicating schedule or rate of discount, which shall apply to the City of Atlanta.

2.7 Bidder (where applicable) must be able to supply ninety percent (90%) of parts required to maintain this equipment within 24 hours and have access to the remaining ten percent (10%) of parts within 72 hours.

2.8 Bidders will supply original manufacturer part crossover numbers for parts, which are not manufactured by the equipment manufacturer after the award of bid but prior to the delivery of equipment.

2.9 Successful bidder (where applicable) must provide a minimum of four (4) hours instruction in the proper and safe use of the equipment.

2.10 Successful bidder must provide parts, service and operating manuals for each unit provided.

FIRM NAME_____ **SIGNATURE**_____

2.11 Reserved.

2.12 Without expressed or implied obligation on the part of the City of Atlanta to perform, the bidder may submit an option to the City for a multi-year purchase concept covering three (3) years' service and parts for equipment covered by this bid. State provisions of the multi-year purchase option including terms, price and expiration date. Attach a separate sheet.

2.12.1 The Code of Ordinance of the City of Atlanta specifically prohibits obligating the City for future budget years.

2.12.2 In the event options are exercised to purchase units in subsequent years the provisions as related to parts and services will apply as indicated above.

2.13 The City of Atlanta reserves the right to increase or decrease quantities shown without penalty.

2.14 Quantities - None of the various agencies, either individually or collectively, will be required to purchase any minimum amount during the term of this contract, nor will they be limited, either individually or collectively, to any maximum amount during the term of this contract.

2.15 Any quantities remaining undelivered may be automatically canceled at expiration of contract or purchase order.

2.16 The City prefers to make a single award for all of the items listed. Separate awards may be made by group or by line item, if it appears to be in the best interest of the City to do so.

2.17 Default - The contract may be canceled or annulled by the Chief Procurement Officer in whole or in part by written notice of default to the vendor upon non-performance or violation of contract terms. An award may be made to the next lowest bidder or articles specified may be purchased on the open market similar to those so terminated. In either event, the defaulting vendor (or his/her surety) shall be liable to the City for costs to the City in excess of the defaulted contract prices provided that the vendor shall continue the performance of this contract to the extent not terminated under the provision of this clause. Failure of the vendor to deliver materials or services within the time stipulated on their bid, unless extended in writing by the Chief Procurement Officer, shall constitute contract default.

2.18 Escalation/De-Escalation Clause - Preference shall be given to the bidder submitting the lowest and best firm price as their bid. Should it be found that due to unusual market conditions it is to the best interest of the City of

Atlanta to accept a price with an escalation/de-escalation clause, the following shall apply:

2.18.1 The contract price shall be frozen for a specified period. This period must be shown on your bid.

2.18.2 Escalation - Cost data to support any proposed increase must be submitted to the Chief Procurement Officer of the Department of Procurement not less than thirty (30) days prior to the effective date of any such requested price increase.

2.18.3 Any adjustment allowed shall consist only of bona fide cost increases resulting from such situations as unforeseen raw material cost increase which may be passed on to the consumer.

2.18.4 No adjustment shall be made to compensate a supplier for inefficiency in operation, or for additional profit.

2.18.5 De-Escalation – In the event that market media indicators show that the prices for those materials, goods or services have overall decreased but the vendor has failed to pass the price decrease onto the City, the City reserves the right to place the vendor in default for cause, cancel the awarded contract, remove the vendor from the City of Atlanta Bidders List for a period deemed suitable to the City, and recuperate any damages from the vendor.

2.19 Evaluation Criteria - Listed below are the criteria used to evaluate bids for the City of Atlanta. These criteria will carry as much weight as Low Bid so that the City of Atlanta, in evaluating bids will be able to determine the "Lowest Complete and Satisfactory Bidder" which will be in the best interest of the City. The criteria are as follows:

a. Conformance to Specification
b. Low Bid
c. Price
d. Training - (Amount of Hours and Level Offered)
e. Parts Availability - (Local Source)
f. Capability - of unit (s) offered to perform the tasks of the User Department(s). Field Demonstrations may be requested to insure that the equipment meets User and Engineering Specifications.
g. Financial Capability
h. Discount Offered
i. Freight Charges
j. Delivery Time
k. Warranty
l. Vendor Past Performance

FIRM NAME_____ **SIGNATURE**_____

m. Vendor Availability to Perform

n. Vendor Reference - Vendor shall submit three (3) references from individuals, entity or corporation for which a similar project was successfully completed within time and budget. Also to be of consideration in the evaluation of bid is the vendor's past performance of this contract/supply bid. **(Please see final page of this specification for Vendor Reference form)**

2.20 Will your company accept a portion of this contract? Please check in the appropriate space. _____ yes _____ no

2.21 Reserved.

2.22 Brand Name or Trade Name Instructions - If items in this Invitation for Bid have been identified, described or referenced by a brand name or trade name description, such identification is intended to be descriptive, but not restrictive and is to indicate the quality and characteristics of products that may be offered. Products may be considered for award if such products are clearly identified in the bids and are determined by the City of Atlanta to meet its needs in all respects.

2.22.1 All bidders, including bidders whose products may be referenced, shall clearly indicate manufacturer/trade name and identifying number in space provided within Pricing Sheet of this Invitation for Bid.

2.22.2 If the bidder proposes to furnish another product, such products shall be clearly identified in the bid. The evaluation of bids and the determination as to equality of products offered shall be the responsibility of the City and will be based on information furnished by the bidder. Accordingly, to insure that sufficient information is available the bidder may be required to submit literature and/or samples prior to award. These shall be supplied within seven days, if required.

2.22.3 The purchase of any item by the City as a result of this Invitation for Bid is not a judgment of one product against another. Consideration of application, need and price will constitute purchase determination.

2.23 Alternate Bid – Bidders, who have other items they wish to offer in lieu of or in addition to that required by this Contract, should submit a separate Bid marked "ALTERNATE BID FOR BID NO. 7716-BL" Alternate Bids will automatically be deemed non-responsive and will not be considered for award of the subject Contract. Such bids however, may be examined prior

to award the subject Contract and may result in either cancellation of all bids to permit rewriting of the Specifications to include the alternate item in a rebid or the alternate item may be considered for future requirements.

2.24 A careful and accurate account of labor, including the name(s) or identification of mechanic(s), helper(s), etc. and the hours of work applied to each job, listing actual parts used in the performance of each job, description of the City equipment as well as parts only purchased under this contract is to be maintained by the vendor for a period of not less than one year. Such account or record may be subject to audit by an authorized City official.

2.25 Invoices must be itemized to show hours of labor, parts, materials, accessories with unit price and extension, including the applicable purchase order number.

2.26 Audit - The vendor shall maintain all books, documents, papers and records pertaining to this contract and to make such books and records available for inspection and auditing, upon reasonable notice by the City. As a result of any such audits, overcharges will be adjusted and compensation made by the vendor as applicable under this contract. Such books and records shall be maintained and made available for inspection and auditing for the duration of this contract and for a period of not less than three (3) years after the expiration date of contract.

3. REQUIREMENTS

3.1 Definition - For the purpose of this bid, "Parts" shall be defined as components of a unit to be provided by the vendor to the City. "Service" shall be defined as the furnishing of labor time or effort by a vendor, to repair or rebuild (where applicable), a part, component, or (where applicable), the unit/item as a whole.

3.2 All castings shall conform to the standard dimension on file in the office of the Department of Watershed Management and furnished with this proposal.

_____ _____
Compliance Exception

3.2.1 Copies of relevant drawings of City of Atlanta Standard Castings are attached herewith.

_____ _____
Compliance Exception

FIRM NAME_____ **SIGNATURE**_____

3.3 All castings furnished shall be free from injurious defects. Surface of the castings shall be free from fused-on sand and shall be reasonably smooth. They shall be of uniform quality, free from blowholes, porosity, hard spots, shrinkage distortion or other defects. They shall be well cleaned and runners, risers, fins, and other cast-on pieces shall be removed.

_____ _____
Compliance Exception

3.3.1 All components shall fit together in a satisfactory manner. Frames and covers or grates shall not rock or rattle under traffic.

_____ _____
Compliance Exception

3.4 GROUP I:
All castings furnished under Group I shall be either gray iron in accordance with ASTM A48 Class 30 (or its latest revision) or ductile iron in accordance with ASTM A536 Grade 60-40-18.

_____ _____
Compliance Exception

3.5 GROUP II:
Castings under Group II shall strictly conform to ASTM A48-48 Class 20 ASTM C104-53 or their latest revisions.

_____ _____
Compliance Exception

3.5.1 Castings under Group II after completion shall be coated inside and outside with coal or tar pitch varnish in accordance with applicable sections of AWWA C104-53 or its latest revision.

_____ _____
Compliance Exception

3.6 Coating shall be applied cold and shall thoroughly cover all metal. Coating shall be smooth, glossy, and shall not brittle under low temperature nor become sticky when exposed to the sun or heat source and shall adhere to metal all temperatures.

_____ _____
Compliance Exception

FIRM NAME_____ **SIGNATURE**_____

3.7 Vendor's shall be required to provide lettering 1" high raised ¼" from face **"PROPERTY OF CITY OF ATLANTA"** on the following:

3.7.1 STD Manhole Casting Lid.
3.7.2 STD Manhole Casting with Solid Top Lid.
3.7.3 Light Casting Cover for Precast Slabs (Lid).
3.7.4 STD Catch Basin Casting Lid.

_____ _____
Compliance Exception

3.8 GROUP III:
Sanitary Cleanout Box lettering shall read **"SAN. SEWER CLEANOUT"**

_____ _____
Compliance Exception

3.9 GROUP IV:
Precast Reinforced Concrete Manholes (size 12" through 48") shall comply with ANSI/ANTM CH78-79; for dimension refer to the enclosed drawing.

_____ _____
Compliance Exception

3.10 If you quote, please sign each "Bid Sheet" in blue ink, DO NOT 'white out' entries or your bid may be deemed non-responsive. And, put the name of your company on each of the bid sheets or your bid may be deemed non-responsive.

_____ _____
Compliance Exception

3.11 Submit the original and one (1) copy of the bid and required attachments.

_____ _____
Compliance Exception

3.12 Vendor shall provide like and similar goods not listed on pricing sheets at _____% discount from standard industry rates.

_____ _____
Compliance Exception

FIRM NAME_____ **SIGNATURE**_____

4. APPLICABLE DOCUMENTS, STANDARDS AND SPECIFICATIONS

4.1 The following document (s), standard (s) or specifications shall apply:

4.1.1 ASTM A 30; A48-74 Class 20 and 30; A 438-25-E; A536 Grade 60-40-18; AWWA C104-53 or their latest revision.

4.1.2 ANSI/ASTM C478-79.

5. QUALITY ASSURANCE PROVISIONS

5.1 Test and Inspection -It shall be the vendor's responsibility to perform all tests and inspections required by this specification unless otherwise stated in the purchase order, data sheet, and/or contract. The vendor may use in the process their own facility or any recognized independent laboratory acceptable to the City of Atlanta. The City of Atlanta reserves the right to perform any of the tests and inspection requirements where such tests and inspections are needed to further determine compliance with this specification.

5.2 Certification - It shall be the vendor's responsibility to submit, in lieu of the certification, a Compliance Certificate. Full acceptance of the materials shall be subject upon findings of suitability as determined under Section 5.1.

5.3 Sampling - Sample, visual test and inspection may be required. This shall be performed and witnessed in the presence of the City officials at no extra cost. Failure to comply with this provision may cause rejection of the items supplied and cancellation of the contract.

5.4 Quality and Quantity Control - A system of test and inspection shall be used to insure receipt of the quality and quantity of items supplied. Goods will be promptly unpacked and inspected; any discrepancies from purchase order or supplier invoice will be reported immediately to the Chief Procurement Officer of the Department of Procurement.

5.5 Plant and Facility Inspections - The Department of Procurement may require the vendor to make their plant and facilities available for inspection, or may require additional information concerning the vendor's ability to comply with the requirements of this specification, or its ability to perform in accordance with delivery requirements and within budget. In addition to the above, vendor may be required to produce shop orders and backlog orders documentation. Failure to comply with this requirement may cause rejection of the bid package.

FIRM NAME_____ **SIGNATURE**_____

5.6 Protection - The vendor shall assume all costs arising from the use of patented materials, devices, or processes incorporated in the materials furnished. The vendor further agrees to indemnify and hold harmless the City of Atlanta and its duly authorized agents from suits of law or actions of any nature for or on account of the use of any patented materials, equipment devices or processes.

5.7 Travel Expense - The City of Atlanta may require one or more visits to the vendor's plant to assure compliance with the City requirement. The cost of such visits shall be absorbed by the supplier after the purchase order has been assigned.

6. PREPARATION FOR DELIVERY

6.1 Packing - Packing shall be accomplished in accordance with acceptable commercial practices for domestic shipments, unless otherwise stated in the contract or purchase order. The vendor shall make shipments using the minimum number of containers consistent with the requirements of safe transit, available mode of transportation and routing. It shall be the vendor's responsibility to determine that packing is adequate to assure that all materials shall arrive at destination in an undamaged condition ready for intended use.

6.2 Marking - All packages shall be identified with the City of Atlanta purchase order number and the using Bureau. Sealed packing lists must be affixed to all cartons showing its content.

6.3 Shipping - The vendor shall follow shipping instructions as stated on the purchase order or contract.

6.4 Delivery Schedule and Liability - It shall be the vendor's responsibility to maintain delivery schedule as stated on bid. The City must be notified of any change at least ten (10) days prior to original delivery date. Notification of shippage, however, shall not relieve the vendor from late delivery penalties as outline below. The vendor is urged to realistically and accurately state its proposed delivery for the items called for in the Invitation for Bid Pricing Sheet.

Split delivery may be accepted, if it is found to be in the best interest of the City but shall not be made in quantities of less than fifty percent (50%) of the total purchase order or contract quantity.

The vendor shall not, for any reason, delay delivery of items necessary to the upkeep of the City. The City of Atlanta reserves the right to enforce a Late Delivery Penalty to a delinquent vendor. Late delivery penalties are in the amount of one percent (1%) for each day of delay to a maximum of five

percent (5%) of the total purchase order or contract amount beginning after a ten (10) day grace period from the expired delivery date.

7. **WARRANTY**

It shall be the vendor's responsibility to submit, at time of shipment, the original manufacturer's warranty of the materials(s) supplied.

8. **GUARANTEE**

The material shall be guaranteed to be free from defects of construction, conception and workmanship for a period of at least twelve (12) months from date of acceptance. Any part or portion found not in accordance with this specification will be rejected and returned to vendor at vendor's expense for immediate replacement.

9. **FACE SHEET AND ALL PAGES OF THIS SPECIFICATION, SIGNED BY AN AUTHORIZED REPRESENTATIVE, MUST BE RETURNED WITH YOUR BID; OTHERWISE BID MAYBE CONSIDERED INVALID.**

10. **IF YOU DO NOT QUOTE, PLEASE RETURN THE COVER SHEET WITH YOUR COMPANY NAME AND THE REASONS YOU ARE NOT QUOTING. OTHERWISE, AFTER THREE (3) NO RESPONSES YOUR COMPANY'S NAME MAY BE REMOVED FROM OUR VENDOR LIST.**

11. **A COMPLETE CONTRACT EMPLOYMENT REPORT OR CURRENT LETTER OF CERTIFICATION FROM THE CITY OF ATLANTA MUST ACCOMPANY EACH BID. FAILURE TO COMPLY WILL RENDER BID INVALID.**

12. **IF YOU QUOTE, PLEASE SIGN EACH "BID SHEET" IN BLUE INK, DO NOT 'WHITE OUT' ENTRIES OR YOUR BID MAY BE DEEMED NON-RESPONSIVE. AND, PUT THE NAME OF YOUR COMPANY ON EACH OF THE BID SHEETS OR YOUR BID MAY BE DEEMED NON-RESPONSIVE.**

13. **SUBMIT THE ORIGINAL AND ONE (1) COPY OF THE BID AND REQUIRED ATTACHMENTS.**

FIRM NAME_____ **SIGNATURE**_____

VENDOR REFERENCES

PROJECT TYPE: MATERIALS ITB/FC NO.: 7716-BL BUYER/CO: BRANDI LENNON

PROJECT NAME: SEWER MANHOLE, CATCH BASIN, CAST IRON METER BOXES, SANITARY CLEANOUT BOXES, LIDS, AND PRECAST REINFORCED CONCRETE MANHOLES

Department of Procurement employees cannot be listed as a Vendor Reference.

****

1. _____
Company Name Contact Person

_____
Address City/State/Zip

_____
Phone Number County

COMMENTS: _____

_____

2. _____
Company Name Contact Person

_____
Address City/State/Zip

_____
Phone Number County

COMMENTS: _____

_____

3. _____
Company Name Contact Person

_____
Address City/State/Zip

_____
Phone Number County

COMMENTS: _____

_____

FIRM NAME_____ **SIGNATURE**_____

Revised: 01/16/2013

CITY OF ATLANTA
DEPARTMENT OF PROCUREMENT
55 TRINITY AVENUE, SW, SUITE 1900
ATLANTA, GEORGIA 30303-0307
(404) 330-6204

PRICING SHEET
BID NUMBER
7716-BL

		QUAN.	UNIT PRICE	TOTAL

****

NOTE TO ALL BIDDERS

IN COMPLIANCE WITH THE REQUIREMENTS OF THIS SPECIFICATION (IF APPLICABLE), VENDOR MUST SUBMIT WITH BID TWO (2) SETS OF DESCRIPTIVE LITERATURE OR <u>YOUR BID MAY NOT BE CONSIDERED</u>.

Bids shall be held firm for 120 days after bid opening date and time.

Further, prices shall be held fixed for one year from date of award.

Quantities listed are estimates, actual orders may vary more or less than indicated.

****

GROUP I - SEWER MANHOLE AND CATCH BASIN CASTINGS

1.	Standard manhole casting, cast iron machined, complete with frame and perforated cover, ASTM designation A48, Class 30; MHI14	250	$ _____ ea.	$ _____
2.	Standard manhole cover only, perforated cast iron, ASTM designated A48, Class 30; MH14	100	$ _____ ea.	$ _____
3.	Standard manhole cover only, without perforations, cast iron, ASTM designation A48, Class 30; MH15	300	$ _____ ea.	$ _____
4.	Standard manhole casting iron machined, complete with frames, cover gasket, a and cap screws, for use in flood hazard areas ASTM designation A48, Class 30 Neenah R-1915-C or approved equal; MH16	100	$ _____ ea.	$ _____

FIRM NAME _____

SIGNATURE _____ ____/____/____
DATE

TITLE _____

CITY OF ATLANTA
DEPARTMENT OF PROCUREMENT
55 TRINITY AVENUE, SW, SUITE 1900
ATLANTA, GEORGIA 30303-0307
(404) 330-6204

PRICING SHEET
BID NUMBER
7716-BL

		QUAN.	UNIT PRICE	TOTAL
5.	Standard manhole steps, cast iron, ASTM designation A48-76, Class 30 or Neenah R1981-J or approved equal; MH18	100	$ _____ea.	$ _____
6.	Catch basin cover only, perforated, cast iron ASTM designated A48, Class 30; CB10	100	$ _____ea.	$ _____
7.	Catch basin castings, complete with frame and perforated cover, cast iron, ASTM-48, Class 30 "Standard Cast Basin Casting"; CB10	250	$ _____ea.	$ _____
8.	Catch Basin casting, "Heavy Duty" complete with covers, Ductile IRon, ASTM A536, Grade 60-40-18; CB11	100	$ _____ea.	$ _____
9.	Complete units, grates and frames, "Type A", cast iron, ASTM-A48, Class 30; CB14	100	$ _____ea.	$ _____
10.	Grates only, "Type A" cast iron, ASTM-A48, Class 30; CB14	100	$ _____ea.	$ _____
11.	Frames only, "Type A", cast iron, ASTM A-48, Class 30; CB14	100	$ _____ea.	$ _____
12.	Complete units, grates and frames, "Type B", cast iron ASTM-A48, Class 30; CB12	100	$ _____ea.	$ _____
13.	Grates only, "Type B", cast ASTM-A48, Class 30; CB13	100	$ _____ea.	$ _____
14.	Frames only ""Type B", cast iron, ASTM-A48, Class 30; CB13	100	$ _____ea.	$ _____
15.	Light castings, frames and covers for precast slabs, cast iron, ASTM-A48, Class 30; MH17	100	$ _____ea.	$ _____

FIRM NAME _____

SIGNATURE _____ ____/____/____
DATE

TITLE _____

CITY OF ATLANTA
DEPARTMENT OF PROCUREMENT
55 TRINITY AVENUE, SW, SUITE 1900
ATLANTA, GEORGIA 30303-0307
(404) 330-6204

PRICING SHEET
BID NUMBER
7716-BL

		QUAN.	UNIT PRICE	TOTAL
16.	Catch basin castings, Hood Type "Modified", cast iron ASTM-A48 Class 30; CB12	100	$ _____ ea.	$ _____
17.	Bike safety grates, and frames cast iron, ASTM-A48, Class 30; CB15	100	$ _____ ea.	$ _____
18.	BIke safety grates only; CB15	100	$ _____ ea.	$ _____
19.	Bike safety frames only; CB15	100	$ _____ ea.	$ _____
	TOTAL SUM GROUP I (Est. Quantities)		$ _____	
	State Manufacturer		_____	
	State Location of plant from which deliveries will be made.		_____	
	GROUP II - CAST IRON METER BOXES			
	Nomenclature: Bidder shall list manufacturer and identifying number, as applicable, of units bid in space provided.			
	ROUND			
1.	22", per Dwg. No. T-8 (1), revised 5-26-69 complete.	250	$ _____ ea.	$ _____
	SQUARE			
2.	18" X 24", sidewalk type, per Dwg. A-22 No. T-13 (4), revised 3-19-68, complete.	500	$ _____ ea.	$ _____
3.	Lids only for above.	250	$ _____ ea.	$ _____
4.	18" X 24" Traffic type, per Dwg. No. T-3(1), A-23 revised 3-29-68, complete.	50	$ _____ ea.	$ _____
5.	Lids only for above.	50	$ _____ ea.	$ _____

FIRM NAME _____

SIGNATURE _____ ____/____/____
DATE

TITLE _____

CITY OF ATLANTA
DEPARTMENT OF PROCUREMENT
55 TRINITY AVENUE, SW, SUITE 1900
ATLANTA, GEORGIA 30303-0307
(404) 330-6204

		QUAN.	UNIT PRICE	TOTAL
	TOTAL SUM GROUP II (Est. Quantities)		$_____	
	State Manufacturer		_____	
	State Location of plant from which deliveries will be made.		_____	
	GROUP III - CLEANOUT BOXES AND LIDS			
1.	Sanitary Cleanout Boxes A.S. T. M. Specification A48, Class 20.	300	$ _____ ea.	$ _____
2.	Lids only for above.	300	$ _____ ea.	$ _____
	TOTAL SUM GROUP III (Est. Quantities)		$_____	
	State Manufacturer		_____	
	State Location of plant from which deliveries will be made.		_____	
	GROUP IV – PRECAST REINFORCED CONCRETE MANHOLES			
1.	48" sections of precast concrete manholes, straight wall, city standard	50 ea.	_____	_____
2.	24" sections precast concrete manholes, straight wall, city standard	30 ea.	_____	_____
3.	12" sections precast concrete manhole, straight wall, city standard	25 ea.	_____	_____
4.	Concrete cone tops, 24" vertical height, all to be 48" diameter, city standard	50 ea.	_____	_____

FIRM NAME _____

SIGNATURE _____ ___/___/___
DATE

TITLE _____

CITY OF ATLANTA
DEPARTMENT OF PROCUREMENT
55 TRINITY AVENUE, SW, SUITE 1900
ATLANTA, GEORGIA 30303-0307
(404) 330-6204

PRICING SHEET
BID NUMBER
7716-BL

	QUAN.	UNIT PRICE	TOTAL
TOTAL SUM GROUP IV (Est. Quantities)		$_____	
State Manufacturer		_____	
State Location of plant from which deliveries will be made.			
TOTAL ALL GROUPS I, II, III & IV		$_____	

YOU MUST CHECK ONE

_____ _____
Compliance **Exception**

Prices will remain fixed for 12 months.

FIRM NAME _____

SIGNATURE _____ /____/____
DATE

TITLE _____

CITY OF ATLANTA
DEPARTMENT OF PROCUREMENT
55 TRINITY AVENUE, SW, SUITE 1900
ATLANTA, GEORGIA 30303-0307
(404) 330-6204

PRICING SHEET
BID NUMBER
7716-BL

	QUAN.	UNIT PRICE	TOTAL

EXTENSIONS, TOTALS AND GRAND TOTAL, IF APPLICABLE, SHALL BE ENTERED IN SPACES PROVIDED. FAILURE TO COMPLY MAY RENDER YOUR BID INVALID.

DELIVERY MAY BE A FACTOR IN AWARD. PLEASE STATE DELIVERY SCHEDULE IN SPACE PROVIDED BELOW. FAILURE TO COMPLY MAY RENDER YOUR BID INVALID.

TERMS: BIDDERS ARE REQUESTED TO QUOTE NET PRICES. NET PRICES ARE LIST PRICES LESS TRADE OR OTHER DISCOUNTS OFFERED, EXCEPT CASH DISCOUNTS. IF A CASH DISCOUNT IS OFFERED, IT MUST BE CLEARLY SHOWN IN THE SPACE PROVIDED BELOW. IN ORDER FOR YOUR CASH DISCOUNT TO BE CONSIDERED IN THE BID EVALUATION PROCESS, THE DISCOUNT PERIOD SHALL BE A MINIMUM OF THIRTY DAYS. ANY DISCOUNT PERIOD OFFERED OF LESS THAN THIRTY DAYS WILL NOT BE CONSIDERED IN THE BID EVALUATION PROCESS. ALL DISCOUNTS OFFERED WILL BE TAKEN IF EARNED. TIME WILL BE COMPUTED FROM THE DATE OF ACCEPTANCE AT DESTINATION OR FROM DATE A CORRECT INVOICE IS RECEIVED IF THE LATTER DATE IS LATER THAN THE DATE OF ACCEPTANCE.

****

Upon request, a copy of the bid tabulation will be made available at a cost of $ .25 per page.

****

IF FEDERAL EXCISE TAX APPLIES, SHOW AMOUNT OF SAME WHICH HAS ALREADY BEEN DEDUCTED IN DETERMINING YOUR NET PRICE. THE CITY IS ALSO EXEMPT FROM STATE AND LOCAL SALES TAX (UNLESS THIS AMOUNT IS SHOWN, TAX EXEMPTION CERTIFICATE CANNOT BE ISSUED AND VENDOR WILL BE RESPONSIBLE FOR PAYMENT OF TAX ON NET PRICE QUOTED).

TERMS _____ % _____ 30 Days

DELIVERY: Time Required for Delivery After Receipt Order _____ Days

FIRM NAME _____

SIGNATURE _____ / ____ / ____
DATE

TITLE _____

M-02

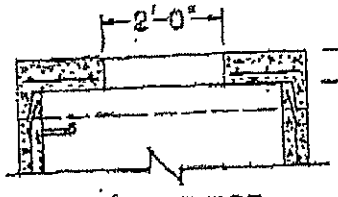

STD. FLAT TOP

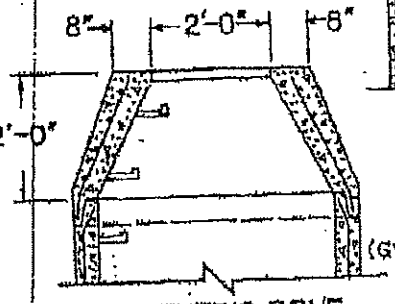

CONCENTRIC CONE

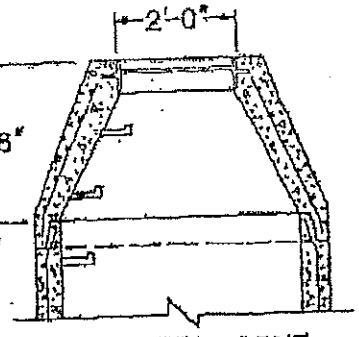

CONCENTRIC CONE WITH CAST-IN RING AND COVER (GWINNETT COUNTY STANDARD)

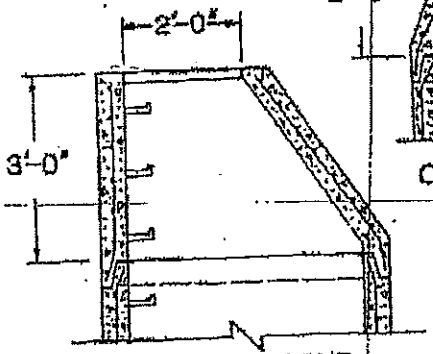

ECCENTRIC CONE

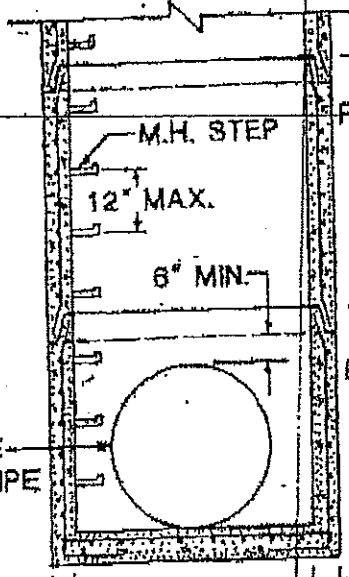

RISER SECTIONS
1'-0", 1'-6", 2'-0", 2'-6", 3'-0", 3'-6", 4'-0"

BASE SECTIONS
2'-0", 2'-6", 3'-0", 3'-6", 4'-0"

MANHOLE SECTIONAL DETAIL

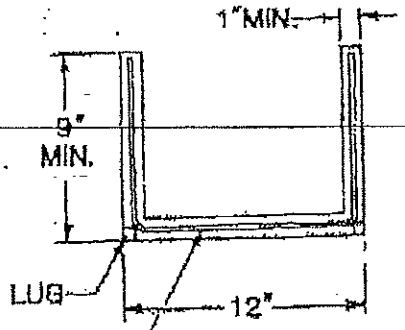

3/8" DIA. REINFORCING ROD ENCASED IN CORROSION-RESISTANT RUBBER OR PLASTIC

MIN. VERTICAL LOAD RESISTANCE : 400 LBS.

MIN. PULLOUT RESISTANCE : 700 LBS.

STEP DETAIL

48" Dia. Storm Manhole

Model: MH48Storm

Ring & Cover:

Varies per Customer Specs

Grade Ring:

Size I.D.	Weight
24" x 3"	66 lbs.
26" x 3"	71 lbs.

48" Dia. Flat Slab

Access	Weight
24"	1,414 lbs
26"	1,332 lbs

48" Dia. Cone

Access	Weight
24"	Varies
26"	Varies

48" Dia. Riser

H1	Weight	H1	Weight
12"	867 lbs	60"	4,336 lbs
18"	1,301 lbs	66"	4,770 lbs
24"	1,734 lbs	72"	5,203 lbs
30"	2,168 lbs	78"	5,637 lbs
36"	2,602 lbs	84"	6,070 lbs
42"	3,035 lbs	90"	6,504 lbs
48"	3,469 lbs	96"	6,938 lbs
54"	3,903 lbs		

48" Dia. Base

H2	Weight	H2	Weight
18"	2,816 lbs	48"	4,984 lbs
24"	3,250 lbs	54"	5,417 lbs
30"	3,682 lbs	60"	5,851 lbs
36"	4,117 lbs	66"	6,285 lbs
42"	4,550 lbs	72"	6,718 lbs

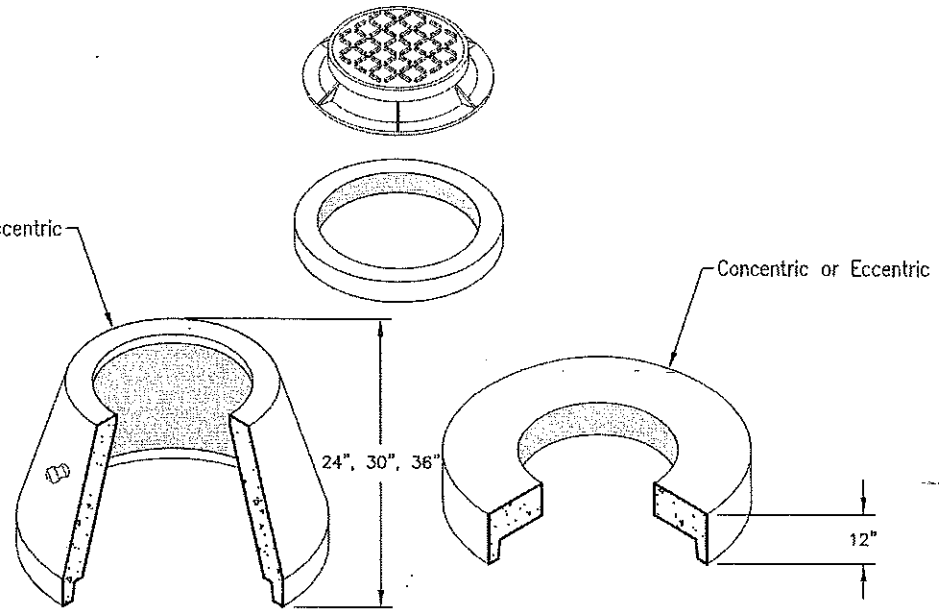

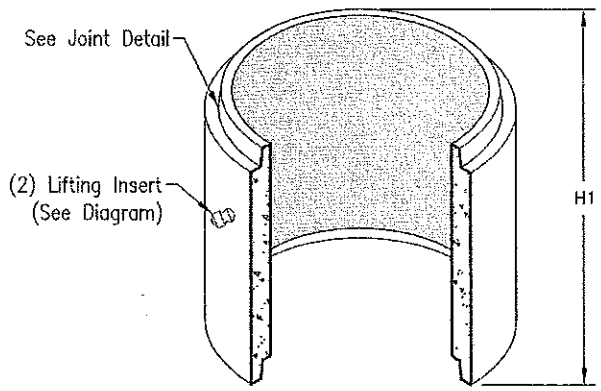

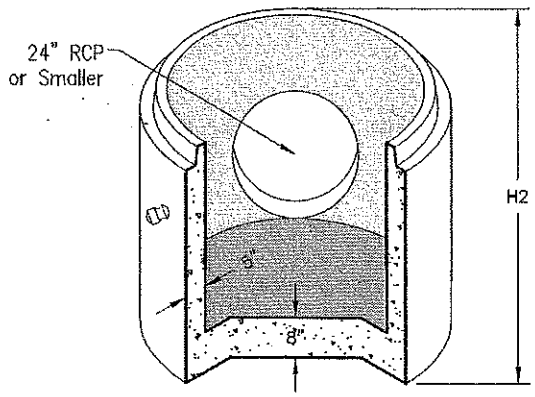

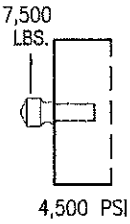

Lifting Capacity

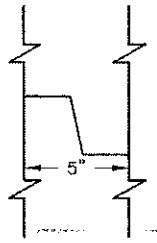

Joint Detail

GENERAL NOTES:

1. **Manhole walls, transition slabs, cones, tops and base sections meet or exceed the requirements of ASTM C-478.**
2. **Resilient connectors to be boots conforming to ASTM C-923 requirements.**
3. **Following coatings available upon request: Thane-Coat, Bitumastic, Tnemec**

© 2010 Oldcastle Precast, Inc.

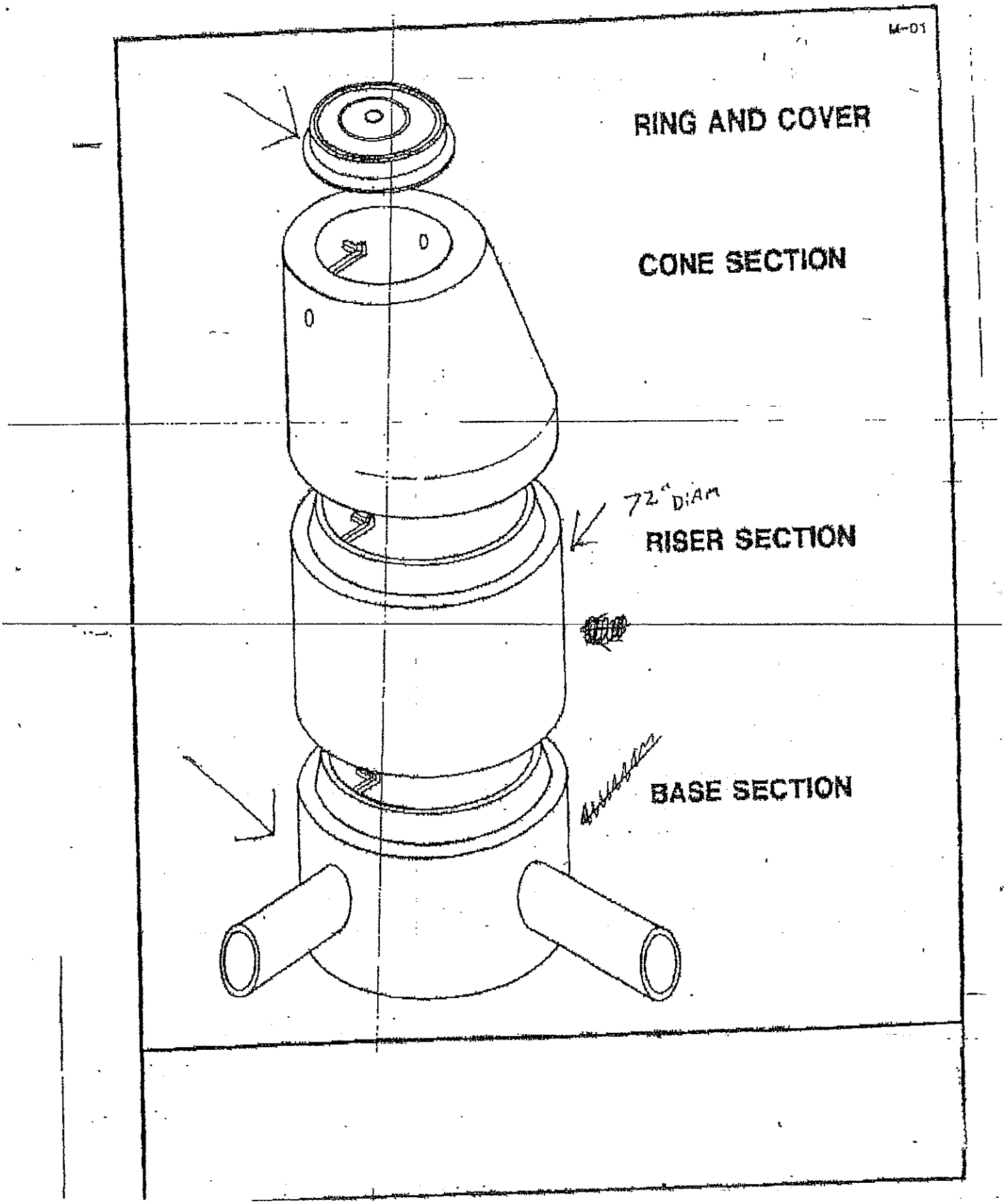
M-01
RING AND COVER
CONE SECTION
72" DIAM
RISER SECTION
BASE SECTION

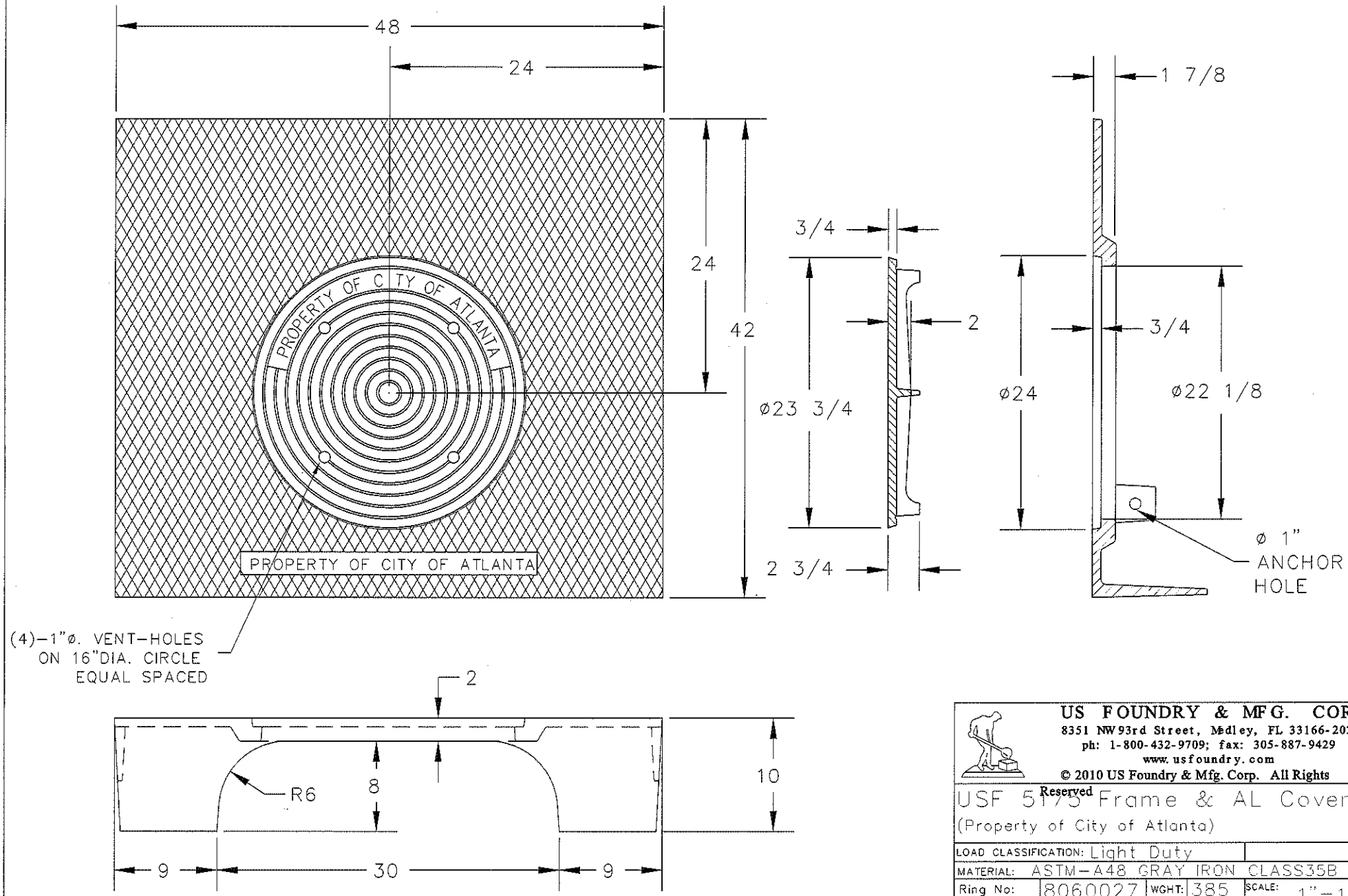

US FOUNDRY & MFG. CORP.
8351 NW 93rd Street, Medley, FL 33166-2025
ph: 1-800-432-9709; fax: 305-887-9429
www.usfoundry.com

© 2010 US Foundry & Mfg. Corp. All Rights Reserved

USF 5175 Frame & AL Cover
(Property of City of Atlanta)

LOAD CLASSIFICATION: Light Duty				
MATERIAL: ASTM–A48 GRAY IRON CLASS35B				
Ring No:	8060027	WGHT:	385	SCALE: 1"=1"
Cover No:	8010433		90	DATE: 3–15–05
				DWN. BY: ULS
UNLESS OTHERWISE NOTED WEIGHT IS IN POUNDS AND APPROXIMATED				
REV:	DATE:	REV BY:		QUOTE#