CITY OF ATLANTA

HARTSFIELD-JACKSON ATLANTA INTERNATIONAL AIRPORT

INVITATION TO BID

PROJECT NUMBER FC-8071

EXPLOSIVE DETECTION SYSTEM (EDS) RECAPITALIZATION AND OPTIMIZATION – NORTH DOMESTIC TERMINAL

MIGUEL SOUTHWELL
AVIATION GENERAL MANAGER
DEPARTMENT OF AVIATION

ADAM L. SMITH, ESQ., CPPO, CPPB, CPPM, CPP
CHIEF PROCUREMENT OFFICER
DEPARTMENT OF PROCUREMENT

CITY OF ATLANTA

Kasim Reed
Mayor

SUITE 1900
55 TRINITY AVENUE, SW
ATLANTA, GA 30303
(404) 330-6204 Fax: (404) 658-7705
Internet Home Page: www.atlantaga.gov

DEPARTMENT OF PROCUREMENT
Adam L. Smith, Esq., CPPO, CPPB, CPPM, CPF
CIPC, CISCC, CIGPM
Chief Procurement Officer
asmith@atlantaga.gov

July 29, 2015

ATTENTION INTERESTED BIDDER:

Your firm is hereby invited to submit to the City of Atlanta (the "**City**"), Department of Procurement (the "**DOP**"), a Bid for **Project Number: FC–8071, Explosive Detection System (EDS) Recapitalization and Optimization at Hartsfield-Jackson Atlanta International Airport.** The scope of services for this project will consist of the design, procurement and construction required to modify the Checked Baggage Inspection System in the Domestic North Terminal.

A **Pre-Bid Conference** will be held on **Tuesday, August 18, 2015, at 10:00 A.M., at the Hartsfield-Jackson Technical Support Campus, 1255 South Loop Road, College Park, Georgia 30337.** The purpose of the Pre-Bid Conference is to provide Bidders with detailed information regarding the Procurement process and to address questions and concerns. There will be representatives from the Department of Aviation, Risk Management and the Office of Contract Compliance available at the conference to discuss this project and to answer any questions. Attendance to the Pre-Bid Conference is strongly encouraged. An optional site tour is scheduled for **Tuesday, August 18, 2015**, immediately following Pre-bid Conference, departing from the Tech Campus, 1255 South Loop Road, College Park, Georgia 30337. *Bidders attending the site tour for this solicitation must submit their company name, attendee(s) name and phone number to the Department of Procurement no later than close of business on Monday, August 10, 2015 at 5:00 P.M.* Those attendees that have current airport badge must submit their information as well. Please submit this information to Mr. Leslie Page, Contracting Officer, via e-mail at lpage@Atlantaga.gov. All names will be submitted to Aviation Security for screening prior to the Site Tour.

The last date to submit questions will be **Friday, August 21, 2015, no later than 5:00 P.M.** Questions may be sent to **Mr. Leslie Page, Contracting Officer, via email at lpage@atlantaga.gov, or facsimile at 404-658-7705.** Questions will be responded to in the form of an addendum.

Your response to this Invitation to Bid **("ITB")** must be received by designated staff of the Department of Procurement at 55 Trinity Avenue, S.W., City Hall, Suite 1900, Atlanta, GA 30303, **no later than 2:00 P.M., on Wednesday, September 23, 2015.** Any Proposal received after this time will not be considered and will be rejected and returned.

Bids will be opened and read on **Wednesday, September 23, 2015, at 2:01 P.M.** in the Department of Procurement's Bid Conference Room, Suite 1900, 1st Floor, 55 Trinity Avenue, S.W., City Hall South, Atlanta, GA 30303.

This ITB is being made available by electronic means. If accepted by such means, then the Bidder acknowledges and accepts full responsibility to insure that no changes are made to the ITB. In the event of conflict between a version of the ITB in the Bidder's possession and the version maintained by the DOP, the version maintained by the DOP shall govern.

You are required to email and confirm receipt of your business name, contact person, address, phone number, fax number and the project number to Mr. Leslie Page, Contracting Officer, at lpage@atlantaga.gov, to be placed on the Plan Holders List. Failure to do so will prevent you from receiving any addenda that are issued and may deem you non-responsive.

If you have any questions regarding this project, please contact **Mr. Leslie Page, Contracting Officer, at 404-330-6107, or by email at lpage@atlantaga.gov.** Any questions regarding the procedures for purchasing a copy of the document or obtaining a copy of the plan holder's list should be directed to Jessica Boston, Administrative Assistance Senior, at 404-330-6903, or by e-mail at jaboston@atlantaga.gov.

The City reserves the right to cancel any and all solicitations and to accept or reject, in whole or in part, any and all Proposals when it is for good cause and in the best interest of the City.

Thank you for your interest in doing business with the City.

Sincerely,

Adam L. Smith

ALS:lhp

Directions to Technical Support Campus

1255 South Loop Road, College Park, Georgia 30337
404-530-5500 (main)

From Downtown Atlanta:

- Take I-75/I-85 South
- Continue on I-75 at the I-75/I-85 Split
- Exit 238B – I-285 West
- Stay in right lane and follow signs for Loop Road
- Bypassing exit for I-285 West, continue on Loop Road through traffic light
- The Tech Campus is the second building on the left (grey stone w/ blue awning)

From East Atlanta:

- Take I-285 South
- Get off I-285 at the I-75 exit.
- Follow signs to I-285 West/Clark Howell Hwy/ Loop Rd.
- Exit at Loop Rd.
- The Tech Campus is the second building on the left (grey stone w/ blue awning)

From South of Atlanta: (I-75)

- Take I-75 North
- Exit 238B - I-285 West
- Keep to the right and exit at Clark Howell Hwy / Loop Rd
- Follow signs for Loop Road, go through traffic light
- The Tech Campus is the second building on the left (grey stone w/ blue awning)

From Southwest of Atlanta: (I-85)

- I-85 North
- Exit 68 - I-285 Bypass, follow to I-285 East
- Exit 59 – Loop Road / Clark Howell Hwy /Airport Cargo
- Follow signs for Loop Road
- Bypass exit for I-285 West, staying in two right lanes to Loop Road
- Continue through traffic light
- The Tech Campus is the second building on the left (grey stone w/ blue awning)

From West of Atlanta:

- From I-20, take I-285 South
- Exit 59 – Loop Road / Clark Howell Hwy /Airport Cargo
- Follow signs for Loop Road
- Bypass exit for I-285 West, staying in two right lanes to Loop Road
- Continue through traffic light
- The Tech Campus is the second building on the left (grey stone w/ blue awning)

From the Airport:

- Take Airport Blvd toward I-85 North, stay in the right lane
- Exit Right onto North Inner Loop Rd.
- Continue on N Inner Loop Rd, crossing over Aviation Blvd, and road then becomes South Inner Loop Road.
- Stay on S Inner Loop Rd until you see the "Road Closed" signs.
- The Tech Campus is the second building on the left (grey stone w/ blue awning)

CITY OF ATLANTA
DEPARTMENT OF AVIATION
HARTSFIELD-JACKSON ATLANTA INTERNATIONAL AIRPORT

INVITATION TO BID
PROJECT NUMBER FC-8071
EXPLOSIVE DETECTION SYSTEM (EDS) RECAPITALIZATION AND OPTIMIZATION – NORTH DOMESTIC TERMINAL

TABLE OF CONTENTS

PART I

SECTION	TITLE
1.	Information and Instruction to Bidders
2.	Forms

- **Form 1: Illegal Immigration Reform and Compliance Act**
- **Form 2: Contractor Disclosure Form**
- **Form 3: Proponent Financial Disclosure (*NOT APPLICABLE FOR THIS INVITATION TO BID [ITB]*)**
- **Form 4A: Certification of Insurance**
- **Form 4B: Certification of Bonding Ability**
- **Form 5: Acknowledgement of Addenda**
- **Form 6: Bidder Contact Directory**
- **Form 7: Reference List (*NOT APPLICABLE FOR THIS ITB*)**
- **Form 8: Bid Bond**
- **Form 9: Essential Subcontractor Qualification Statement**
- **Form 10: AIP Grant Forms**
  - Major Shareholders Disclosure Affidavit
  - Bidder's Statement on Previous Contracts Subject to EEO Clause
  - Certification of Non-segregated facilities (Contractors / Subcontractors)
  - Certificate Regarding Debarment and Suspension (Bidder or Offeror)
  - Certificate Regarding Debarment and Suspension (Successful Bidder Regarding Lower Tier Participants)
  - Certification for Contracts, Grants, Loans, and Cooperative

Agreements
- Certificate Concerning Foreign Interest
- Certificate of Buy American Compliance for Total Facility (Buildings Such as Terminal, SRE, ARFF, ETC.)

PART II

1. **Agreement**

2. **Exhibit A – General Conditions**

3. **Exhibit B – Special Conditions**

4. **Exhibit C – Program Requirements**
   - C-1: Scope of Work and Technical Specifications
   - C-2: Other Transaction Agreements
   - C-3: List of Supplemental Documents
   - C-4: Contract Provisions for Airport Improvement Program
     - AIP Forms

5. **Exhibit D – Insurance and Bonding / Construction Safety and Health Plan**

6. **Exhibit E – Pricing Forms**

7. **Exhibit F – Schedule Requirements**

8. **Exhibit G – Quality Control Plan Requirements**

9. **Exhibit H – Work Plan**

10. **Exhibit I – Airport Security Requirements**

11. **Exhibit J – Performance Bond**

12. **Exhibit K – Payment Bond**

13. **Exhibit L – Claim/Disputes Procedures**

14. **Exhibit M – Statutory Lien Release for Design/Builder and Subcontractors**

15. Appendix A – Office of Contract Compliance

16. Appendix B – Contract Administration Forms

17. Appendix C – Wage Rates

PART I

INFORMATION AND INSTRUCTION TO BIDDERS

Part 1; Information and Instructions to Bidders

1. **Services Being Procured:** This Invitation to Bid ("**ITB**") to pre-qualified Bidders ("**Bidder" or "Bidders**") by the City of Atlanta ("**City**"), on behalf of its Department of Aviation ("**DOA**"), seeks to procure design and construction services ("**Services**") for its Explosive Detection System (EDS) Recapitalization and Optimization Project ("**Project**"). A more detailed Scope of Services sought in this procurement is set forth in Exhibit C, Scope of Work and Technical Specifications, attached to the Services Agreement ("**Services Agreement**"); **Contract No. FC-8071; Explosive Detection System (EDS) Recapitalization and Optimization – Domestic North Terminal**, included at Part 2 of this ITB. This ITB is extended only to the Bidders previously pre-qualified by the City for this specific Project.

2. **Method of Source Selection:** This procurement is being conducted in accordance with all applicable provisions of the City of Atlanta's Code of Ordinances, including its Procurement and Real Estate Code, and the particular method of source selection for the Services sought in this ITB is Code Section 2-1188; Competitive sealed bidding. By submitting a Bid concerning this procurement, a Bidder acknowledges that it is familiar with all laws applicable to this procurement, including, but not limited to, City's Code of Ordinances and Charter, which laws are incorporated into this ITB by reference.

3. **Minimum Qualifications:**

   3.1. Only the following Bidders, Daifuku Webb; Vanderlande Industries Inc.; and Skanska USA Building Inc., pre-qualified per **FC-7472** will be allowed to bid on this procurement.

   3.2. Each Bidder participating in this procurement must have and submit a valid Georgia General Contractor's License with its bid in full compliance with the Laws of the State of Georgia.

   3.3. The design, installation and implementation of all controls hardware and software shall be subcontracted to Brock Solutions, Inc. and will be designated as an essential subcontractor per Exhibit B, Special Conditions, Section SC-9.

   3.4. Any conveyor system subcontractor(s) (i.e., design and installation) is designated as an essential subcontractor(s) per Exhibit B, Special Conditions, Section SC-9 and must have and document (using Form 9, Essential Subcontractor Qualification Statement) prior successful design/build experience working on Transportation Security Administration (TSA) projects with in-line screening system matrix with six (6) or more EDS machines in a US airport. Resume of key staff shall be included.

   3.5. The electrical subcontractor is designated as an essential subcontractor per Exhibit B, Special Conditions, Section SC-9 and must have and document (using Form 9, Essential Subcontractor Qualification Statement) prior successful experience performing the

complete electrical installation of one TSA in-line screening system matrix with three (3) or more EDS machines in a US airport. The electrical subcontractor must possess a Georgia electrical contractor's license. Resume of key staff shall be included.

3.6. The Designer of Record shall have and document (using Form 9, Essential Subcontractor Qualification Statement) design experience on a minimum of three successful design TSA in-line screening system matrix projects associated with US airport baggage handling systems. The Designer of Record is designated as an essential subcontractor per Exhibit B, Special Conditions, Section SC-9. The Designer of Record must be a licensed architect or engineer in the State of Georgia. Resume of key staff shall be included.

4. **Security Sensitive Information** (SSI)**:** There is information within the provided documents that is Security Sensitive Information (SSI) as defined by the TSA and in 49CFR, Part 15 and 1520 which requires the **Bidders to strictly follow all appropriate TSA SSI guidelines which includes procedures for the handling, storing, using, distributing, transmitting and destroying of this information**. These supplemental documents will be given by the COA only to pre-qualified bidders who sign a COA non-disclosure agreement.

5. **Scope of Work:** The base scope of work will be the Recapitalization and Optimization of the Domestic North Terminal CBIS. Scope details are presented in Exhibit C. The following additive alternates are included in this ITB:

5.1. **Additive Alternate 1** – Contractor's cost for providing insurance for the base scope of work in accordance with Exhibit D.

5.2. **Additive Alternate 2** – Provide the Design and Construction of an Additional Non-Clear Conveyor Line in the Domestic North Terminal Checked Baggage Inspection System (CBIS).

5.3. **Additive Alternate 3 –** Provide the design and installation of one uninterrupted power supply (UPS) for each of 6 EDS machines in the Domestic North Terminal CBIS. UPS units provided by others.

The removal of the existing EDS machines along with providing and installing the new EDS machines will be by the TSA.

Bidders must include all associated direct and indirect costs in the bid for each additive alternate. The recommended schedule relationship of the base scope of work and each additive alternates shall be presented in the preliminary project schedule required with the Bids.

The additive alternates are independent and autonomous, therefore, any combination of the additive alternates may be selected by the City.

The Owner's selected and approved additive alternates to be included in the contract will be announced at the time of the Intent to Award Contract.

6. **Pricing forms**: Pricing forms (Exhibit E) have been created to facilitate the bidding of the base scope of work as well as the 2 additive alternates as described above. Bid prices must be presented on the appropriate form and in the format provided by each of the Pricing Forms. Additionally, Bidders shall include a schedule of unit prices that may be used as the basis of determining the cost of scope deletions or additions.

7. **Executive Schedule Requirements**: Bidders are required to submit an executive summary schedule along with their bid which presents the following:

   7.1. Notice-to-Proceed (NTP)

   7.2. Submittals as required by Exhibit F, Schedule Requirements.

   7.3. Design activities.

   7.4. Overall sequence and duration of the construction for the base scope of work subdivided into the anticipated required major phases for each area of work and the schedule relationship of each of the additive alternates.

   7.5. Contractor is to allow time for commissioning services and acceptance testing as required by Other Transaction Agreement (OTA) HSTS04-13-H-CT1141, Exhibit C-2.

   7.6. Time allotted for the TSA to remove the existing EDS machines and install the new EDS machines.

   7.7. Total duration of the project.

   7.8. Final Completion.

   Project detailed scheduling requirements are presented in Exhibit F, Schedule Requirements.

8. **Executive Work Plan:** Bidders are required to submit an executive work plan (2 pages maximum) indicating the project organization, staffing, resources, subcontracting and means and methods of delivering the project. Contractor shall also comply with project detailed work pan requirements are presented in Exhibit H, Work Plan.

9. **Executive Quality Assurance/Quality Control Plan:** Bidders are required to submit an executive quality assurance/quality control plan (2 pages maximum) addressing their proposed activities to ensure quality in all aspects of the project, including but not limited to, design, procurement and construction. Project detailed quality assurance/quality control plan requirements are presented in Exhibit G, Quality Control Plan Requirements.

10. **Executive Safety Plan:** Bidders are required to submit an executive safety plan (2 pages maximum) addressing their approach to ensure that the project will be designed and constructed safely. Project detailed safety plan requirements are presented in Exhibit D, Construction Safety and Health Plan.

11. **No Offer by City; Firm Offer by Bidder:** This procurement does not constitute an offer by City to enter into a Services Agreement and cannot be accepted by any Bidder to form a Services Agreement. This procurement is only an invitation for offers from pre-qualified Bidders and no offer shall bind City. A Bidder's offer is a firm offer and may not be withdrawn except under the rules specified in City's Code of Ordinances and other applicable law.

12. **Bid Deadline:** To be considered Responsive and Responsible, a Bidder must complete and submit all required Bid submittals in strict accordance with the instructions contained in this ITB or on the individual form. Accordingly, responses to this ITB must be received by City's Department of Procurement, 55 Trinity Avenue, S.W., City Hall South, Suite 1900, Atlanta, Georgia 30303-0307, on **Wednesday, September 23, 2015**, no later than **2:00 p.m.** EST (as verified by the Bureau of National Standards) each Bidder must submit one (1) Original, marked "Original", and five (5) copies of its bid in appropriately sized **three-ring binders**. The following submittals are required to be included in each bid:

    12.1. Form 1: Illegal Immigration Reform and Enforcement Act: This ITB is subject to the Illegal Immigration Reform and Enforcement Act ("**Act**"). Pursuant to Act, the Bidder must provide with its bid proof of its registration with and continuing and future participation in the E-Verify Program established by the United States Department of Homeland Security. A completed Affidavit, set forth in **Part 1; Form 1**; Illegal Immigration Reform and Enforcement Act Forms, must be submitted at the time of submission. Under state law, the City cannot consider any bid which does not include completed forms. It is not the intent of this notice to provide detailed information or legal advice concerning the Act. All Bidders intending to do business with the City are responsible for independently apprising themselves of and complying with the requirements of the Act and assessing its effect on City procurements and their participation in those procurements. For additional information on the E-Verify program or to enroll in the program, go to: https://e-verify.uscis.gov/enroll.

    12.2. Form 2:Contractor Disclosure Form;

    12.3. Form 3: Proponent Financial Disclosure (N/A for this Bid);

    12.4. Form 4A: Certificate of Insurance;

12.5. Form 4B: Certificate of Bonding Ability;

12.6. Form 5: Acknowledgement of Addenda

12.7. Form 6: Bidder Contact Directory;

12.8. Form 7: Reference List (N/A for this Bid):

12.9. Form 8: Bid Bond;

12.10. Form 9: Essential Subcontractor Qualification Statement; and

12.11. Form 10: AIP Grant Forms.

12.12. The following form from Exhibit "E", Pricing Forms:

12.12.1. Form E-1. Design/Builder's Cost Proposal;

12.13. The following forms from Part 2 of this ITB:

12.13.1. Appendix A; DBE Forms (attached to Services Agreement; Part 2 of ITB).

13. **Pre-Bid Conference:** It is strongly recommended that each pre-qualified Bidder attend the Pre-Bid Conference which is scheduled for **Tuesday, August 18, 2015** at **10:00 A.M.**, at the H-JDP Technical Support Campus, 1255 South Loop Road, College Park, Georgia. Each Bidder is responsible to be fully informed regarding all existing and expected conditions and matters which might affect the cost or the performance of the Services. Any failure to fully investigate the requirements of this ITB shall not relieve any Bidder from the responsibility for understanding and properly estimating the difficulty and cost of successfully performing the Services being sought under this ITB. An optional site tour is scheduled for **Tuesday, August 18, 2015, immediately following Pre-bid Conference,** departing from the Tech Campus, 1255 South Loop Road, College Park, Georgia 30337. Bidders attending the site tour for this solicitation must submit their company name, attendee(s) name and phone number to the Department of Procurement no later than close of business on **Monday, August 10, 2015 at 5:00 P.M.** Those attendees that have current airport badge must submit their information as well. Please submit this information to Mr. Leslie Page, Contracting Officer via e-mail at **lpage@Atlantaga.gov**. All names will be submitted to Aviation Security for screening prior to the Site Tour.

14. **Bid Guarantee:**

14.1. Each Bidder must furnish a Bid Guarantee in the amount of five percent (5%) of its Bid amount. At the option of the Bidder, the Bid Guaranty may also be a certified check payable to the City of Atlanta or a Bid Bond attached to this ITB as **Form 8**. A

surety executing a Bid Bond must meet the requirements set forth in Exhibit D; Insurance and Bonding Requirements and Exhibit A, General Conditions, GC-12 Performance and Payment Bonds attached to the Services Agreement included at Part 2 of this ITB.

14.2. Each Bidder agrees that, if it is awarded a Services Agreement, it will, in addition to the executed Services Agreement, be required to submit additional documentation (e.g. insurance/bonds, etc.) after such award pursuant to notice provided by City. If, within ten (10) days of receiving such notice, the successful Bidder fails to comply with that notice and submit additional requested documentation, City may retain the Bid Guarantee as liquidated damages and not as a penalty.

15. **Procurement Questions; Prohibited Contacts:** Any questions regarding this ITB should be submitted in writing to City's contact person **Mr. Leslie Page**, Contracting Officer, Department of Procurement, 55 Trinity Avenue, SW, Suite 1900, Atlanta, Georgia 30303-0307, by fax (404) 658-7705 or e-mail **lpage@Atlantaga.gov,** on or before **Friday August 21, 2015.** Questions received after the designated period will not be considered. Any response made by City will be provided in writing to all Bidders by addendum. **All questions and clarifications must be resolved through this channel as Bids shall not include any qualifications or clarifications.** It is the responsibility of each Bidder to obtain a copy of any Addendum issued for this procurement by monitoring the City' website at www.atlantaga.gov and its Department of Procurement's Plan Room which is open during posted business hours, Suite 1900, 55 Trinity Avenue, S.W., City Hall South, Atlanta, Georgia 30303. No Bidder may rely on any verbal response to any question submitted concerning this ITB. All Bidders and representatives of any Bidder are strictly prohibited from contacting any other City employees or any third-party representatives of City on any matter having to do with this ITB. All communications by any Bidder concerning this ITB must be made to the City's contact person, or any other City representatives designated by the Chief Procurement Officer in writing.

16. **Ownership of Bids:** Each Bid submitted to City will become the property of City, without compensation to a Bidder, for City's use, in its discretion.

17. **Insurance and/or Bonding Requirements:** The Insurance and/or bonding requirements for any Services Agreement that may be awarded pursuant to this ITB are set forth in Exhibit "D"; Insurance and Bonding Requirements and Exhibit A, General Conditions, GC-12 Performance and Payment Bonds attached to the Services Agreement included at Part 2 of this ITB.

18. **Applicable City OCC Programs:** City's OCC Programs applicable to this procurement are set forth in Appendix "A"; Office of Contract Compliance Submittals, attached to the Services Agreement included at Part 2 of this ITB. This is a federally funded project and, as such, must comply with all DBE and Davis-Bacon Act requirements.

19. **Evaluation of Financial Information:** This ITB requires the provision of a Payment Bond and/or Performance Bond if a Services Agreement is awarded, attached as **Exhibit J, Performance Bond** and **Exhibit K, Payment Bond**. In connection with that requirement, City will review the information included in Form 4A; Certification of Insurance and Form 4B; Certificate of Bonding Ability. A Bidder must include with that form (a) notarized letter(s) from its proposed insurer(s) and surety(ies) indicating that the financial capacity of the Bidder is such that the insurer(s)/surety(ies) is/are willing to issue insurance and Payment and Performance Bonds for the Bidder if a Services Agreement is awarded to it.

20. **Special Rules Applicable to Evaluation of Bids:**

    20.1. All extensions of the unit prices shown and the subsequent addition of extended amounts included in a Bid may be verified by City. In the event of a discrepancy between the unit price bid and the extension, the unit price will be deemed intended by the Bidder and the extension shall be adjusted. In the event of a discrepancy between the sum of the extended amounts and the Bid total, the sum of the extended amounts shall govern.

    20.2. A Bidder shall be required to submit, in writing, the addresses of any proposed subcontractors or equipment manufacturers listed on the Bid, and to submit other material information relative to proposed subcontractors or equipment manufacturers. City reserves the right to disapprove any proposed subcontractors or equipment manufacturers who's technical or financial ability or resources or whose experience is deemed inadequate.

    20.3. City reserves the right to reject any Bid in which the prices appear to be unbalanced. Where only a single responsible and responsive Bid is received, City may, in its sole discretion, elect to conduct a price or cost analysis of the Bid. Such Bidder shall cooperate with City and provide any supplemental information that may be required. The determination whether to enter into a Services Agreement with such sole Bidder is entirely within City's discretion and not dependent upon the performance of a price or cost analysis.

    20.4. Each Bidder's Bid must affirmatively state within it that the prices contained in it, as well as its total Bid amount(s), are valid for a period of one hundred and eighty (180) days from the date of the Bid deadline.

21. **Examination of Bid Documents:**

    21.1. Each Bidder is responsible for examining with appropriate care this ITB and associated Bid Documents and all Addenda, and for informing itself with respect to all conditions which might in any way affect the cost or the performance of any Services. Failure to do so will be at the sole risk of the Bidder, who is deemed to have included all costs for performance of the Services in its Bid.

21.2. Each Bidder shall promptly notify City in writing should it find discrepancies, errors, ambiguities or omissions in the ITB and associated Bid Documents, or should their intent or meaning appear unclear or ambiguous, or should any other question arise relative to the ITB and associated Bid Documents.

21.3. City may, by addendum, modify any provision or part of this ITB or associated Bid Documents at any time prior to the Bid due date and time. The Bidder may not rely on oral clarifications/representations/instructions to the ITB or associated Bid Documents unless they are confirmed in writing by City in an issued addendum.

21.4. Each Bidder must confirm addenda have been received and acknowledge receipt by executing **Form 5**; Acknowledgment of Addenda attached to this ITB.

22. **Cancellation of Solicitation:** This solicitation may be cancelled in accordance to the City of Atlanta Code of Ordinances.

23. **Escrow Bid Documents:**

23.1. Within ten (10) calendar days after the CITY issues its Notice of Intent to Award a Contract, the winning Bidder shall submit one true copy of all documents used in preparation of its Bid (including subcontractors' documents, if applicable) to the CITY to be held in the CITY's secured vault located within the Department of Procurement ("escrow") for the duration of the Contract. This collection of documents shall be referred to as the "Escrow Bid Documents."

23.2. If a Bid is based on subcontracting any part of the Work, the winning Bidder shall also submit Escrow Bid Documents for each subcontractor whose total subcontract price exceeds five percent (5%) or Five Hundred Thousand ($500,000) Dollars, whichever is less, of the total Contract price proposed by the winning Bidder. Such documents must be filed in the same manner and at the same time as the winning Bidder's Escrow Bid Documents.

23.3. The winning Bidder may submit Escrow Bid Documents in its usual cost-estimating format **provided they are clear and well organized**. The requirement to submit Escrow Bid Documents is not intended to cause the Bidder extra work during the preparation of its Bid. The Escrow Bid Documents shall be presented in English.

23.4. An Escrow Bid Documents Certificate ("Certificate") must accompany the Escrow Bid Documents at the time they are placed in escrow. The Certificate must be signed by an individual authorized by the Bidder to execute the bid proposal who must represent and warrant (1) that the material in the Escrow Bid Documents constitutes all the documents used in preparation of the Bid, (2) that he or she has personally examined the contents of the Escrow Bid Documents container, (3) that the

documents in the container are accurate and complete, and (4) that no other Bid preparation information shall be considered in resolving disputes.

23.5. The CITY acknowledges that the Escrow Bid Documents may contain information that the winning Bidder, or its subcontractor(s), considers "trade secret," as that term is defined in O.C.G.A. § 10-1-761. Information provided to the City is subject to disclosure under the Georgia Open Records Act. Pursuant to O.C.G.A. § 50-18-72(a)(34), "[a]n entity submitting records containing trade secrets that wishes to keep such records confidential under this paragraph shall submit and attach to the records an affidavit affirmatively declaring that specific information in the records constitute trade secrets pursuant to Article 27 of Chapter 1 of Title 10 [O.C.G.A. § 10-1-760 et seq.]."

23.6. Additional information regarding the Escrow Bid Documents (e.g. use, examination, ownership) may be found in the Agreement, Article 18.

24. **General Requirements for Airport Improvement Program for Requests for Bids:**

24.1. The following provisions from Exhibit C-4, Required Contract Provisions for Airport Improvement Program are hereby incorporated by reference:

24.1.1. Buy American Preference

24.1.2. Foreign Trade Restriction

24.1.3. Davis Bacon

24.1.4. Affirmative Action

24.1.5. Governmentwide Debarment and Suspension

24.1.6. Governmentwide Requirements for Drug-free Workplace

24.2. Title VI Solicitation Notice: The **(Name of Sponsor)**, in accordance with the provisions of Title VI of the Civil Rights Act of 1964 (78 Stat. 252, 42 U.S.C. §§ 2000d to 2000d-4) and the Regulations, hereby notifies all bidders that it will affirmatively ensure that any contract entered into pursuant to this advertisement, disadvantaged business enterprises will be afforded full and fair opportunity to submit bids in response to this invitation and will not be discriminated against on the grounds of race, color, or national origin in consideration for an award.

24.3. Notice of Nonsegregated Facilities Requirement

24.3.1. Notice to Prospective Federally Assisted Construction Contractors

24.3.1.1. A Certification of Non-segregated Facilities shall be submitted prior to the award of a federally-assisted construction contract exceeding $10,000 which is not exempt from the provisions of the Equal Opportunity Clause.

24.3.1.2. Contractors receiving federally-assisted construction contract awards exceeding $10,000 which are not exempt from the provisions of the Equal Opportunity Clause will be required to provide for the forwarding of the following notice to prospective subcontractors for supplies and construction contracts where the subcontracts exceed $10,000 and are not exempt from the provisions of the Equal Opportunity Clause.

24.3.1.3. The penalty for making false statements in offers is prescribed in 18 U.S.C. § 1001.

24.3.2. Notice to Prospective Subcontractors of Requirements for Certification of Non-Segregated Facilities

24.3.2.1. A Certification of Non-segregated Facilities shall be submitted prior to the award of a subcontract exceeding $10,000, which is not exempt from the provisions of the Equal Opportunity Clause.

24.3.2.2. Contractors receiving subcontract awards exceeding $10,000 which are not exempt from the provisions of the Equal Opportunity Clause will be required to provide for the forwarding of this notice to prospective subcontractors for supplies and construction contracts where the subcontracts exceed $10,000 and are not exempt from the provisions of the Equal Opportunity Clause.

24.3.2.3. The penalty for making false statements in offers is prescribed in 18 U.S.C. § 1001.

25. **Submission of Bids:**

25.1. Bids must be submitted strictly in accordance with the requirements of this ITB. All blank spaces must be filled in and must be typed or hand written in black ink. All dollar amounts must be BOTH in writing and figures. Prices presented in written form prevail over prices presented in numerical form in the event of a discrepancy. All corrections to any entry must be lined out and initialed by the Bidder. Do not use correction tapes or fluids.

25.2. Bids shall be signed by hand by a principal of the Bidder who has the authority to enter into a Contract with the City. Joint Ventures or partnerships must designate one

joint venture/partner to represent the joint venture/partnership in submitting and executing a Bid. Each Bidder is responsible for the preparation of its Bid and for the costs of preparing and submitting them.

25.3. Bids will be opened on **Wednesday, September 23, 2015** at **2:00 P.M.** in the Department of Procurement's Bid Conference Room, Suite 1900, 55 Trinity Avenue, S. W., City Hall South, Atlanta, Georgia.

25.4. Bids must be sealed and clearly marked identifying the following information on the front of the package:

25.4.1. Bidder's Name/Company Name and Address.

25.4.2. Bidder's Georgia Contractor's License Number

25.4.3. Bidder's Federal Work Authorization User Identification Number

25.4.4. Addressed to:

Adam L. Smith, Esq., CPPO, CPPB, CPPM, CPP
Chief Procurement Officer
Department of Procurement
City of Atlanta
55 Trinity Avenue, Suite 1900
City Hall South
Atlanta, Georgia 30303
RE: **PROJECT NUMBER FC-8071**

The following submittals must be completed and submitted on **Wednesday, September 23, 2015:**[1]

Item #	Required Bid Submittal Check Sheet	Check (√)
1.	**Form 1; Illegal Immigration Reform and Enforcement Act Forms**	
2.	**Form 2; Contractor Disclosure Form**	
3.	**Form 3; Proponent Financial Disclosure (NOT APPLICABLE FOR THIS ITB)**	
4.	**Form 4A; Certification of Insurance**	
5.	**Form 4B; Certification of Bonding Ability**	
6.	**Form 5; Acknowledgement of Addenda**	
7.	**Form 6; Respondent/Bidder Contact Directory**	
8.	**Form 8; Bid Bond**	
9.	**Form 9; Essential Subcontractor Qualification Statement**	
10.	**Form 10; AIP Grant Forms**	
	Major Shareholders Disclosure Affidavit	
	Bidder's Statement on Previous Contracts Subject to EEO Clause	
	Certification of Non-segregated facilities (Contractors / Subcontractors)	
	Certificate Regarding Debarment and Suspension (Bidder or Offeror)	
	Certificate Regarding Debarment and Suspension (Successful Bidder Regarding Lower Tier Participants)	
	Certification for Contracts, Grants, Loans, and Cooperative Agreements	
	Certificate Concerning Foreign Interest	
	Certificate of Buy American Compliance for Total Facility (Buildings Such as Terminal, SRE, ARFF, ETC.)	
11.	**Documentation evidencing Proponent's authority to**	

[1] This table is included for Bidder's convenience and may be used to track the preparation and submittal of certain required information with its Bid.

Item #	Required Bid Submittal Check Sheet	Check (√)
	transact business in the State of Georgia (Certificate of Existence)	
12.	Georgia General Contractor's License Per Minimum Qualification 3.2	
13.	Conveyor System Subcontractor Resumes of Key Staff and Experience per Minimum Qualification 3.4	
14.	Georgia Electrical Subcontractor's Resumes of Key Staff and License per Minimum Qualification 3.5	
15.	Designer of Record Georgia Architect or Engineer Licenses, Resumes of Key Staff, and Requirements per Minimum Qualification 3.6	
16.	Executive Schedule	
17.	Executive Work Plan	
18.	Executive Safety Plan	
19.	Executive Quality Assurance/Quality Control Plan	
20.	Exhibit "E", Form E-1: Pricing Forms	
21.	Exhibit "D", Non-OCIP Insurance Information	
22.	Appendix "A": DBE Forms 1-4	

PART 4: REQUIRED SUBMITTAL FORMS

All Respondents, including, but not limited to, corporate entities, limited liability companies, joint ventures, or partnerships, that submit a Proposal or Bid in response to this solicitation must fill out all forms in their entirety, and all forms must be signed, notarized or sealed with the corporate seal (if applicable), as required per each form's instructions.

If Respondent intends to be named as a Prime Contractor(s) with the City, then Respondent must fill out all the forms listed in this solicitation document; otherwise, Respondent may be deemed non-responsive.

FORM 1; ILLEGAL IMMIGRATION REFORM AND COMPLIANCE ACT

FORM 1

Illegal Immigration Reform and Enforcement Act Forms

INSTRUCTIONS TO PROPONENTS:

All Bidders must comply with the Illegal Immigration Reform and Enforcement Act, O.G.G.A § 13-10-90, et seq. (IIREA). IIREA was formerly known as the Georgia Security and Immigration Compliance Act or GSICA. Bidders must familiarize themselves with IIREA and are solely responsible for ensuring compliance. Bidders must not rely on these instructions for that purpose. They are offered only as a convenience to assist Proponents in complying with the requirements of the City's procurement process and the terms of this RFP.

1. The attached Contractor Affidavit must be filled out COMPLETELY and submitted with the bid prior to bid due date.

2. The Contractor Affidavit must contain an active Federal Work Authorization Program (E-Verify) User ID Number and Date of Registration.

3. Where the business structure of a Bidder is such that Bidder is required to obtain an Employer Identification Number (EIN) from the Internal Revenue Service, Bidder must complete the Contractor Affidavit on behalf of, and provide a Federal Work Authorization User ID Number issued to, the Bidder itself. Where the business structure of a Bidder does not require it to obtain an EIN, each entity comprising Bidder must submit a separate Contractor Affidavit.

   Example 1, ABC, Inc. and XYZ, Inc. form and submit a Bid as AirportFood, LLC. AirportFood, LLC must enroll in the E-verify program and submit a single Contractor Affidavit in the name of AirportFood, LLC which includes the Federal Work Authorization User ID Number issued to AirportFood, LLC.

   Example 2, ABC, Inc. and XYZ, Inc. execute a joint venture agreement and submit a Bid under the name AirportFood, JV. If, based on the nature of the JV agreement, Airport Food, JV is not required to obtain an Employer Identification Number from the IRS. The Bid submitted by AirportFood, JV must include both a Contractor Affidavit for ABC, Inc. and a Contractor Affidavit for XYZ, Inc.

4. All Contractor Affidavits must be executed by an authorized representative of the entity named in the Affidavit.

5. All Contractor Affidavits must be duly notarized.

6. All Contractor Affidavits must be submitted attached to the front outside cover of ITB.

Contractor Affidavit under O.C.G.A. § 13-10-91(b)(1)

By executing this affidavit, the undersigned contractor verifies its compliance with O.C.G.A. § 13-10-91, stating affirmatively that the individual, firm or corporation which is engaged in the physical performance of services on behalf of the City of Atlanta has registered with, is authorized to use and uses the federal work authorization program commonly known as E-Verify, or any subsequent replacement program, in accordance with the applicable provisions and deadlines established in O.C.G.A. § 13-10-91. Furthermore, the undersigned contractor will continue to use the federal work authorization program throughout the contract period and the undersigned contractor will contract for physical performance of services in satisfaction of such contract only with subcontractors who present an affidavit to the contractor with the information required by O.C.G.A. § 13-10-91(b). Contractor hereby attests that its federal work authorization user identification number and date of authorization are as follows:

_____ _____

Federal Work Authorization User Identification Number Date of Authorization

Name of Contractor: _____

Name of Project: _____

Name of Public Employer: City of Atlanta

I hereby declare under penalty of perjury that the forgoing is true and correct.

Executed on _____, ____, 20__ in _____ (city), _____ (state)

_____

Signature of Authorized Officer or Agent

_____

Printed name and Title of Authorized Officer or Agent

SUBSCRIBED AND SWORN BEFORE
ME ON THIS THE ___, DAY OF _____, 201_____

_____

NOTARY PUBLIC
My Commission Expires: _____

Subcontractor Affidavit under O.C.G.A. § 13-10-91(b)(3)

By executing this affidavit, the undersigned subcontractor verifies its compliance with O.C.G.A. § 13-10-91, stating affirmatively that the individual, firm or corporation which is engaged in the physical performance of services under a contract with (_____ (name of contractor)) on behalf of the City of Atlanta has registered with, is authorized to use and uses the federal work authorization program commonly known as E-Verify, or any subsequent replacement program, in accordance with the applicable provisions and deadlines established in O.C.G.A. § 13-10-91. Furthermore, the undersigned subcontractor will continue to use the federal work authorization program throughout the contract period and the undersigned subcontractor will contract for the physical performance of services in satisfaction of such contract only with sub-subcontractors who present an affidavit to the subcontractor with the information required by O.C.G.A. § 13-10-91(b). Additionally, the undersigned subcontractor will forward notice of the receipt of an affidavit from a sub-subcontractor to the contractor within five business days of receipt. If the undersigned subcontractor receives notice of receipt of an affidavit from any sub-subcontractor that has contracted with a sub-subcontractor to forward, within five business days of receipt, a copy of such notice to the contractor. Subcontractor hereby attests that its federal work authorization user identification number and date of authorization are as follows:

_____ _____

Federal Work Authorization User Identification Number Date of Authorization

Name of Subcontractor: _____

Name of Project: _____

Name of Public Employer: City of Atlanta

I hereby declare under penalty of perjury that the forgoing is true and correct.

Executed on _____, ____, 20__ in _____ (city), _____ (state)

_____

Signature of Authorized Officer or Agent

_____

Printed name and Title of Authorized Officer or Agent

SUBSCRIBED AND SWORN BEFORE
ME ON THIS THE ___, DAY OF _____, 201_____

_____

NOTARY PUBLIC
My Commission Expires: _____

Sub-subcontractor Affidavit under O.C.G.A. § 13-10-91(b)(4)

By executing this affidavit, the undersigned sub-subcontractor verifies its compliance with O.C.G.A. §13-10-91, stating affirmatively that the individual, firm or corporation which is engaged in the physical performance of services under a contract for (_____ (name of subcontractor or sub-subcontractor with whom such sub-subcontractor has privity of contract)) and (_____ (name of contractor)) on behalf of the City of Atlanta has registered with, is authorized to use and uses the federal work authorization program commonly known as E-Verify, or any subsequent replacement program, in accordance with the applicable provisions and deadlines established in O.C.G.A.§13-10-91. Furthermore, the undersigned sub-subcontractor will continue to use the federal work authorization program throughout the contract period and the undersigned sub-subcontractor will contract for the physical performance of services in satisfaction of such contract only with sub-subcontractors who present an affidavit to the sub-subcontractor with the information required by O.C.G.A. §13-10-91(b). The undersigned sub-subcontractor shall submit, at the time of such contract, this affidavit to (_____ (name of subcontractor or sub-subcontractor with whom such sub-subcontractor has privity of contract)). Additionally, the undersigned sub-subcontractor will forward notice of the receipt of any affidavit from a sub-subcontractor to (_____ (name of subcontractor or sub-subcontractor with whom such sub-subcontractor has privity of contract)). Sub-subcontractor hereby attests that its federal work authorization user identification number and date of authorization are as follows:

_____ _____

Federal Work Authorization User Identification Number Date of Authorization

Name of Contractor: _____

Name of Project: _____

Name of Public Employer: City of Atlanta

I hereby declare under penalty of perjury that the forgoing is true and correct.

Executed on _____, ____, 20__ in _____ (city), _____ (state)

_____

Signature of Authorized Officer or Agent

_____

Printed name and Title of Authorized Officer or Agent

SUBSCRIBED AND SWORN BEFORE
ME ON THIS THE ___, DAY OF _____, 201_____

_____

NOTARY PUBLIC

FORM 2; CONTRACTOR DISCLOSURE FORM

FORM 2
Contractor Disclosure Form

DEFINITIONS FOR THE PURPOSES OF THIS DISCLOSURE

"Affiliate"	Any legal entity that, directly or indirectly through one of more intermediate legal entities, controls, is controlled by or is under common control with the Respondent or a member of Respondent.
"Contractor"	Any person or entity having a contract with the city.
"Control"	The controlling entity: (i) possesses, directly or indirectly, the power to direct or cause the direction of the management and policies of the controlled entity, whether through the ownership of voting securities or by contract or otherwise; or (ii) has direct or indirect ownership in the aggregate of fifty one (51%) or more of any class of voting or equity interests in the controlled entity.
"Respondent"	Any individual or entity that submits a response to a solicitation. If the Respondent is an individual, then that individual must complete and sign this Contractor Disclosure Form where indicated. If the Respondent is an entity, then an authorized representative of that entity must complete and sign this Contractor Disclosure where indicated. **If the Respondent is a newly formed entity (formed within the last three years), then an authorized representative of that entity must complete and sign this Contractor Disclosure Form where indicated, and each of the members or owners of the entity must also complete and sign separate Contractor Disclosure Form where indicated.**

Instructions: Provide the following information for the entity or individual completing this Statement (the "Individual/Entity").

A. Basic Information:

1. Name of Individual/Entity responding to this solicitation:
2. Name of the authorized representative for the responding Entity:

B. Individual/Entity Information:

1. Principal Office Address:
2. Telephone and Facsimile Numbers:
3. E-Mail Address:
4. Name and title of Contact Person for the Individual/Entity:
5. Is the individual/Entity authorized to transact business in the state of Georgia?

☐ Yes **(Attach Certificate of Authority to transact business in Georgia from Georgia Secretary of State.)**
☐ No

C. Questionnaire

If you answer "YES" to any of the questions below, please indicate the name(s) of the person(s), the nature, and the status and/or outcome of the information, indictment, conviction, termination, claim or litigation, the name of the court and the file or reference number of the case, as applicable. Any such information should be provided on a separate page, attached to this form and submitted with your Proposal.

1. Please describe the general development of the Respondent's business during the past ten (10) years, or such shorter period of time that the Respondent has been in business.

	YES	NO
2. Are there any lawsuits, administrative actions or litigation to which Respondent is currently a party or has been a party (either as a plaintiff or defendant) during the past ten (10) years based upon fraud, theft, breach of contract, misrepresentation, safety, wrongful death or other similar conduct?	☐	☐
3. If "yes" to question number 2, were any of the parties to the suit a bonding company, insurance company, an owner, or otherwise? If so, attach a sheet listing all parties and indicate the type of company involved.	☐	☐
4. Has the Respondent been charged with a criminal offense within the last ten (10) years?	☐	☐
5. Has the Respondent received any citations or notices of violation from any government agency in connection with any of Respondent's work during the past ten (10) years (including OSHA violations)? Describe any citation or notices of violation which Respondent received.	☐	☐

6. Please state whether any of the following events have occurred in the last ten (10) years with respect to the Respondent. If any answer is yes, explain fully the circumstances surrounding the subject matter of the affirmative answer:

	YES	NO
(a) Whether Respondent, or Affiliate currently or previously associated with Respondent, has ever filed a petition in bankruptcy, taken any actions with respect to insolvency, reorganization, receivership, moratorium or assignment for the benefit of creditors, or otherwise sought relief from creditors?	☐	☐

(b) Whether Respondent was subject of any order, judgment or decree not subsequently reversed, suspended or vacated by any court permanently enjoining Respondent from engaging in any type of business practice? **YES** ☐ **NO** ☐

(c) Whether Respondent was the subject of any civil or criminal proceeding in which there was a final adjudication adverse to Respondent which directly arose from activities conducted by Respondent. **YES** ☐ **NO** ☐

7. Has any employee, agent or representative of Respondent who is or will be directly involved in the project, in the last ten (10) years:

(a) directly or indirectly, had a business relationship with the City? **YES** ☐ **NO** ☐

(b) directly or indirectly, received revenues from the City? **YES** ☐ **NO** ☐

(c) directly or indirectly, received revenues from conducting business on City property or pursuant to any contract with the City? **YES** ☐ **NO** ☐

8. Whether any employee, agent, or representative of Respondent who is or will be directly involved in the project has or had within the last ten (10) years a direct or indirect business relationship with any elected or appointed City official or with any City employee? **YES** ☐ **NO** ☐

9. Whether Respondent has provided employment or compensation to any third party intermediary, agent, or lobbyist to directly or indirectly communicate with any City official or employee, or municipal official or employee in connection with any transaction or investment involving your firm and the City? **YES** ☐ **NO** ☐

10. Whether Respondent, or any agent, officer, director, or employee of your organization has solicited or made a contribution to any City official or member, or to the political party or political action committee within the previous five (5) years? **YES** ☐ **NO** ☐

11. Has the Respondent or any agent, officer, director, or employee been terminated, suspended, or debarred (for cause or otherwise) from any work being performed for the City or any other Federal, State or Local Government? **YES** ☐ **NO** ☐

12. Has the Respondent, member of Respondent's team or officer of any of them (with respect to any matter involving the business practice or activities of his or her employer been notified within the five (5) years preceding the date of this offer that any of them are the target of a criminal investigation, grand jury **YES** ☐ **NO** ☐

investigation, or civil enforcement proceeding?

13. Please identify any Personal or Financial Relationships that may give rise to a conflict of interest as defined below *[Please be advised that you may be ineligible for award of contract if you have a personal or financial relationship that constitutes a conflict of interest that cannot be avoided]*:

(a) Personal relationships: executives, board members and partners in firms submitting offers must disclose familial relationships with employees, officers and elected officials of the City of Atlanta. Familial relationships shall include spouse, domestic partner registered under section 94-133, mother, father, sister, brother, and natural or adopted children of an official or employee.

YES ☐ **NO** ☐

(b) Financial relationships: Respondent must disclose any interest held with a City employee or official or family members of a City employee or official, which may yield, directly or indirectly, a monetary or other material benefit to the Respondent or the Respondent's family members. Please describe:

YES ☐ **NO** ☐

_____

_____

_____

D. REPRESENTATIONS

Anti-Lobbying Provision. All respondents, including agents, employees, representatives, lobbyists, attorneys and proposed partner(s), subcontractor(s) or joint venturer(s), will refrain, under penalty of the respondent's disqualification, from direct or indirect contact for the purpose of influencing the selection or creating bias in the selection process with any person who may play a part in the selection process.

Certification of Independent Price Determination/Non-Collusion. Collusion and other anticompetitive practices among offerors are prohibited by city, state and federal laws. All Respondents shall identify a person having authority to sign for the Respondent who shall certify, in writing, as follows:

> "I certify that this bid proposal is made without prior understanding, agreement, or connection with any corporation, firm, or person submitting a bid or offer for the same supplies, labor, services, construction, materials or equipment to be furnished or professional or consultant services, and is in all respects fair and without collusion or fraud. I understand collusive bidding is a violation of city, state and federal law and can result in fines, prison sentences, and civil damages awards. By signing this document, I agree to abide by all conditions of this solicitation and offer and certify that I am authorized to sign for this Respondent/Offeror."

Certify Satisfaction of all Underlying Obligations. (If Applicable) If a Contract is awarded through this solicitation, then such Contractor should know that before final payment is made to a Contractor by the City, the Contractor shall certify to the City in writing, in a form satisfactory to the City, that all subcontractors, materialmen suppliers and similar firms or persons involved in the City contract have been paid in full at the time of final payment to the Contractor by the City or will be paid in full utilizing the monies constituting final payment to the Contractor.

Confidentiality. Details of the proposals will not be discussed with other respondents during the selection process. Respondent should be aware, however, that all proposals and information submitted therein may become subject to public inspection following award of the contract. Each respondent should consider this possibility and, where trade secrets or other proprietary information may be involved, may choose to provide in lieu of such proprietary information, an explanation as to why such information is not provided in its proposal. However, the respondent may be required to submit such required information before further consideration.

Equal Employment Opportunity (EEO) Provision. All bidders or offerors will be required to comply with sections 2-1200 and 2-1414 of the City of Atlanta Code of Ordinances, as follows: During the performance of the agreement, the Contractor agrees as follows:

a. The Contractor shall not discriminate against any employee, or applicant for employment, because of race, color, creed, religion, sex, domestic relationship status, parental status, familial status, sexual orientation, national origin, gender identity, age, disability, or political affiliation. As used here, the words "shall not discriminate" shall mean and include without limitation the following:

   Recruited, whether by advertising or other means; compensated, whether in the form of rates of pay, or other forms of compensation; selected for training, including apprenticeship; promoted; upgraded; demoted; downgraded; transferred; laid off; and terminated.

   The Contractor agrees to and shall post in conspicuous places, available to employees and applicants for employment, notices to be provided by the contracting officers setting forth the provisions of the EEO clause.

b. The Contractor shall, in all solicitations or advertisements for employees, placed by or on behalf of the Contractor, state that all qualified applicants will receive consideration for employment without regard to race, color, creed, religion, sex, domestic relationship status, parental status, familial status, sexual orientation, national origin, gender identity, age, disability, or political affiliation.

c. The Contractor shall send to each labor union or representative of workers with which the Contractor may have a collective bargaining agreement or other contract or understanding a notice advising the labor union or workers' representative of the

Contractor's commitments under the equal employment opportunity program of the City of Atlanta and under the Code of Ordinances and shall post copies of the notice in conspicuous places available to employees and applicants for employment. The Contractor shall register all workers in the skilled trades who are below the journeyman level with the U.S. Bureau of Apprenticeship and Training.

d. The Contractor shall furnish all information and reports required by the contract compliance officer pursuant to the Code of Ordinances, and shall permit access to the books, records, and accounts of the Contractor during normal business hours by the contract compliance officer for the purpose of investigation so as to ascertain compliance with the program.

e. The Contractor shall take such action with respect to any subcontractor as the city may direct as a means of enforcing the provisions of paragraphs (a) through (h) herein, including penalties and sanctions for noncompliance; provided, however, that in the event the Contractor becomes involved in or is threatened with litigation as a result of such direction by the city, the city will enter into such litigation as is necessary to protect the interest of the city and to effectuate the equal employment opportunity program of the city; and, in the case of contracts receiving federal assistance, the Contractor or the city may request the United States to enter into such litigation to protect the interests of the United States.

f. The Contractor and its subcontractors, if any, shall file compliance reports at reasonable times and intervals with the city in the form and to the extent prescribed by the contract compliance officer. Compliance reports filed at such times directed shall contain information as to employment practices, policies, programs and statistics of the Contractor and its subcontractors.

g. The Contractor shall include the provisions of paragraphs (a) through (h) of this equal employment opportunity clause in every subcontract or purchase order so that such provisions will be binding upon each subcontractor or vendor.

h. A finding, as hereinafter provided, that a refusal by the Contractor or subcontractor to comply with any portion of this program, as herein provided and described, may subject the offending party to any or all of the following penalties:

(1) Withholding from the Contractor in violation all future payments under the involved contract until it is determined that the Contractor or subcontractor is in compliance with the provisions of the contract;
(2) Refusal of all future bids for any contract with the City of Atlanta or any of its departments or divisions until such time as the Contractor or subcontractor demonstrates that there has been established and there shall be carried out all of the provisions of the program as provided in the Code of Ordinances;

(3) Cancellation of the public contract;
(4) In a case in which there is substantial or material violation of the compliance procedure herein set forth or as may be provided for by the contract, appropriate proceedings may be brought to enforce those provisions, including the enjoining, within applicable law, of Contractors, subcontractors or other organizations, individuals or groups who prevent or seek to prevent directly or indirectly compliance with the policy as herein provided.

Prohibition on Kickbacks or Gratuities/Non-Gratuity. The undersigned acknowledges the following prohibitions on kickbacks and gratuities:

a. It is unethical for any person to offer, give or agree to give any employee or former employee a gratuity or an offer of employment in connection with any decision, approval, disapproval, recommendation, preparation or any part of a program requirement or a purchase request, influencing the content of any specification or procurement standard, rendering of advice, investigation, auditing or in any other advisory capacity in any proceeding or application, request for ruling, determination, claim or controversy or other particular matter pertaining to any program requirement or a contract or subcontract or to any solicitation or proposal therefor.
b. It is unethical for any employee or former employee to solicit, demand, accept or agree to accept from another person a gratuity or an offer of employment in connection with any decision, approval, disapproval, recommendation, preparation or any part of a program requirement or a purchase request, influencing the content of any specification or procurement standard, rendering of advice, investigation, auditing or in any other advisory capacity in any proceeding or application, request for ruling, determination, claim or controversy or other particular matter pertaining to any program requirement or a contract or subcontract or to any solicitation or proposal therefor.
c. It is also unethical for any payment, gratuity or offer of employment to be made by or on behalf of a subcontractor under a contract to the prime Contractor or higher tier subcontractor or any person associated therewith as an inducement for the award of a subcontract or order.

Declaration

Under penalty of perjury, I declare that I have examined this Contractor Disclosure Form and all attachments to it, if applicable, and, to the best of my knowledge and belief all statements contained herein and in any attachments, if applicable, are true, correct and complete.

I certify that this offer is made without prior understanding, agreement, or connection with any corporation, firm, or person submitting an offer for the same supplies, services, construction, or professional or consultant services, and is in all respects fair and without collusion or fraud. I understand collusive bidding is a violation of city, state and federal law and can result in fines, prison sentences, and civil damages awards. I agree to abide by all conditions of this solicitation and offer and certify that I am authorized to sign for this Respondent.

Sign here if you are an individual:

Printed Name: _____

Signature: _____

Date: _____

Subscribed and sworn to or affirmed by _____ (name) this ___ day of _____, 20__.

_____

Notary Public of _____(state)

My commission expires: _____

Sign here if you are an authorized representative of a responding entity or partnership:

Printed Name of Entity or Partnership: _____

Signature of authorized representative: _____

Title: _____

Date: _____, 20___

Subscribed and sworn to or affirmed by _____ (name), as the _____ (title) of _____ (entity or partnership name) this _____ day of _____, 20___.

_____

Notary Public of _____(state)

My commission expires: _____

FORM 3; PROPONENT FINANCIAL DISCLOSURE

[*NOT APPLICABLE FOR THIS ITB*]

Form 3; Proponent Financial Disclosure (NOT APPLICABLE FOR THIS ITB)

FORM 4A; CERTIFICATE OF INSURANCE

FORM 4-A

Certification of Insurance

Instructions: Offerors must submit a completed copy of this form executed by their insurance company. Failure to submit a completed form will result in the Offeror being deemed non-responsive.

I, _____ [*insert an individual's name*], on behalf of _____ [*insert insurance company name*], a _____ [*insert type of entity LLC, LLP, corporation, etc.*]("**Insurer**"), hereby represent and certify each of the following to the City of Atlanta, a municipal corporation of the State of Georgia ("**City**") on this _____ day of _____, 20____ [*insert date*]:

(a) Insurer is licensed by the Insurance and Safety Fire Commissioner of the State of Georgia to transact insurance business in the State of Georgia;

(b) Insurer has reviewed the Agreement attached to the solicitation for Project Number **FC-8071, Explosive Detection System (EDS) Recapitalization and Optimization Project** ("**Project**") and its **Exhibit D**; and

(c) Insurer certifies that if, as of the date written above, _____ ("**Offeror**") was selected as the successful Offeror for the Project, Insurer would provide insurance to Offeror for this Project in accordance with the terms set forth in **Exhibit D** attached to the Service Agreement.

PLEASE NOTE: If this form is executed by an Attorney-in-Fact, then Insurer must attach a copy of a duly executed Power-of-Attorney evidencing such authority in addition to correctly completing this form. If Offeror is unable to provide City with insurance that comply with the terms of Exhibit D attached to the Service Agreement within ten (10) days of receiving notice of intent to award the Project from the City, the City may, in its sole discretion, retain Offeror's security submitted with its offer and/or disqualify Offeror from further consideration for the award of the Agreement.

By executing this certification, Insurer represents that all of the information provided by Insurer herein is true and correct as of the date set forth above.

Insurer: [*insert company name on line provided below*]

_____

By:_____

Print Name:_____

Title:_____

_____
Corporate Secretary/Assistant Secretary
(Seal)

FORM 4B; CERTIFICATE OF BONDING ABILITY

FORM 4-B

Certification of Bonding Ability

Instructions: Offeror must submit a completed copy of this form executed by their surety. Failure to submit a completed form will result in the Offeror being deemed non-responsive.

I, _____ [*insert an individual's name*], on behalf of _____ [*insert surety full company name*], a _____ [*insert type of entity LLC, LLP, corporation, etc.*] ("**Surety**"), hereby represent and certify each of the following to the City of Atlanta, a municipal corporation of the State of Georgia ("**City**") on this _____ day of _____, 20____ [*insert date*]:

(a) Surety is licensed by the Insurance and Safety Fire Commissioner of the State of Georgia to transact surety business in the State of Georgia;

(b) Surety has reviewed the Agreement attached to the solicitation for Project Number **FC-8071, Explosive Detection System (EDS) Recapitalization and Optimization Project** ("**Project**") and its **Exhibit D**;

(c) Surety certifies that if, as of the date written above, _____ ("**Offeror**") was selected as the successful Offeror for the Project, Surety would provide bonding to Offeror for this Project in accordance with the terms set forth in **Exhibit D** attached to the Service Agreement; and

(d) The Surety states that Offeror's uncommitted bonding capacity (not taking into account this Project) is approximately $ _____ (U.S.). Surety's statement set forth in this Section does not represent a limitation of the bonding capacity of Offeror or that Offeror will have the bonding capacity noted above at the time of contract execution for this Project.

PLEASE NOTE: If this form is executed by an Attorney-in-Fact, then Surety must attach a copy of a duly executed Power-of-Attorney evidencing such authority in addition to correctly completing this form. If Offeror is unable to provide City with bonds that comply with the terms of Exhibit D attached to the Service Agreement within ten (10) days of receiving notice of intent to award the Project from the City, the City may, in its sole discretion, retain Offeror's security submitted with its offer and/or disqualify Offeror from further consideration for the award of the Agreement.

By executing this certification, Surety represents that all of the information provided by Surety herein is true and correct as of the date set forth above.

Surety: [*insert company name on line provided below*]

_____

By:_____

Print Name:_____

Title:_____

_____
Corporate Secretary/Assistant Secretary
(Seal)

FORM 5; ACKNOWLEDGEMENT OF ADDENDA

FORM 5

Acknowledgment of Addenda

Each Respondent must complete and submit and acknowledgement with its solicitation that it has received all Addenda issued for this solicitation. This form has been included and may be used to satisfy this requirement.

This is to acknowledge receipt of the following **Addenda** for **FC-8071, Explosive Detection System (EDS) Recapitalization and Optimization Project:**

☐ None (Check if None)

1. _____;
2. _____;
3. _____; and
4. _____.

Dated the _____ day of _____, 20___.

Corporate Proponent:
[Insert Corporate Name]

_____

By:_____

Name:_____

Title:_____

_____
Corporate Secretary/Assistant Secretary (Seal)

Non-Corporate Proponent:
[Insert Proponent Name]

_____

By:_____

Name:_____

Title:_____

_____
Notary Public (Seal)
My Commission Expires:

FORM 6; BIDDER CONTACT DIRECTORY

FORM 6

RESPONDENT CONTACT DIRECTORY

This Respondent Contact Directory should include the names, positions/titles, firms, mailing addresses, phone and fax numbers and e-mail addresses for each of the following as it pertains to each of the firms in a Respondent's team:

1. At least two individuals authorized to represent the firm for purposes of this Solicitation; and
2. All of Respondent's subcontractors (if any).

NAME	POSITION/TITLE	MAILING ADDRESS	PHONE NUMBER	FAX NUMBER	EMAIL ADDRESS

FORM 7 Reference List (N/A for this ITB)

FORM 8; BID BOND

FORM 8

Bid Bond

KNOW ALL MEN BY THESE PRESENTS, THAT WE_____

_____

hereinafter called the PRINCIPAL, and _____

_____

hereinafter called the SURETY, a corporation chartered and existing under the laws of the State of _____, and duly authorized to transact Surety business in the State of Georgia, are held and firmly bound unto the City of Atlanta, Georgia, in the penal sum of either: [i] _____ Dollars and Cents ($_____); or [ii] 5% of PRINCIPAL'S Bid amount for **PROJECT NUMBER FC-8071, EXPLOSIVE DETECTION SYSTEM (EDS) RECAPITALIZATION AND OPTIMIZATION – NORTH DOMESTIC TERMINAL PROJECT**, good and lawful money of the United States of America, to be paid upon demand of the City of Atlanta, Georgia, to which payment well and truly to be made we bind ourselves, our heirs, executors, administrators and assigns, jointly and severally and firmly by these presents.

WHEREAS the PRINCIPAL has submitted to the City of Atlanta, Georgia, for **PROJECT NUMBER FC-8071, EXPLOSIVE DETECTION SYSTEM (EDS) RECAPITALIZATION AND OPTIMIZATION – NORTH DOMESTIC TERMINAL PROJECT,** a Bid;

WHEREAS the PRINCIPAL desires to file this Bond in accordance with law, in lieu of a certified Bidder's check otherwise required to accompany this bid;

NOW THEREFORE: The conditions of this obligation are such that if the Bid be accepted, the PRINCIPAL shall within ten (10) calendar days after receipt of written notification from the CITY of the award of the Contract execute a Contract in accordance with the Bid and upon the terms, conditions and prices set forth therein, in the form and manner required by the City of Atlanta, Georgia, and execute sufficient and satisfactory Performance and Payment Bonds payable to the City of Atlanta, Georgia, each in the amount of one hundred percent (100%) of the total Contract price in form and with security satisfactory to said City of Atlanta, Georgia, then this obligation to be void; otherwise, to be and remain in full force and virtue in law; and the SURETY shall upon failure of the PRINCIPAL to comply with any or all of the foregoing requirements within the time specified above immediately pay to the City of Atlanta, Georgia, upon demand the amount hereof in good and lawful money of the United States of America, not as a penalty but as liquidated damages.

In the event suit is brought upon this Bond by the CITY and judgment is recovered, the SURETY shall pay all costs incurred by the CITY in such suit, including attorney's fees to be fixed by the Court.

Enclosed is a Bid Bond in the approved form, in the amount of either:

[i] _____ Dollars and Cents ($_____), being in the amount of 5% of the CONTRACT Sum; or [ii] 5% of PRINCIPAL'S Bid amount for **PROJECT NUMBER FC-8071, EXPLOSIVE DETECTION SYSTEM (EDS) RECAPITALIZATION AND OPTIMIZATION PROJECT – NORTH DOMESTIC TERMINAL**. The money payable on this bond shall be paid to the City of Atlanta, Georgia, for the failure of the Bidder to execute a CONTRACT within ten (10) days after receipt of the Contract form and at the same time furnish a Payment Bond and Performance Bond.

IN TESTIMONY THEREOF, the PRINCIPAL and SURETY have caused these presents to be duly signed and sealed this _____ day of 201__.

Corporate Bidder:
[Insert Corporate Name]

_____
By:_____
Name:_____
Title:_____

_____
Corporate Secretary/Assistant Secretary (Seal)

Non-Corporate Bidder:
[Insert Bidder Name]

_____
By:_____
Name:_____
Title:_____

_____
Notary Public (Seal)

My Commission Expires:_____

Surety:
Name:_____
By:_____
Name:_____
Title:_____

FORM 9; ESSENTIAL SUBCONTRACTOR QUALIFICATION STATEMENT

FORM 9

Essential Subcontractor Qualification Statement

This Form "9", Essential Subcontractor Qualification Statement is submitted for the following proposed Essential Subcontractor:

Company Name:_____ Phone:_____

Contact Person:_____ Email:_____

Address: _____ Facsimile:_____

_____

Number of Years in business:_____

Employee Category	Number of Employees in Category

Scope of Work to be performed by Subcontractor on this Project:_____

_____

As applicable:

License(s) held:_____ Number:_____ Expires:_____

_____ _____ _____

Certification(s) held:_____ Expires:_____

_____ _____

References: (a minimum of two (2) references are required)

1. Prime Contractor: Company Name _____

   Address _____

   City, State, Zip _____

   Phone _____

   E-mail _____

   Project Name: _____

   Location of Project: _____

   Contact Person: _____

   Phone Number: _____

   Date(s) of Project: _____

   Description/Summary of Services: _____

   Value/Amount of Subcontract: _____

2. Prime Contractor: Company Name _____

   Address _____

   City, State, Zip _____

   Phone _____

   E-mail _____

   Project Name: _____

   Location of Project: _____

   Contact Person: _____

   Phone Number: _____

   Date(s) of Project: _____

   Description/Summary of Services: _____

Value/Amount of Subcontract: _____

FORM 10; AIP FORMS

Form 10

MAJOR SHAREHOLDERS DISCLOSURE AFFIDAVIT
FC-8071

EDS RECAPITALIZATION AND OPTIMIZATION – NORTH DOMESTIC TERMINAL

CITY OF ATLANTA)
) SF.
ATLANTA, GEORGIA)

I, the undersigned, _____,
(*a partner or officer of the company of, etc.*)
being first duly sworn, deposes and says:

1. That the persons who have held more than ten percent (10%) of the company's shares during the past twelve months are as follows:

Name	Address	Percentage of Share Held	Dates Shares Held
	Total Number of Shares		

2. Persons who have received or are entitled to receive a commission, gratuity or other compensation for procuring or assisting in obtaining business related to the bid for which this Affidavit is submitted are as follows:

Name	Address	Amount of Commission or Other Compensation

Further, affiant sayeth naught.

Date: _____

_____
Signature of individual if bidder is a sole proprietorship, partner if the bidder is a partnership, officer if the bidder is a corporation.

_____
Notary Public
in and for the State of Georgia

My Commission Expires: _____

BIDDER'S STATEMENT ON PREVIOUS CONTRACTS
SUBJECT TO EEO CLAUSE

FC-8071
EDS RECAPITALIZATION AND OPTIMIZATION – NORTH DOMESTIC TERMINAL

The Bidder shall complete the following statement by checking the appropriate boxes.

The Bidder has ___ has not ___ participated in a previous Contract subject to the equal opportunity clause prescribed by Executive Order 11246, as amended, of September 24, 1965.

The Bidder has ___ has not ___ submitted all compliance reports in connection with any such Contract due under the applicable filling requirements; and that representations indicating submission of required compliance reports signed by proposed subcontractors will be obtained prior to award of subcontracts.

If the Bidder has participated in a previous Contract subject to the equal opportunity clause and has not submitted compliance reports due under applicable filing requirements, the bidder shall submit a compliance report on Standard Form 100, "Employee Information Report EEO - 100" prior to award of the Contract.

Certification - The information above is true and complete to the best of my knowledge and belief.

Date	Signature
Company Name	Title

NOTE: The penalty for making false statements in offers is prescribed in 18 U.S.C. 1001.

CERTIFICATION OF NONSEGREGATED FACILITIES
(CONTRACTORS/SUBCONTRACTORS)

FC-8071
EDS RECAPITALIZATION AND OPTIMIZATION – NORTH DOMESTIC TERMINAL

The federally-assisted construction contractor certifies that she or he does not maintain or provide, for his employees, any segregated facilities at any of his establishments and that she or he does not permit his employees to perform their services at any location, under his control, where segregated facilities are maintained. The federally-assisted construction contractor certifies that she or he will not maintain or provide, for his employees, segregated facilities at any of his establishments and that she or he will not permit his employees to perform their services at any location under his control where segregated facilities are maintained. The federally-assisted construction contractor agrees that a breach of this certification is a violation of the Equal Opportunity Clause in this contract.

As used in this certification, the term "segregated facilities" means any waiting rooms, work areas, restrooms, and washrooms, restaurants and other eating areas, time clocks, locker rooms and other storage or dressing areas, parking lots, drinking fountains, recreation or entertainment areas, transportation, and housing facilities provided for employees which are segregated by explicit directives or are, in fact, segregated on the basis of race, color, religion, or national origin because of habit, local custom, or any other reason. The federally-assisted construction contractor agrees that (except where she or he has obtained identical certifications from proposed subcontractors for specific time periods) she or he will obtain identical certifications from proposed subcontractors prior to the award of subcontracts exceeding $10,000 which are not exempt from the provisions of the Equal Opportunity Clause and that she or he will retain such certifications in his files.

Date	Signature
Company Name	Title

NOTE: The penalty for making false statements in offers is prescribed in 18 U.S.C. 1001.

CERTIFICATE REGARDING DEBARMENT AND SUSPENSION
(BIDDER OR OFFEROR)

FC-8071
EDS RECAPITALIZATION AND OPTIMIZATION – NORTH DOMESTIC TERMINAL

By submitting a bid/proposal under this solicitation, the bidder or offeror certifies that at the time the bidder or offeror submits its proposal that neither it nor its principals are presently debarred or suspended by any Federal department or agency from participation in this transaction.

Date	Signature
Company Name	Title

CERTIFICATION REGARDING DEBARMENT AND SUSPENSION
(SUCCESSFUL BIDDER REGARDING LOWER TIER PARTICIPANTS)

FC-8071
EDS RECAPITALIZATION AND OPTIMIZATION – NORTH DOMESTIC TERMINAL

The successful bidder, by administering each lower tier subcontract that exceeds $25,000 as a "covered transaction", must verify each lower tier participant of a "covered transaction" under the project is not presently debarred or otherwise disqualified from participation in this federally assisted project. The successful bidder will accomplish this by:

1. Checking the System for Award Management at website: http://www.sam.gov
2. Collecting a certification statement similar to the Certificate Regarding Debarment and Suspension (Bidder or Offeror), above.
3. Inserting a clause or condition in the covered transaction with the lower tier contract

If the FAA later determines that a lower tier participant failed to tell a higher tier that it was excluded or disqualified at the time it entered the covered transaction, the FAA may pursue any available remedy, including suspension and debarment.

Date	Signature
Company Name	Title

CERTIFICATION FOR CONTRACTS, GRANTS, LOANS, AND COOPERATIVE AGREEMENTS

FC-8071
EDS RECAPITALIZATION AND OPTIMIZATION – NORTH DOMESTIC TERMINAL

The bidder or offeror certifies by signing and submitting this bid or proposal, to the best of his or her knowledge and belief, that:

1) No Federal appropriated funds have been paid or will be paid, by or on behalf of the bidder or offeror, to any person for influencing or attempting to influence an officer or employee of an agency, a Member of Congress, an officer or employee of Congress, or an employee of a Member of Congress in connection with the awarding of any Federal contract, the making of any Federal grant, the making of any Federal loan, the entering into of any cooperative agreement, and the extension, continuation, renewal, amendment, or modification of any Federal contract, grant, loan, or cooperative agreement.

2) If any funds other than Federal appropriated funds have been paid or will be paid to any person for influencing or attempting to influence an officer or employee of any agency, a Member of Congress, an officer or employee of Congress, or an employee of a Member of Congress in connection with this Federal contract, grant, loan, or cooperative agreement, the undersigned shall complete and submit Standard Form-LLL, "Disclosure Form to Report Lobbying," in accordance with its instructions.

This certification is a material representation of fact upon which reliance was placed when this transaction was made or entered into. Submission of this certification is a prerequisite for making or entering into this transaction imposed by section 1352, title 31, U.S. Code. Any person who fails to file the required certification shall be subject to a civil penalty of not less than $10,000 and not more than $100,000 for each such failure.

Date	Signature
Company Name	Title

CERTIFICATE CONCERNING FOREIGN INTEREST

FC-8071
EDS RECAPITALIZATION AND OPTIMIZATION – NORTH DOMESTIC TERMINAL

The CONTRACTOR or subcontractor, by submission of an offer and/or execution of a Contract, certifies that it:

a. Is not owned or controlled by one or more citizens or nationals of a foreign country included in the list of countries that discriminate against U.S. firms published by the Office of the United States Trade Representative (USTR);

b. Has not knowingly entered into any Contract or subcontract for this project with a CONTRACTOR that is a citizen or a national of a foreign country on said list, or is owned or controlled directly or indirectly by one or more citizens or nationals of a foreign country on said list.

c. Has not procured any product nor subcontracted for the supply of any product for use on the project that is produced in a foreign country on said list.

Unless the restrictions of this clause are waived by the Secretary of Transportation in accordance with 49 CFR 30.17, no Contract shall be awarded to a CONTRACTOR or subcontractor who is unable to certify to the above. If the contractor knowingly procures or subcontracts for the supply of any product or service of a foreign country on the said list for use on the project, the Federal Aviation Administration may direct, through the sponsor, cancellation of the Contract at no cost to the Government.

Further, the CONTRACTOR agrees that, if awarded a Contract resulting from this solicitation, it will incorporate this provision for certification without modification in each Contract and in all lower tier subcontracts. The CONTRACTOR may reply upon the certification of a prospective subcontractor unless it has knowledge that the certification is erroneous.

The CONTRACTOR shall provide immediate written notice to the sponsor if the CONTRACTOR learns that its certification or that of a subcontractor was erroneous when submitted or has become erroneous by reason of changed circumstances. The subcontractor agrees to provide immediate written notice to the CONTRACTOR, if at any time it learns that its certification was erroneous by reason of changed circumstances.

This certification is a material representation of fact upon which reliance was placed when making the award. If it is later determined that the CONTRACTOR or subcontractor knowingly rendered an erroneous certification, the Federal Aviation Administration may direct, through the sponsor, cancellation of the Contract or subcontract for default at no cost to the Government.

Nothing contained in the foregoing shall be construed to require establishment of a system of records in order to render, in good faith, the certification required by this provision. The knowledge and information of a CONTRACTOR is not required to exceed that which is normally possessed by a prudent person in the ordinary course of business dealings.

This certification concerns a matter within the jurisdiction of an agency of the United States of America and the making of a false, fictitious, or fraudulent certification may render the maker subject to prosecution under Title 18, United States Code, Section 1001.

Certification - The information above is true and complete to the best of my knowledge and belief.

Date	Signature
Company Name	Title

CERTIFICATE OF BUY AMERICAN COMPLIANCE FOR TOTAL FACILITY
(BUILDINGS SUCH AS TERMINAL, SRE, ARFF, ETC.)

FC-8071
EDS RECAPITALIZATION AND OPTIMIZATION – NORTH DOMESTIC TERMINAL

As a matter of bid responsiveness, the bidder or offeror must complete, sign, date, and submit this certification statement with their proposal. The bidder or offeror must indicate how they intend to comply with 49 USC § 50101 by selecting one of the following certification statements. These statements are mutually exclusive. Bidder must select one or the other (i.e. not both) by inserting a checkmark (✓) or the letter "X".

☐ Bidder or offeror hereby certifies that it will comply with 49 USC. 50101 by:

a) Only installing steel and manufactured products produced in the United States; or
b) Installing manufactured products for which the FAA has issued a waiver as indicated by inclusion on the current FAA Nationwide Buy American Waivers Issued listing; or
c) Installing products listed as an Excepted Article, Material or Supply in Federal Acquisition Regulation Subpart 25.108.

By selecting this certification statement, the bidder or offeror agrees:

1. To provide to the Owner evidence that documents the source and origin of the steel and manufactured product.
2. To faithfully comply with providing US domestic products
3. To refrain from seeking a waiver request after establishment of the contract, unless extenuating circumstances emerge that the FAA determines justified.

☐ The bidder or offeror hereby certifies it cannot comply with the 100% Buy American Preferences of 49 USC § 50101(a) but may qualify for either a Type 3 or Type 4 waiver under 49 USC § 50101(b). By selecting this certification statement, the apparent bidder or offeror with the apparent low bid agrees:

1. To the submit to the Owner within 15 calendar days of the bid opening, a formal waiver request and required documentation that support the type of waiver being requested.
2. That failure to submit the required documentation within the specified timeframe is cause for a non-responsive determination may results in rejection of the proposal.
3. To faithfully comply with providing US domestic products at or above the approved US domestic content percentage as approved by the FAA.
4. To furnish US domestic product for any waiver request that the FAA rejects.
5. To refrain from seeking a waiver request after establishment of the contract, unless extenuating circumstances emerge that the FAA determines justified.

Required Documentation

Type 3 Waiver - The cost of components and subcomponents produced in the United States is more that 60% of the cost of all components and subcomponents of the "facility". The required documentation for a type 3 waiver is:

a) Listing of all manufactured products that are not comprised of 100% US domestic content (Excludes products listed on the FAA Nationwide Buy American Waivers Issued listing and products excluded by Federal Acquisition Regulation Subpart 25.108; products of unknown origin must be considered as non-domestic products in their entirety)

b) Cost of non-domestic components and subcomponents, excluding labor costs associated with final assembly and installation at project location.
c) Percentage of non-domestic component and subcomponent cost as compared to total "facility" component and subcomponent costs, excluding labor costs associated with final assembly and installation at project location.

Type 4 Waiver – Total cost of project using US domestic source product exceeds the total project cost using non-domestic product by 25%. The required documentation for a type 4 of waiver is:

a) Detailed cost information for total project using US domestic product
b) Detailed cost information for total project using non-domestic product

False Statements: Per 49 USC § 47126, this certification concerns a matter within the jurisdiction of the Federal Aviation Administration and the making of a false, fictitious or fraudulent certification may render the maker subject to prosecution under Title 18, United States Code.

Date	Signature
Company Name	Title

PART II

AGREEMENT

CITY OF ATLANTA
HARTSFIELD-JACKSON ATLANTA INTERNATIONAL AIRPORT

PROJECT NUMBER FC-8071

EXPLOSIVE DETECTION SYSTEM (EDS) RECAPITALIZATION AND OPTIMIZATION – DOMESTIC NORTH TERMINAL

AGREEMENT

Contractor:_____ Contract No._____

Address:_____Telephone:_____

Contact:_____Facsimile: _____

This Contract is effective as of the _____ day of_____, 2015, between CITY and the above named CONTRACTOR who hereby agree that all Work specified below shall be performed by the CONTRACTOR in accordance with all the provisions of this Contract, consisting of the following Contract Documents:

Exhibit "A" General Conditions
Exhibit "B" Special Conditions
Exhibit "C" Program Requirements
Exhibit "D" Insurance & Bonding/Construction Safety and Health Plan
Exhibit "E" Pricing Forms
Exhibit "F" Schedule Requirements
Exhibit "G" Quality Control Plan Requirements
Exhibit "H" Work Plan
Exhibit "I" Airport Security Requirements
Exhibit "J" Performance Bond
Exhibit "K" Payment Bond
Exhibit "L" Claim/Disputes Procedures
Exhibit "M" Statutory Lien Release for Design/Builder and Subcontractors
Appendix A; Office of Contract Compliance
Appendix B; Contract Administrative Forms
Appendix C; Wage Rates

1. WORK TO BE PERFORMED: Except as specified elsewhere in the Contract, CONTRACTOR shall furnish all plant; labor; materials; tools; supplies; equipment; transportation; supervision; technical, professional and other services; and shall perform all operations necessary and required to satisfactorily:

GENERAL SCOPE:

This project will consist of the design, procurement and construction required to modify the Checked Baggage Inspection System (CBIS) in the Domestic North Terminal. The CBIS will be modified as part of the TSA recapitalization program to comply with the TSA Planning Guidelines and Design Standards (PGDS) 4.2.

The EDS (Explosive Detection System) Recapitalization Project will be replacing the old EDS machines with the newest EDS machine, the CTX 9800. It will not be a one-for-one replacement since the new machines can screen bags at a higher rate than the existing CTX 9000 machines. The only existing conveyor equipment that will be replaced by this project is that which must be replaced to facilitate the installation of the new CTX 9800 machines. This includes any upgrades or replacement of existing conveyors, equipment, associated controls and electrical power necessary to accommodate the greater volume of bags to fewer lines.

The EDS Systems currently consist of 8 CTX 9000 machines. Each machine has one or two incoming lanes of conveyor that supply bags to the EDS machine and two lanes (one clear and one non-clear) that take away the bags from the machine. Together the incoming and outgoing system of conveyor lanes to and from an EDS machine is referred to as a shunt line. Each shunt line consists of approximately 60 to 70 linear feet of conveyor. Each existing shunt line has two or three High Speed Diverters (HSD), three or four merge belts, multiple belt sections, belt curves and multiple Variable Frequency Drives (VFD). The existing shunt lines will be removed under this project and replaced by new shunt lines. The new shunt lines will consist of two new HSDs, multiple queue belts, two vertical sortation devices (VSD) and one VFD per belt drive. Additionally, the project will be replacing any old HSDs with new ones and adding VFDs to all tracked belts in the system for better efficiency. All this conveyor work has electrical and controls work associated with it. Additionally, the EDS machines require an updated controls network because of the outdated network that is currently in place. All the program logic controllers (PLC) that control all the motors and drives that run the conveyors will have software upgrades and, in some cases where specified on the 30% drawings, hardware upgrades. The upper level controls which consist of the graphic interface will be upgraded (to reflect the layout changes) and the servers for the data bases will also be upgraded.

2. SCHEDULE: The Work shall be performed in accordance with the dates set forth in the Exhibit "B" Special Conditions, SC-2 clause titled "COMMENCEMENT, PROGRESS AND COMPLETION OF THE WORK."

3. COMPENSATION: As full consideration for the satisfactory performance by CONTRACTOR of this Contract, CITY shall pay to CONTRACTOR compensation in the amount of $_____, in accordance with the prices set forth in Exhibit "C" and the payment provisions of this Contract.

4. LEGISLATIVE RESOLUTION: This Contract is authorized by resolution attached, adopted by the Council of the City of Atlanta on _____, 2015 and approved by the Mayor of the CITY on _____, 2015.

This Contract embodies the entire agreement between CITY and CONTRACTOR and supersedes all other writings. The parties shall not be bound by or be liable for any statement, representation, promise, inducement or understanding not set forth herein.

OWNER:

CITY OF ATLANTA

_____
MAYOR

ATTEST:

_____
MUNICIPAL CLERK

APPROVED:

_____
AVIATION GENERAL MANAGER

_____
ASSISTANT AVIATION GENERAL MANAGER

_____
CHIEF PROCUREMENT OFFICER
DEPARTMENT OF PROCUREMENT

APPROVED AS TO FORM:

_____
CITY ATTORNEY

CONTRACTOR NAME:

_____

SIGNATURE:_____

PRINT:_____

TITLE:_____

ATTEST:

_____
SECRETARY/ASST. SECRETARY

[Affix Corporate Seal]

EXHIBIT A

GENERAL CONDITIONS

HARTSFIELD-JACKSON ATLANTA INTERNATIONAL AIRPORT
EXHIBIT "A" GENERAL CONDITIONS

Table of Contents

GC-01 DEFINITIONS 3
GC-02 CONTRACTORS OBLIGATIONS 6
GC-03 DESIGNATED REPRESENTATIVES 7
GC-04 NOTICES 8
GC-05 CONTRACT INTERPRETATION 8
GC-06 ORDER OF PRECEDENCE 8
GC-07 STANDARDS AND CODES 9
GC-08 LAWS AND REGULATIONS 9
GC-09 PERMITS 16
GC-10 TAXES 16
GC-11 TITLE AND RISK OF LOSS 17
GC-12 PERFORMANCE AND PAYMENT BONDS 17
GC-13 LABOR, PERSONNEL, AND WORK RULES 18
GC-14 ASSIGNMENTS AND SUBCONTRACTS 19
GC-15 COMMERCIAL ACTIVITIES 20
GC-16 PUBLICITY AND ADVERTISING 20
GC-17 ENVIRONMENTAL REQUIREMENTS 20
GC-18 HAZARDOUS SUBSTANCE AWARENESS 21
GC-19 HAZARDOUS SUBSTANCE REGULATIONS 21
GC-20 DECONTAMINATION OF EQUIPMENT AND MATERIALS 22
GC-21 ON-SITE HANDLING AND DISPOSAL OF HAZARDOUS MATERIAL 22
GC-22 OFF-SITE TRANSPORTATION AND DISPOSAL OF HAZARDOUS MATERIAL 22
GC-23 SITE CONDITIONS AND NATURAL RESOURCES 22
GC-24 DIFFERING SITE CONDITIONS 23
GC-25 TITLE TO MATERIALS FOUND 23
GC-26 SURVEY CONTROL POINTS AND LAYOUTS 24
GC-27 COOPERATION WITH OTHERS 24
GC-28 ILLUMINATION 25
GC-29 USE OF COMPLETED PORTIONS OF WORK 25
GC-30 USE OF CITY OR ITS DESIGNATED REPRESENTATIVES CONSTRUCTION EQUIPMENT OR FACILITIES 25

GC-31 INSPECTION AND QUALITY ASSURANCE 26
GC-32 MONITORING 27
GC-33 BACKCHARGES 27
GC-34 SUSPENSION OF WORK 28
GC-35 TERMINATION FOR DEFAULT 29
GC-36 TERMINATION FOR CONVENIENCE 31
GC-37 CHANGE DOCUMENTS 31
GC-38 PRICING OF ADJUSTMENTS 34
GC-39 EXCUSABLE DELAYS 37
GC-40 COMPLETION AND ACCEPTANCE 39
GC-41 WARRANTY AND COMPONENT WARRANTIES 39
GC-42 DISPUTES 42
GC-43 MUTUAL WAIVER OF CONSEQUENTIAL DAMAGES 45
GC-44 RECORDS AND AUDITS 45
GC-45 INDEMNITY 47
GC-46 PATENT AND INTELLECTUAL PROPERTY INDEMNITY 47
GC-47 NON-WAIVER 48
GC-48 ARCHAEOLOGICAL AND HISTORICAL FINDINGS 48
GC-49 EXPLOSIVES 49
GC-50 DRUGS, ALCOHOL, AND WEAPONS 49
GC-51 ESCROW DOCUMENTS 49
GC-52 MISCELLANEOUS 51

GC-01 DEFINITIONS

Airport means Hartsfield-Jackson Atlanta International Airport.

Award means when legislation authorizing the award of the contract has been adopted by the council and approved by the mayor, provided, however, that the contract will not become binding upon the city and the city will incur no liability under it until it has been duly executed by the contractor, returned to the city with all required submittals, including insurance and bonding, if applicable, executed by the mayor, attested to by the municipal clerk, approved by the city attorney as to form and delivered to the contractor.

Baggage Handling System Contractor means CONTRACTOR.

Beneficial Occupancy means the stage of construction before Substantial Completion or Final Acceptance, at which the CITY does occupy the building, structure or facility, or a portion thereof, for the purpose it was constructed.

Bid Guaranty means the security furnished with a Bid to guarantee that the Bidder will enter into a contract if his/her bid is accepted by the CITY.

Bidder means any individual, partnership, firm, or corporation, acting directly or through a duly authorized representative, who submits a Bid for the work contemplated.

Bi-Lateral Change Order means a written alteration in specification, delivery point, time and rate of delivery, period of performance, price, quantity or other provisions of the Contract accomplished by mutual action of the parties to the Contract and executed by both the CITY and CONTRACTOR."

Calendar Day means every day shown on the calendar.

Change Order (*unilateral*) means a written order signed and unilaterally issued by the chief procurement officer or other authorized individual, directing the contractor to make changes that the Changes Clause of the contract authorizes without the consent of the contractor.

CITY/OWNER/SPONSOR means the CITY of Atlanta and its designated representatives, employees and successors in interest.

Construction Manager (CM) means the team retained by the CITY to assist in the management of construction projects. The CM will represent the ENGINEER.

Contract Documents means the Form of Contact, Exhibits A through I and all Attachments, Appendices and other documents referenced therein is signed by both CITY and Contractor.

CONTRACTOR means any person having a contract with the city.

Contractor's Representative means the Contractor's executive representative who is present on the work during progress, authorized to receive and fulfill instructions from the ENGINEER, and who shall supervise and direct the construction.

Design/Build Contractor means Contractor.

DOA means the CITY of Atlanta's Department of Aviation.

ENGINEER means the Aviation Assistant General Manager – Planning and Development, an employee of the CITY of Atlanta Department of Aviation, and any of his designated representatives acting in their professional capacity.

Equipment means all machinery, together with the necessary supplies for upkeep and maintenance, and also all tools and apparatus necessary for the proper construction and acceptable completion of the work.

FAA means Federal Aviation Administration of the U.S. Department of Transportation. When used to designate a person, FAA shall mean the Administrator of his/her duly authorized representative.

Federal Specifications means Federal Specifications and Standards, and supplements, amendments and indices thereto which are prepared and issued by the General Services Administration of the Federal Government.

Final Acceptance means the CONTRACTOR has completed all Work included in the contract and a Final Acceptance letter has been issued by the ENGINEER indicating all requirements on the Final Acceptance Checklist are satisfied and all punchlist items are complete.

Firm means any individual, partnership, corporation, association, joint venture or other legal entity permitted by law to practice or offer professional or consultant services.

FIS means Federal Inspection Services.

H-JAIA means Hartsfield-Jackson Atlanta International Airport.

Inspector means an authorized representative of the ENGINEER assigned to make all necessary inspections and/or tests of the work performed or being performed, or of the materials furnished or being furnished by the CONTRACTOR.

Installer means the CONTRACTOR or another entity engaged by the CONTRACTOR, either as an employee, subcontractor or specialty contractor, to perform a particular construction activity, including installation, erection, application and similar operations. Installers are required to be experienced in the construction operations they are engaged to perform.

Invitation for Bids means all documents, whether attached or incorporated by reference, utilized for soliciting sealed Bids. No confidential or proprietary data shall be solicited in any invitation for Bids.

ISO means International Standards Organization.

Jobsite means the Hartsfield-Jackson Atlanta International Airport, Clayton County, Georgia, at which location construction activity shall be performed under this Contract.

Laboratory means official testing laboratories of the Owner or such other laboratories as may be designated by the ENGINEER.

Lump Sum Price means the full payment for performance of the work and covers all costs of whatever nature incurred by CONTRACTOR in accomplishing the Work in accordance with the provisions of the Contract.

Materials means any substance specified for use in the construction of the Contract work.

Notice to Proceed means a written notice from the CITY to the CONTRACTOR to begin the actual contract work.

OSHA means Occupational Safety and Health Administration. OSHA's mission is to prevent work-related injuries, illnesses, and deaths.

Payment Bond means a bond with good and sufficient surety or sureties payable to the governmental entity for which the work is to be done and intended for the use and protection of all Subcontractors and all persons supplying labor, materials, machinery, and equipment in the prosecution of the Work provided for in the Public Works Construction Contract.

Performance Bond means a bond with good and sufficient surety or sureties for the faithful performance of the Contract and to indemnify the governmental entity for any damages occasioned by a failure to perform the same within the prescribed time. Such bond shall be payable to, in favor of, and for the protection of the governmental entity for which the Work is to be done.

Plans means the official drawings or exact reproductions which show the location, character, dimensions and details of the airport and the Work to be done and which are to be considered as a part of the contract, supplementary to the specifications.

Project Manager (PM) means the designated representative in charge to coordinate, schedule, and monitor the progress of construction activities.

Project means the Hartsfield-Jackson Atlanta International Airport Project located at the jobsite for which the Work under this Contract is being performed.

Service means the furnishing of labor, time, or effort by a contractor, not involving the delivery of a specific end product other than reports which are merely incidental to the required performance.

Specifications mean a part of the Contract containing the written directions and requirements for completing the Contract Work. Standards for specifying materials or testing which are cited in the Contract specifications by reference shall have the same force and effect as if incorporated into the Contract.

Substantial Completion means the Project, or a specified portion thereof, shall be deemed Substantially Completed or having achieved Substantial Completion when (a) the Work is sufficiently complete in accordance with the Contract Documents so the Owner can occupy or utilize the Project, or a specified portion thereof, for its intended use, and (b) the Contractor has obtained on behalf of the Owner for the Project or specified portion thereof, all necessary permits and regulatory approvals necessary for the Owner to occupy and begin use or operation and (c) the Owner accepts the Project, or specified portion thereof, as being at Substantial Completion and issues a Notice of Substantial Completion.

Total Contract Price means the Contract value which is the sum of the product of all Contract Line Items extended as shown in Exhibit "C" titled "QUANTITIES, PRICING, AND DATA."

Utility System means any system at least five (5) feet underground, when installed or accessed by trenching, open cut, cut and cover, or other similar construction methods which install or access the system from the ground surface, including, but not limited to, gas distribution systems, electrical distribution systems, communication systems, water supply systems, sanitary sewerage and drainage systems, reservoirs and filtration plants, water and waste-water treatment plants, and pump stations, when the system distributes or collects a service, product, or commodity for which a fee or price is paid for said service, product, or commodity.

Work means the furnishing of all labor, materials, tools, equipment, and incidentals necessary or convenient to the CONTRACTOR's performance of all duties and obligations imposed by the contract, plans, and specifications.

GC-02 CONTRACTORS' OBLIGATIONS

CONTRACTOR represents that it is fully experienced, properly qualified, registered, licensed (licensed as a General Contractor in the State of Georgia per Georgia Law), equipped, organized, and financed to perform the Work under this Contract.

2.1 Subject to the provisions of this Agreement, CONTRACTOR hereby undertakes to cause and obtain the:

2.1.1 Design, permitting, construction, and commissioning of the Work in accordance with the Contract Documents,

2.1.2 To cause Substantial Completion of the same to occur on or before the Scheduled Completion Date, as the same may be extended pursuant to the provisions of this Contract, and

2.1.3 To equip the Project in accordance with the Contract Documents. Provided that CITY shall be in compliance with its payment obligations hereunder, all costs, expenses and expenditures in connection with the permitting, construction, and commissioning of the Work, including, without limitation, the amounts owing to the, Subcontractors and Suppliers for supervision, transportation, labor, materials or Permits or other matters in connection with the Work, shall be paid by CONTRACTOR.

2.2 CONTRACTOR shall manage, direct and cause the design, permitting, construction, commissioning and equipping of the Work, and shall coordinate the activities of all Subcontractors and Suppliers involved therein. CONTRACTOR shall meet with Persons providing construction Work on a regular and frequent basis and as specifically provided herein in order to assure the performance of the Work in accordance with the terms of this Agreement. To the extent CONTRACTOR has, obtains, or retains rights under any Subcontract pertaining to the Work, CONTRACTOR will exercise such rights in accordance with all approval and consent

provisions provided to CITY in this Contract. CONTRACTOR shall ensure that all warranties provided by the Subcontractors are consistent with the terms of this Contract.

2.3 CONTRACTOR shall provide all labor, materials, equipment and all services required to implement the design and construction scope defined by the Contract Documents, as approved by CITY.

2.4 CONTRACTOR shall be responsible for the professional quality, technical accuracy, and other non-construction services furnished by the CONTRACTOR under this Contract. The CONTRACTOR shall, without additional compensation, correct or revise any errors in construction and other non-construction services and perform any necessary rework or modifications including any damage to real personal property for Work performed by the CONTRACTOR, its Subcontractors and its Suppliers, under this Contract.

2.5 Independent CONTRACTOR. CONTRACTOR shall act as an independent CONTRACTOR and not as the agent of CITY in performing this Contract, maintaining complete control over its employees and all of its Subcontractors. Nothing contained in this Contract or any Subcontract awarded by CONTRACTOR shall create any contractual relationship between any Subcontractor and CITY. CONTRACTOR shall perform the Work hereunder in accordance with its own methods subject to compliance with this Contract.

GC-03 DESIGNATED REPRESENTATIVES

3.1 Designation of ENGINEER. CITY hereby designates the Assistant Aviation General Manager, Planning and Development, a full-time employee of the Department of Aviation, as ENGINEER for this Contract. The ENGINEER shall carry out the CITY's duties specified in this Contract, or necessarily to be implied from this Contract.

3.2 ENGINEER's Representative. ENGINEER may appoint a representative who shall carry out such duties and exercise such authority as may be delegated to him. Any communication given by ENGINEER's representative shall have the same effect as though it had been given by CITY; provided that any failure of ENGINEER to disapprove or reject any work shall not prejudice the authority of ENGINEER to disapprove such work or to give instructions for the recertification of defects.

3.3 ENGINEER's Discretion. Whenever, under this Contract, ENGINEER is required to exercise his discretion by giving a decision, opinion, or consent; by expressing his satisfaction or approval; or by determining values, he shall exercise such discretion reasonably, fairly, and impartially within the terms of this Contract.

3.4 CONTRACTOR's representative. Before starting work, CONTRACTOR shall designate, in writing, an authorized representative acceptable to ENGINEER to represent and act for CONTRACTOR and shall specify any and all limitations of such representative's authority. This representative shall represent the CONTRACTOR during both the design and construction phases. Such representative shall be present at the Jobsite at all times when Work is in progress; shall, together with other appropriate CONTRACTOR personnel, be available for meetings as required by ENGINEER; shall be empowered to receive communications in accordance with this Contract on behalf of CONTRACTOR. During periods when the Work is

suspended, arrangements shall be made for an authorized representative acceptable to ENGINEER to be available for any emergency work that may be required. All communications given to the authorized representative by ENGINEER or by a designated representative, in accordance with this Contract shall be binding upon CONTRACTOR.

3.5 Notification of Changes in Representatives. Notification of changes of authorized representatives for either CITY or CONTRACTOR shall be provided in advance, in writing, to the other party.

GC-04 NOTICES

4.1 Delivery. All notices, demands, consents, approvals and requests given by either party to the other under this Contract shall be in writing and may be delivered by (i) regular mail, postage prepaid; (ii) certified or registered mail; (iii) facsimile; or (iv) hand-delivery, to the parties at the addresses and facsimile numbers set forth in the Clause titled "ADDRESSES."

4.2 Receipt. Notices sent by mail shall be deemed to be received upon deposit in the mail, properly addressed. Notices sent by certified or registered mail shall be deemed to be received upon acknowledgement. Notices sent by facsimile shall be deemed to be received upon successful transmission to the proper facsimile number. Notices delivered by hand-delivery shall be deemed to be received upon acceptance by the respective party or its agent.

4.3 Change of Address or Facsimile Number. Either party may, at any time, change its respective address or facsimile number by sending written notice to the other party of the change by registered or certified mail, postage prepaid, to the respective addresses set forth in this clause.

GC-05 CONTRACT INTERPRETATION

All questions concerning interpretation or clarification of this Contract or applicable standards and codes, including the discovery of conflicts, discrepancies, errors or omissions, or the acceptable performance thereof by CONTRACTOR, shall be immediately submitted in writing to ENGINEER for resolution. Subject to the provisions of the Clause titled "CHANGE DOCUMENTS", all determinations, instructions, and clarifications of ENGINEER shall be final and conclusive unless determined to have been fraudulent or capricious, or arbitrary, or so grossly erroneous as necessarily to imply bad faith, or not supported by substantial evidence. At all times CONTRACTOR shall proceed with the Work in accordance with the determinations, instructions, and clarifications of ENGINEER. CONTRACTOR shall be solely responsible for requesting instructions or interpretations and shall be solely liable for any costs and expenses arising from its failure to do so.

GC-06 ORDER OF PRECEDENCE

6.1 Precedence of Contract Documents. All Contract Documents, and subsequently formally executed Addendums, Amendments or Modifications to the Contract Documents, are essential parts of this Contract and a requirement or provision contained in one is binding as though contained in all. In resolving conflicts, discrepancies, errors or omissions, including, but

not limited to, interpretations pursuant to the Clause titled "CONTRACT INTERPRETATION", the following order of precedence will be used:

6.1.1 Change Order(s);

6.1.2 Legislation;

6.1.3 Agreement;

6.1.4 Exhibit C-4;

6.1.5 Exhibit A, Construction Contract General Conditions;

6.1.6 Exhibit B, Construction Contract Special Conditions;

6.1.7 Exhibit D, Insurance and Bonding/Construction Safety and Health Plan;

6.1.8 Exhibit G, Airport Security Program;

6.1.9 Exhibit H, Schedule Requirements;

6.1.10 Exhibit I, Quality Control Program;

6.1.11 Exhibit E, Technical Specifications;

6.1.12 Exhibit F, Contract Drawings;

6.1.13 CONTRACTOR Submittals.

6.2 Interpretation Not Affected. The organization of this Contract into articles, sections, paragraphs, and subparagraphs, the Table of Contents and the insertion of headings and subheadings are for convenience and reference only and shall not modify or affect the meaning, interpretation, construction, or effect of this Contract nor the rights, obligations, and liabilities of the parties.

GC-07 STANDARDS AND CODES

Wherever references are made in this Contract to standards or codes in accordance with which the Work under this Contract is to be performed, the edition or revision of the standards or codes current on the effective date of this Contract shall apply unless otherwise expressly stated. In case of conflict between any referenced standards and codes and any Contract Documents, the law and the code shall prevail over Contract Documents.

GC-08 LAWS AND REGULATIONS

8.1 Compliance with Applicable Law. CONTRACTOR must comply with all applicable federal, state, or local statues, laws, ordinances, codes, rules, regulations, standards, executive orders, consent orders, orders and guidance from regulatory agencies, judicial decrees,

permits, licenses or other governmental requirements of any kind, then in effect or which come into effect during the Work being performed, and any present or future amendments to those Governmental Requirements, which specifically relate to (i) the business of the CITY; (ii) the business of the CONTRACTOR or the CONTRACTOR's Subcontractors; (iii) the Contract and the Contract Documents; (iv) the performance of the Work under this Contract by the CONTRACTOR and its Subcontractors; (v) the Airport; (vi) the Transportation Security Administration (TSA) and Federal Aviation administration (FAA) security requirements; or (vii) any other matters relating to this Contract.

8.2 Applicable Law. This Contract shall be governed by and interpreted under the laws of the State of Georgia. The parties fix venue and jurisdiction for any actions brought in connection with this Contract in Fulton County, Georgia.

8.3 Jurisdiction and Venue. The parties submit and consent to the exclusive jurisdiction of the state courts of Fulton County, Georgia or the United States District Court for the Northern District of Georgia and irrevocably agree that all actions or proceedings relating to this Agreement will be litigated in such courts and each of the Parties waives any objection which it may have based on improper venue or forum non conveniens to the conduct of any such action or proceeding in such courts.

8.4 Equitable Remedies. The Parties agree that, notwithstanding the provisions of "Dispute Resolution", due to the unique nature of either Party's Confidential Information, there may not be an adequate remedy at law for a breach of the Section titled "Confidential Information", which breach may result in irreparable harm to the non-disclosing Party. Accordingly, in such instance, the non-breaching Party will be entitled to appropriate equitable relief in addition to whatever remedies it might have at law.

8.5 Notice of Inconsistencies. If CONTRACTOR discovers any discrepancy or inconsistency between this Contract and any law, ordinance, statute, rule, regulation, order or decree, CONTRACTOR shall report the same immediately, in writing, to ENGINEER.

8.6 Utility Contractor Licensing Requirements. CONTRACTOR shall comply with the requirements of O.C.G.A. § 43-14-8.2 (b) which states:

8.7 Sec.2-1295 – Copyrights and Rights in Data. Under this article, if a contract is being funded by the city, the contract shall include a provision giving the CONTRACTOR notice that the city shall have the right to any plans, drawings, specifications, computer programs, technical reports, operating manuals and similar work products developed and paid for under the contract.

8.8 Confidential Information.

8.8.1 General. Each Party agrees to preserve as strictly confidential all Confidential Information of the other Party for two (2) years following the expiration or termination of this Agreement; provided, however, that each Party's obligations for the other Party's Confidential Information that constitutes trade secrets pursuant to Applicable Law will continue for so long as such Confidential Information continues to constitute a trade secret under Applicable Law.

Any Confidential Information that may be deemed Sensitive Security Information by the Department of Homeland Security or any other similar Confidential Information related to security will be considered trade secrets. Upon request by City, CONTRACTOR will return any trade secrets to City. Each Party agrees to hold the Confidential Information of the other in trust and confidence and will not disclose it to any Person, or use it (directly or indirectly) for its own benefit or the benefit of any other Person other than in the performance of its obligations under this Agreement.

8.8.2 Disclosure of Confidential Information or Information Other Party Deems to be Confidential Information. Each Party will be entitled to disclose any Confidential Information if compelled to do so pursuant to: (i) a subpoena; (ii) judicial or administrative order; or (iii) any other requirement imposed upon it by Applicable Law. Prior to making such a disclosure, to the extent allowed pursuant to Applicable Law, each Party must provide the other with thirty six (36) hours prior notice by facsimile of its intent to disclose, describing the content of the information to be disclosed and providing a copy of the pleading, instrument, document, communication or other written item compelling disclosure or, if not in writing, a detailed description of the nature of the communication compelling disclosure with the name, address, phone number and facsimile number of the Person requesting disclosure. Should the non-disclosing Party contest the disclosure, it must: a) seek a protective order preventing such disclosure; or b) intervene in such action compelling disclosure, as appropriate. This Section will be applicable to information that one Party deems to be Confidential Information but the other Party does not.

8.9 Work Product.

8.9.1 Except as otherwise expressly provided in this Agreement, all reports, information, data, specifications, computer programs, technical reports, operating manuals and similar Work or other documents, all deliverables and other Work Product prepared or authored by CONTRACTOR or any of its Subcontractors exclusively for City under this Contract and all intellectual property rights associated with the foregoing items (collectively, the "Work Product") will be and remain the sole and exclusive property of City. Any of CONTRACTOR's or its Subcontractors' works of authorship comprised within the Work Product (whether created alone or in concert with City or Third Party) will be deemed to be "works made for hire" and made in the course of Work rendered and, whether pursuant to the provisions of Section 101 of the U.S. Copyright Act or other Applicable Law, such Work Product will belong exclusively to City. CONTRACTOR and its Subcontractors grant City a non-exclusive, perpetual, worldwide, fully paid up, royalty free license to all Work Product not exclusively developed for City under this Agreement.

8.9.2 If any of the Work Product is determined not to be a work made for hire, CONTRACTOR assigns to City, worldwide and in perpetuity, all rights, including proprietary rights, copyrights and related rights and all extensions and renewals of those rights, in the Work Product. If CONTRACTOR has any rights to the Work Product that cannot be assigned to City, CONTRACTOR unconditionally and irrevocably waives the enforcement of such rights and irrevocably grants to City during the term of such rights an exclusive, irrevocable, perpetual, transferable, worldwide, fully paid and royalty-free license, with rights to sublicense through multiple levels of sublicensees, to reproduce, make, have made, create derivate works of, distribute, publicly perform and publicly display by all means, now known or later developed, such rights.

8.9.3 City will have the sole and exclusive right to apply for, obtain, register, hold and renew, in its own name or for its own benefit, all patents, copyrights, applications and registrations, renewals and continuations and all other appropriate protection.

8.9.4 To the extent exclusive title or complete and exclusive ownership rights in any Work Product created by CONTRACTOR or its Subcontractor(s) may not originally vest in City by operation of Applicable Law, CONTRACTOR and its Subcontractors must, immediately upon request, unconditionally and irrevocably assign, transfer and convey to City all rights, title and interest in the Work Product.

8.9.5 Without any additional cost to City, CONTRACTOR and its Subcontractors must promptly give City all reasonable assistance and execute all documents City may reasonably request to enable City to perfect, preserve, enforce, register and record its rights in all Work Product. CONTRACTOR and its Subcontractors irrevocably designate City as agent and attorney-in-fact to execute, deliver and file, if necessary, any documents necessary to give effect to the provisions of this Section and to take all actions necessary, in CONTRACTOR's or its Subcontractor's name, with the same force and effect as if performed by CONTRACTOR or its Subcontractor.

8.10 Sec.2-1213. Prohibition against contracting with predatory or high cost lenders.

8.10.1 The CITY, and those authorized to act on its behalf, shall not enter into any contract with any person or business entity that is a predatory or a high cost lender, or an affiliate thereof, as defined in Code Section 58-102.

8.10.2 Every CITY contract and purchase order shall contain a provision requiring that the person or business entity with which the CITY is contracting certify, under penalty of perjury, that neither the person, or business entity, nor any of its affiliates is a high cost lender or a predatory lender, as provided by Code Section 58-102. All contractors shall identify a person having authority to sign for the CONTRACTOR who shall certify, in writing, as follows:

> I certify, under penalty of perjury, that this offer is made by a person or business entity that is neither a high cost lender nor a predatory lender, nor is the CONTRACTOR an affiliate of a high cost lender or a predatory lender, as defined by City of Atlanta Code Section 58-102. I further certify that I am an agent duly authorized to sign this certification on behalf of the contracting party.

8.10.3 Any person or business entity that provides a false affidavit shall be subject to any or all of the following penalties:

> **8.10.3.1** Withholding of ten percent (10%) of all future payments under the involved contract until it is determined that the person, or business entity, is in compliance with this section.
>
> **8.10.3.2** Withholding of all future payments under the involved contract until it is determined that the person, or business entity, is in compliance with this section.

8.10.3.3 Cancellation of the involved contract.

8.10.4 Nothing in this section shall affect the validity of any contract entered into in connection with any debt obligations issued by or on behalf of the CITY, regardless of whether the contract was awarded in compliance with this Clause.

8.11 Sec.2-1200. Equal employment opportunity Clause

8.11.1 During the performance of this agreement, said CONTRACTOR agrees as follows:
8.11.1.1 The CONTRACTOR shall not discriminate against any employee, or applicant for employment, because of race, color, creed, religion, sex, domestic relationship status, parental status, familial status, sexual orientation, national origin, gender identity, age, disability, or political affiliation. As used here, the words "shall not discriminate" shall mean and include without limitation the following:

8.11.1.1.1 Recruited, whether by advertising or other means; compensated, whether in the form of rates of pay, or other forms of compensation; selected for training, including apprenticeship; promoted; upgraded; demoted; downgraded; transferred; laid off; and terminated.

8.11.1.1.2 The CONTRACTOR agrees to and shall post in conspicuous places, available to employees and applicants for employment, notices to be provided by the contracting officers setting forth the provisions of the EEO clause.

8.11.2 The CONTRACTOR shall, in all solicitations or advertisements for employees, placed by or on behalf of the CONTRACTOR, state that all qualified applicants will receive consideration for employment without regard to race, color, creed, religion, sex, domestic relationship status, parental status, familial status, sexual orientation, national origin, gender identity, age, disability, or political affiliation.

8.11.3 The CONTRACTOR shall send to each labor union or representative of workers with which the CONTRACTOR may have a collective bargaining agreement or other contract or understanding a notice advising the labor union or workers' representative of the CONTRACTOR's commitments under the equal employment opportunity program of the City of Atlanta and under the Code of Ordinances and shall post copies of the notice in conspicuous places available to employees and applicants for employment. The CONTRACTOR shall register all workers in the skilled trades who are below the journeyman level with the U.S. Bureau of Apprenticeship and Training.

8.11.4 The CONTRACTOR shall furnish all information and reports required by the contract compliance officer pursuant to the Code of Ordinances, and shall permit access to the books, records, and accounts of the CONTRACTOR during normal business hours by the contract compliance officer for the purpose of investigation so as to ascertain compliance with the program.

8.11.5 The CONTRACTOR shall take such action with respect to any Subcontractor as the city may direct as a means of enforcing the provisions of paragraphs (a) through (h) herein, including penalties and sanctions for noncompliance; provided, however, that in the event the CONTRACTOR becomes involved in or is threatened with litigation as a result of such direction by the city, the city will enter into such litigation as is necessary to protect the interest of the city and to effectuate the equal employment opportunity program of the city; and, in the case of contracts receiving federal assistance, the CONTRACTOR or the city may request the United States to enter into such litigation to protect the interests of the United States.

8.11.6 The CONTRACTOR and its Subcontractors, if any, shall file compliance reports at reasonable times and intervals with the city in the form and to the extent prescribed by the contract compliance officer. Compliance reports filed at such times directed shall contain information as to employment practices, policies, programs and statistics of the CONTRACTOR and its Subcontractors.

8.11.7 The CONTRACTOR shall include the provisions of paragraphs (a) through (h) of this equal employment opportunity clause in every subcontract or purchase order so that such provisions will be binding upon each Subcontractor or vendor.

8.11.8 A finding, as hereinafter provided, that a refusal by the CONTRACTOR or Subcontractor to comply with any portion of this program, as herein provided and described, may subject the offending party to any or all of the following penalties:

8.11.8.1 Withholding from the CONTRACTOR in violation all future payments under the involved contract until it is determined that the CONTRACTOR or Subcontractor is in compliance with the provisions of the contract;

8.11.8.2 Refusal of all future bids for any contract with the City of Atlanta or any of its departments or divisions until such time as the CONTRACTOR or Subcontractor demonstrates that there has been established and there shall be carried out all of the provisions of the program as provided in the Code of Ordinances;

8.11.8.3 Cancellation of the public contract;

8.11.8.4 In a case in which there is substantial or material violation of the compliance procedure herein set forth or as may be provided for by the contract, appropriate proceedings may be brought to enforce those provisions, including the enjoining, within applicable law, of CONTRACTORs, Subcontractors or other organizations, individuals or groups who prevent or seek to prevent directly or indirectly compliance with the policy as herein provided.

8.12 Ethics: Gratuities and Kickbacks.

8.12.1 Gratuities and Kickbacks. In accordance with the City of Atlanta's Code of Ordinances, Section 2-1484, as may be amended, it shall be unethical for any person to

offer, give or agree to give any employee or former employee or for any employee or former employee to solicit, demand, accept or agree to accept from another person a gratuity or an offer of employment in connection with any decision, approval, disapproval, recommendation, preparation or any part of a program requirement or a purchase request, influencing the content of any specification or procurement standard, rendering of advice, investigation, auditing or in any other advisory capacity in any proceeding or application, request for ruling, determination, claim or controversy or other particular matter pertaining to any program requirement or a contract or subcontract or to any solicitation or proposal therefore. Additionally, it shall be unethical for any payment, gratuity or offer of employment to be made by or on behalf of a subcontractor under a contract to the prime contractor or higher tier subcontractor or any person associated therewith as an inducement for the award of a subcontract or order.

8.12.2 Rights and Remedies. The rights and remedies of CITY provided in this Clause shall not be exclusive and are in addition to any other rights and remedies provided by law or under this Contract.

8.12.3 Contingent Fees. The CONTRACTOR warrants that it has not employed nor retained any company or person, other than a bona fide employee working for the vendor or CONTRACTOR or firm, to solicit or secure the Contract; and that the vendor or CONTRACTOR or firm has not paid or agreed to pay any person, company, association, corporation, individual, or firm, other than a bona fide employee working for the vendor or CONTRACTOR or firms, any fee, commission, percentage, gift or any other consideration contingent upon or resulting from the award or making of the Contract. For the breach or violation of the above warranty, and upon a finding after notice and hearing, CITY shall have the right to terminate the Contract, and, at its discretion, to deduct from the Contract price, or otherwise recover the full amount of such fee, commission, percentage, gift or consideration.

8.12.4 Fraud and misrepresentation. Any written or oral information provided by [insert as appropriate "Contractor" or Service Provider"], directly or indirectly related to the performance of the services required by this Agreement, constitutes material representations upon which the City relies for the requirements of the Agreement and compliance with local, state and federal laws, rules and regulations. [Contractor] agrees to notify the City immediately of any information provided to the City that it knows and/or believes to be false and/or erroneous and immediately provide correct information to the City and take corrective action. [Contractor] further agrees to notify the City immediately of any actions or information that it believes would constitute fraud or misrepresentation to the City in performance of this Agreement, whether or not such information actually constitutes fraud and/or misrepresentations, by contacting the Integrity Line 1-800-884-0911. [Contractor] agrees to place signage provided by the City regarding the Integrity Line at the location to which [Contractor's] employees report to perform the services required by this Agreement. [Contractor] acknowledges and agrees that a finding of fraud or other impropriety on the part of the [Contractor] or any of its [subcontractors] may result in suspension or debarment of the [Contractor]; and the City may pursue any other actions or remedies that the City may deem appropriate. [Contractor] agrees to include this clause in its [subcontracts] and take appropriate measures to ensure compliance with this provision.

8.13 **Sec. 2-1109 Compliance with Federal Requirements.** When the procurement or real estate transaction involves the expenditure of federal assistance or contract funds, the procurement or real estate transaction shall be conducted in accordance with any applicable mandatory federal law and authorized regulations which are not reflected in this article. Notwithstanding, where federal assistance or contract funds are used in a procurement or real estate transaction, requirements that are more restrictive than federal requirements shall be followed.

8.14 **Sec. 2-1273 Wage Requirements for Construction Contracts.** Unless otherwise required or if federally assisted, when a construction project exceeds the sum of $10,000.00, the prevailing wages paid shall correspond as nearly as practicable to the prevailing wages required in the federal Davis Bacon Act. Such scale of wages to be paid shall be posted by the CONTRACTOR in a prominent and easily accessible place at the site of work.

8.15 **Sec. 2-1291 Responsibilities and Rights of Parties to Contract**. CONTRACTOR acknowledges that this contract and any changes to it by amendment, modification, change order or other similar document may have required or may require the legislative authorization of the City's Council and approval of the Mayor. Under Georgia law, CONTRACTOR is deemed to possess knowledge concerning the City's ability to assume contractual obligations and the consequences of CONTRACTOR's provision of goods or services to the City under an unauthorized contract, amendment, modification, change order or other similar document, including the possibility that the CONTRACTOR may be precluded from recovering payment for such unauthorized goods or services. Accordingly, CONTRACTOR agrees that if it provides goods or services to the City under a contract that has not received proper legislative authorization or if the CONTRACTOR provides goods or services to the City in excess of the any contractually authorized goods or services, as required by the City's Charter and Code, the City may withhold payment for any unauthorized goods or services provided by CONTRACTOR. CONTRACTOR assumes all risk of non-payment for the provision of any unauthorized goods or services to the City, and it waives all claims to payment or to other remedies for the provision of any unauthorized goods or services to the City, however characterized, including, without limitation, all remedies at law or equity.

GC-9 PERMITS

Responsibility of Permits. Except as otherwise specified, CONTRACTOR shall procure and pay for all permits, licenses, certifications, and other applicable governing authority requirements and inspections, other than inspections performed by the CITY, and shall furnish any documentations, bonds, security or deposits required to permit performance of the Work.

GC-10 TAXES

CONTRACTOR shall pay all taxes, levies, duties, and assessments of every nature due in connection with the Work under this Contract and shall make any and all payroll deductions and withholdings required by law, and hereby indemnifies and holds harmless the CITY, from any liability on account of any and all such taxes, levies, duties, assessments, and deductions.

GC-11 TITLE AND RISK OF LOSS

11.1 Title to Goods. Where Contractor fabricates or purchases equipment, materials or other tangible items (Goods) for incorporation into the Work or any of its separate parts, the title of such Goods shall be vested in CITY when the first of the following events occurs:

11.1.1 The Goods or part thereof is first identifiable as being appropriated to this Contract,

11.1.2 When CITY pays for the Goods or part thereof in accordance with this Contract, or

11.1.3 When the Goods or part thereof are dispatched to or from Contractor's fabrication yard or to the Jobsite.

11.2 CITY's Right to Reject Goods/Materials. However such transfer of title in the Goods will be without prejudice to CITY's right to reject the Goods/Materials in case of non-conformity with the requirements of this Contract. Irrespective of transfer of title in the Goods/Materials, CONTRACTOR shall remain responsible for risk of loss or damage to work in progress and all Goods until Final Acceptance. CONTRACTOR shall ensure that the above provisions are imposed upon its suppliers and Subcontractors and shall execute all documents and take all steps necessary to vest title in accordance with this Clause.

11.3 Title to Bulk Goods. Title to standard Goods of the type usually bought in bulk such as reinforcement bars, piping materials, non-tagged instruments and instrument installation material, cable and similar items which are not incorporated into the Work shall revert to CONTRACTOR upon agreement by the CITY that such Goods are not required for the Work.

GC-12 PERFORMANCE AND PAYMENT BONDS

12.1 Bonding Requirements. CONTRACTOR, at its sole expense, shall maintain in effect at all times during the performance of the Work Performance and Payment Bonds each in an amount with limits not less than those set forth in this article. All Bonds shall be issued in a form and by a Surety acceptable to the CITY and contain the Surety's waiver of notice of all contract changes, including, but not limited to, increase or decrease in scope, value, and schedule acceleration or deceleration. Upon satisfactory completion of all Contract obligations, CITY shall return such securities to Contractor.

12.1.1 CONTRACTOR shall, at the time of execution of this Contract, furnish CITY a Performance Bond and a Payment Bond for the Work under this Contract, each in an amount equal to one hundred percent (100%) of the Contract value. The person executing the Bonds on behalf of the Surety shall file with the Bonds a general power of attorney as to amount and type of the Bonds covered by such power of attorney, and certified by an official of said Surety.

12.2 Corporate Surety. Bonds shall be executed by a corporate Surety (insurance company), which is satisfactory to CITY and meets the following minimum financial security requirements:

12.2.1 Have a current Best's rating of not less than A-, and current, and;

12.2.2 Have a Best's financial size category of not less than Class IX, and;

12.2.3 Be authorized by the Georgia Insurance Commissioner pursuant to a valid and current Certificate of Authority to conduct and transact Surety business in the State of Georgia, and;

12.2.4 Be a U.S. Treasury Circular 570 listed company.

The Bonds shall be submitted and will be dated by the CITY upon execution of the Contract. The Surety shall appoint an agent for service in Atlanta, Georgia upon whom all notices shall be served. The person executing the Bonds on behalf of the Surety shall file with the Bonds a general power of attorney unlimited as to amount and type of Bonds covered by such power of attorney, and certified to by an official of said Surety. The Bonds shall be on forms provided by CITY, and subject to increase for any alterations, extension of the time allows for performance, extra or additional work and any other changes authorized under this Contract.

12.3 Amendment to Bonds. In the event the Contract Price is increased, CONTRACTOR shall deliver to CITY an amendment or Rider to the Payment and Performance Bonds increasing the final amounts of the Bonds to the new Contract Price, or new Bonds shall be furnished in the final amount of the new Contract Price. These Bonds shall remain in effect through the period of performance, including the period of warranty, and as required under Georgia law for Bonds on Public construction contracts.

12.4 Related Obligations.

12.4.1 No limitations. The requirements contained herein as to forms and limits, as well as CITY's approval of Bond coverage to be maintained by CONTRACTOR, are not intended to and shall not in any manner limit or qualify the liabilities and obligations assumed by CONTRACTOR under this Contract.

12.4.2 Use of Facilities. CONTRACTOR agrees that it will not use the facilities for any purpose which might void any Bond covering the Work or render any loss under any Bond uncollectible.

GC-13 LABOR, PERSONNEL, AND WORK RULES

13.1 Qualifications and Procedures. CONTRACTOR shall employ only competent and skilled personnel to perform the Work and shall remove from the Jobsite any CONTRACTOR personnel determined to be unfit or to be acting in violation of any provision of this Contract. CONTRACTOR is responsible for maintaining labor relations in such manner that there is harmony among workers and shall comply with and enforce Project and Jobsite procedures, regulations, work rules and work hours established by ENGINEER.

13.2 Professional Standards.
The Work will be performed in a professional and workmanlike manner in accordance with the standards imposed by Applicable Law and the practices and professional standards used in well managed operations performing work similar to the Work.

13.3 Discretion to Deny Access. ENGINEER may at his sole discretion deny access to the Jobsite to any individual by written notice to CONTRACTOR. In the event an employee is excluded from the Jobsite, CONTRACTOR shall promptly replace such individual with another who is fully competent and skilled to perform the Work.

13.4 Demands for Collective Bargaining. CONTRACTOR shall give ENGINEER prompt notice in writing of every demand for collective bargaining made upon CONTRACTOR or any of its subcontractors by any labor organization and of any labor dispute, which may reasonably be expected to affect performance of the Work under this Contract.

13.5 Jurisdictional Disputes. Unless other methods are established by ENGINEER, the rules, regulations, and procedures of the Plan for Settlement of Jurisdictional Disputes in the Construction Industry, or any successor agreement thereto, shall be used to determine work assignments and to resolve jurisdictional disputes on work covered by this Contract.

13.6 Wage Requirements for Construction Contracts. Unless otherwise required or if federally assisted, when a construction project exceeds the sum of Ten Thousand Dollars ($10,000.00), the prevailing wages paid shall correspond as nearly as practicable to the prevailing wages required in the federal Davis Bacon Act. Such scale of wages to be paid shall be posted by the Contractor in a prominent and easily accessible place at the site of work.

GC-14 ASSIGNMENTS AND SUBCONTRACTS

14.1 Consent of CITY Required. Any assignment of this Contract or rights hereunder, in whole or part, without the prior written consent of CITY shall be void, except that upon ten (10) calendar days written notice to CITY. CONTRACTOR may assign monies due, or to become due, under this Contract. Any assignment of monies shall be subject to proper set-offs in favor of CITY and to any deductions provided for in this Contract.

14.2 Pass Down of Contract Requirements. Purchase orders and subcontractors must include provisions to secure all rights and remedies of CITY provided under this Contract, and must impose upon the Subcontractor all of the duties and obligations required to fulfill this Contract with respect to their activities.

14.3 Subcontractors. If Consultant subcontracts any of the Services, Consultant shall: (i) be responsible for the performance of Services by the Subcontractors; (ii) remain City's sole point of contact for the Services; and (iii) be responsible for the payment of any Subcontractors.

14.4 Required Provisions. Purchase orders and Subcontractors must include provisions to secure all rights and remedies of CITY provided under this Contract, and must impose upon the Subcontractor all of the duties and obligations required to fulfill this Contract with respect to their activities.

14.5 Copies of Purchase Orders and Subcontracts. Copies of all purchase orders and Subcontracts are to be provided to ENGINEER upon request.

14.6 No Relief of Responsibilities. No assignment or subcontract will be approved which would relieve CONTRACTOR or its sureties, if any, of their responsibilities under this Contract. CITY may require revised or modified bonds or insurance and the execution of assumption agreements as conditions for approval.

14.7 Further Acts. CITY and CONTRACTOR each agrees to perform any additional acts, execute, and deliver any additional documents as may reasonably be necessary in order to carry out the provisions and effectuate the intent of this Contract.

GC-15 COMMERCIAL ACTIVITIES

Neither CONTRACTOR nor its employees shall establish any commercial activity or issue concessions or permits of any kind to third parties for establishing commercial activities on the Jobsite or any other lands owned or controlled by CITY.

GC-16 PUBLICITY AND ADVERTISING

CONTRACTOR shall not make any announcement, release any photographs, or release any information concerning this Contract, or the Project, or any part thereof to any member of the public, press, business entity, or any official body unless prior written consent is obtained from ENGINEER. CONTRACTOR may not erect any signs without the written approval of the ENGINEER, other than those required by this Contract.

GC-17 ENVIRONMENTAL REQUIREMENTS

17.1 Environmental Plan and Controls. Throughout performance of the Work, CONTRACTOR shall conduct all operations in such a way as to minimize impact upon the natural environment and prevent any spread of contaminated or hazardous materials. CONTRACTOR shall:

17.1.1 Provide dust control of its operations within work and all other areas under its control and shall coordinate and cooperate with others for dust control in common areas;

17.1.2 Provide working machinery and equipment with efficient noise suppression devices and all other noise and vibration abatement measures necessary for the protection of workers and the public;

17.1.3 Provide suitable waste, sewage, sanitary, and garbage disposal methods and procedures approved by ENGINEER and consistent with State and Federal regulations.

17.1.4 Provide suitable equipment, facilities, and precautions to prevent the discharge of contaminants into the atmosphere, adjoining workspaces, any body of water, or land areas;

17.1.5 Provide all documentation required by all levels of governing authority or this Contract concerning environmental requirements; and

17.1.6 Be responsible for developing and maintaining a written Environmental Compliance Plan in accordance with CONTRACTOR's established practices, including, but not limited to, compliance with all applicable laws and all applicable requirements in the Project Environmental Control Plan. CONTRACTOR shall have sole responsibility for developing, implementing, and enforcing its Environmental Compliance Plan and CONTRACTOR's obligations under the Clause titled "INDEMNITY' apply to any liability arising in connection with or incidental to CONTRACTOR's performance or failure to perform as provided in this clause.

17.1.7 Submit NPDES Permit for staging / batch plant as required.

17.2 Storm Water Discharge. All discharged storm water, associated with construction activities, to the waters of the State of Georgia shall be in accordance with the limitations, monitoring requirements and other conditions set forth in the provisions of the Georgia Water Quality Control Act (Georgia Laws 1964, p. 416 as amended). The Federal Clean Water Act (33 U.S.C. 1251 et seq., as amended) and the Rules and Regulations promulgated to these acts.

17.3 Notice of Toxic/Hazardous Materials. In the event CONTRACTOR encounters on the Jobsite material reasonably believed to be toxic or hazardous material or waste, which has not been addressed in this Contract, CONTRACTOR shall immediately stop work in the affected area and notify the ENGINEER or its designated representative in writing of the condition. Pending receipt of written instructions from ENGINEER, CONTRACTOR shall not resume work in the affected area.

GC-18 HAZARDOUS SUBSTANCE AWARENESS

18.1 Hazardous Nature of the Work. The nature of the Work to be performed under this Contract may involve inherent risks. CONTRACTOR agrees that it will inform its officers, employees, agents, suppliers and Subcontractors, and any other parties which may come into contact with any hazardous substance as a result of CONTRACTOR's activities hereunder of the nature of such materials and any health or environmental risks associated with such materials.

18.2 Training Prior to Assignment. CONTRACTOR warrants that CONTRACTOR's personnel and personnel of its suppliers and Subcontractors, assigned to or regularly entering the Jobsite, have or will receive training as specified in OSHA 29 CFR 1910.120(e) in relation to this Contract prior to their assignment to field duty. Supervisory personnel will also receive, as a minimum, eight (8) hours additional specialized training in the management of hazardous waste operations. Such training shall be at CONTRACTOR's expense. CONTRACTOR personnel assigned to the Jobsite may also be required to attend specialized training classes specific to the Jobsite as presented by CITY or its designated representatives.

GC-19 HAZARDOUS SUBSTANCE REGULATIONS

CONTRACTOR shall ensure that all hazardous substances with which it deals receive safe and proper handling. CONTRACTOR confirms that it is aware of and will comply with the requirements of the All Environmental Regulations, including but limited to, Comprehensive Environmental Response, Compensation, Liability Act, 42 U.S.C. 9601-9675 (CERCLA) as amended; the Resource Conservation and Recovery Act, 42 U.S.C. 6901-6992- (RCRA) as amended; the Toxic Substances Control Act (TSCA), 15 U.S.C. 2601-2671; the Clean Water Act (CWA), 33 U.S. C. 1251-1387; Title 40 of the Code of Federal Regulations; the Department of Transportation (DOT) regulations applicable to hazardous substances, and any other federal, state, and local laws applicable to work with or near hazardous substances.

GC-20 DECONTAMINATION OF EQUIPMENT AND MATERIALS

All CONTRACTOR equipment, debris and used or surplus materials must be fully decontaminated prior to removal from designated work areas. CONTRACTOR shall submit decontamination and contaminated material control procedures for ENGINEER review and acceptance. CONTRACTOR shall obtain ENGINEER's authorization to remove any such equipment, debris or surplus materials from the Jobsite.

GC-21 ON-SITE HANDLING AND DISPOSAL OF HAZARDOUS MATERIAL

If the Work under this Contract includes any intrusive site or structural drilling, boring, coring, or sampling, debris may be produced as a result of these efforts. This debris could include solids or liquids drawn from site wells for sampling purposes. All such debris shall be treated by the CONTRACTOR as if it were hazardous waste regulated under the Federal Resource and Conservation Recovery Act of 1976, 42 U.S.C. 6901-6992 (RCRA) as amended, or any more stringent applicable regulations, unless and until the CONTRACTOR has been able to confirm, to the satisfaction of ENGINEER and/or the appropriate regulatory agencies that the wastes are not regulated as hazardous.

GC-22 OFF-SITE TRANSPORTATION AND DISPOSAL OF HAZARDOUS MATERIAL

CONTRACTOR shall have no authority or responsibility for the off-site transportation, storage, treatment or disposal of contaminated or potentially waste materials of any kinds, which are directly or indirectly generated at the Jobsite. Such removal shall be made by the CITY. However, CONTRACTOR shall handle all materials at the Jobsite with due care, in accordance with work or Jobsite plans and the requirements of this Contract.

GC-23 SITE CONDITIONS AND NATURAL RESOURCES

23.1 Nature and Location of Work. CONTRACTOR shall have the sole responsibility for satisfying itself concerning the nature and location of the Work and the general and local conditions, including but not limited to the following:

23.1.1 Transportation, access, disposal, handling and storage of materials;

23.1.2 Availability and quality of labor, water, electric power, and road conditions;

23.1.3 Climatic conditions, tides, and seasons;

23.1.4 Physical conditions at the Jobsite and the project area as a whole;

23.1.5 Topography and ground surface conditions; and

23.1.6 Equipment and facilities needed preliminary to and during the performance of the Work.

23.2 Failure to Assess Conditions. The failure of CONTRACTOR to acquaint itself with any applicable conditions will not relieve CONTRACTOR of the responsibility for properly estimating either the difficulties, time, or cost of successfully performing CONTRACTOR's obligations under this Contract.

GC-24 DIFFERING SITE CONDITIONS

24.1 Information on Subsurface Conditions. Where CITY has made investigations of subsurface conditions in areas where work is to be performed under this Contract, such investigations are made by CITY for the purpose of study and design. If the records of such investigation are included in the Contract Documents, the interpretation of such records shall be the sole responsibility of CONTRACTOR. Neither CITY nor its agents, representatives and consultants assume any responsibility whatsoever in respect to the sufficiency or accuracy of such investigations, the records thereof, or of the interpretations set forth and there is no warranty or guarantee, either express or implied, that the conditions indicated by such investigations or records thereof are representative of those existing throughout such areas, or any part thereof, or that unforeseen developments may not occur, or that materials other than or in proportions different from those indicated may not be encountered.

24.2 Notice for Differing Site Conditions. CONTRACTOR shall immediately notify ENGINEER in writing before proceeding with any work which CONTRACTOR believes constitutes a differing site condition with respect to:

24.2.1 Subsurface or latent physical conditions at the Jobsite differing materially from those indicated in this Contract; or

24.2.2 Previously unknown physical conditions at the Jobsite, of an unusual nature, differing materially from those ordinarily encountered and generally recognized as inherent in work of the character provided for in this Contract.

24.3 Determination by ENGINEER. ENGINEER shall investigate such condition and make a written determination. If ENGINEER determines that such condition does constitute a differing site condition, CONTRACTOR may then, pursuant to the Clause titled "CHANGE DOCUMENTS", submit a written Change Notice Request setting forth the impact of such differing site condition and describing any additional or modified work resulting therefrom. Failure of CONTRACTOR to give the required notice shall be grounds for rejection of the claim to the extent CITY is prejudiced by such delay.

GC-25 TITLE TO MATERIALS FOUND

The title to water, soil, rock, gravel, sand, minerals, timber, and any other materials developed or obtained in the excavation or other operations of CONTRACTOR or any of its Subcontractors, and the right to use said materials, or dispose of same, is hereby expressly reserved by CITY. CONTRACTOR may, at the sole discretion of CITY, be permitted, without charge, to use in the Work any such materials, which meet the requirements of this Contract.

GC-26 SURVEY CONTROL POINTS AND LAYOUTS

26.1 Survey Control Points. Survey control points as shown on the drawings will be established by CITY. If CONTRACTOR or any of its Subcontractors or any of their representatives or employees move or destroy or render inaccurate any survey control point, such control point shall be replaced by ENGINEER at CONTRACTOR's expense.

26.2 Work to Confirm. CONTRACTOR shall complete the layout of all work and shall be responsible for execution of the Work in accordance with the locations, lines, and grades specified or shown on the drawings, subject to such modifications as ENGINEER may require as work progresses. Cross Sections, when required to establish quantities, shall be taken at a maximum of fifty (50) foot intervals.

26.3 Replacement Survey Control Points. If CONTRACTOR, or any of its Subcontractors or any of their representatives or employees, move or destroy or render inaccurate any survey control point, such control point shall be replaced by ENGINEER at CONTRACTOR's expense.

26.4 Certification of Survey Work. No separate payment will be made for survey work performed by CONTRACTOR, but all survey work shall be under the direction of registered Land Surveyor, licensed in Georgia, who shall certify all survey results.

GC-27 COOPERATION WITH OTHERS

27.1 Cooperation between CONTRACTORS. The CITY reserves the right to Contract for and perform other, or additional, work on or near the Work covered by this Contract. When separate contracts are let within the limits of any one project, each CONTRACTOR shall conduct its work so as not to interfere with, or hinder the progress of, completion of the Work being performed by other contactors. Contractors working on the same project shall cooperate with each other as directed.

Each contractor involved shall assume all liability, financial or otherwise, in connection with its Contract and shall protect and same harmless the CITY from any and all damages or claims that may arise because of inconvenience, delays, or loss experienced by CONTRACTOR because of the presence and operations of other contractors working within the limits of the same project.

The CONTRACTOR shall arrange its work and shall place and dispose of the materials being used so as not to interfere with the operations of the other CONTRACTORS within the limits of the same project. It shall join its work with that of the others in an acceptable manner and shall perform Work in proper sequence to that of the others.

GC-28 ILLUMINATION

When any work is performed at night, or where daylight is obscured, CONTRACTOR shall, at its expense, provide artificial light sufficient to permit work to be carried on efficiently, satisfactorily and safely, and to permit thorough inspection. During such time periods, the access to the place of work shall also be clearly illuminated. All wiring for electric light and power shall be installed and maintained in a safe manner and meet all applicable codes and standards.

GC-29 USE OF COMPLETED PORTIONS OF WORK

29.1 Beneficial Occupancy. Whenever, as determined by Engineer, any portion of the Work performed by CONTRACTOR is suitable for use, CITY may, upon written notice, occupy and use such portion. Use shall not constitute acceptance, relieve CONTRACTOR of its responsibilities, or act as a waiver by the CITY of any terms of this Contract (see "WARRANTY").

29.2 Liability for Damage. CONTRACTOR shall not be liable for normal wear and tear or for repair of damage caused by any misuse during such occupancy or use by CITY. If such use increases the cost or time of performance of remaining portions of the Work, CONTRACTOR shall, pursuant to the Clause titled, "CHANGE DOCUMENTS", be entitled to an equitable adjustment in its compensation or schedule. Damage caused by CONTRACTOR's acts or omissions during such use shall be remedied at CONTRACTOR's expense.

29.3 Use of Unsatisfactory Work. If, as a result of CONTRACTOR's failure to comply with the provisions of this Contract, such use of completed portions of the Work proves to be unsatisfactory to CITY, the CITY shall have the right to continue such use until such portion of the Work can be taken out of service at the CITY's discretion for correction of defects, errors, omissions, or replacement; provided that the period of operations or use pending remedial action shall not exceed twelve (12) months.

29.4 Use of Permanently Installed Equipment. CONTRACTOR shall not use any permanently installed equipment unless such use is approved in writing by ENGINEER. When such use is approved, CONTRACTOR shall at its own expense properly use and maintain and, upon completion of such use, recondition such equipment as required, normal wear and tear as expected.

GC-30 USE OF CITY OR ITS DESIGNATED REPRESENTATIVES CONSTRUCTION EQUIPMENT OR FACILITIES

30.1 Owner Furnished Materials. None

30.2 When CONTRACTOR requests and ENGINEER agrees to make available for rent any equipment or facilities belonging to CITY for the performance of work, the following shall apply:

30.2.1 ENGINEER will furnish a copy of the equipment maintenance and inspection record, and these records shall be maintained by CONTRACTOR during the rental period;

30.2.2 CONTRACTOR shall assure itself of the condition of such equipment and/or materials and assume all risks and responsibilities during its use;

30.2.3 ENGINEER and CONTRACTOR shall jointly prepare an Inspection Report and inspect such equipment and/or materials before its use and upon its return, to document properly any damages as a result of CONTRACTOR's use. The cost of all necessary Improvements or replacement other than normal wear shall be at CONTRACTOR's expense; and

30.2.4 If such equipment and/or materials is furnished with an operator, the services of such operator will be performed under the complete direction and control of CONTRACTOR and such operator shall be considered CONTRACTOR's employee for all purposes other than the payment of wages, Workers' Compensation Insurance or other benefits.

30.2.5 Equipment rental rates shall be those shown in Exhibit "C" (Quantities, Pricing and Data) or, if none are shown, rates shall be negotiated based upon then current Data Quest Blue Book data."

GC-31 INSPECTION AND QUALITY ASSURANCE

31.1 Inspection and Audit. All material and equipment furnished and work performed shall be properly inspected by CONTRACTOR at its expense, and shall at all times be subject to quality surveillance and quality audit by the CITY who, upon reasonable notice, shall be afforded full and free access to the shops, factories, or other places of business of CONTRACTOR and its subcontractors for such quality surveillance or audit.

31.2 Authority and Access for Inspectors. Such quality auditors or inspectors are not authorized to change, revoke, or waive any provision of this Contract, not to issue instructions contrary to Contract requirements, nor to direct the efforts of any of CONTRACTOR's employees in any way. CONTRACTOR shall provide safe and adequate facilities, drawings, documents, and samples as requested, and shall provide assistance and cooperation including stoppage of work to perform such examination as may be necessary to determine compliance with the requirements of this Contract. Any work covered prior to any planned quality surveillance or test by the CITY shall be uncovered and replaced at the expense of CONTRACTOR if such covering interferes with or obstructs such inspection or test.

31.3 Uncovering of portions of the Work. At any time before Final Acceptance, ENGINEER may, for the purpose of inspection, direct CONTRACTOR to uncover portions of the Work which have been completed and covered up. If examination proves the completed work to be defective, corrections shall be made pursuant to the Clause titled "WARRANTY". If the Work is not defective, the impact of uncovering and restoration shall be treated as a change pursuant to the Clause titled "CHANGE DOCUMENTS".

31.4 Defective Work. If any work is determined by the CITY to be defective or not in conformance with this Contract, the provisions of the Clause titled "WARRANTY" shall apply.

31.5 Samples. CONTRACTOR shall furnish samples as requested and shall provide reasonable assistance and cooperation necessary to permit tests to be performed on materials or work in place including reasonable stoppage of work during testing. Any material or assembly that does not conform to the requirements of the Contract Documents shall be considered unacceptable and shall be rejected. The CONTRACTOR shall remove any rejected material or assembly from the site of the Work, unless otherwise instructed by the ENGINEER.

No rejected material or assembly, the defects of which have been corrected by the CONTRACTOR, shall be returned to the site of the Work until such time as the ENGINEER has approved its use in the Work.

31.6 Quality Assurance. The CONTRACTOR is advised that the cost of failing tests requiring additional tests to confirm compliance will be deducted from the monies due to CONTRACTOR through the Progress Payment Process.

GC-32 MONITORING

The equipment and materials furnished and work performed under this Contract shall be subject to monitoring by ENGINEER or his representatives who shall be afforded full and free access to the ships, factories, and other places of business of CONTRACTOR and its Subcontractors for monitoring purposes. As required by ENGINEER, CONTRACTOR shall provide detailed schedules and progress reports for use in monitoring and shall cooperate with ENGINEER in monitoring activities.

GC-33 BACKCHARGES

33.1 Corrective Actions by CITY or its Designated Representatives. If, under the provisions of this Contract, CONTRACTOR is notified by ENGINEER to correct defective or nonconforming work, and CONTRACTOR states, or by its actions indicates that it is unable or unwilling to proceed with corrective action in a reasonable time, ENGINEER may, upon written notice, proceed to accomplish the redesign, repair, rework or replacement of nonconforming work by the most expeditious means available and backcharge CONTRACTOR for the costs incurred. Furthermore, if ENGINEER agrees to or is required to perform work for CONTRACTOR, such as cleanup, off-loading or completion of incomplete work, ENGINEER may, upon written notice, perform such work by the most expeditious means available and backcharge CONTRACTOR for the costs incurred.

33.2 Backcharge Costs. The cost of backcharge work shall include:

33.2.1 Incurred labor costs including all payroll additives;

33.2.2 Incurred net delivered material costs;

33.2.3 Incurred Subcontractor costs directly related to performing the corrective action;

33.2.4 Equipment and tool rentals at prevailing rates in the Jobsite area; and

33.2.5 A factor of thirty-five percent (35%) applied to the total of Items 33.2.1 through 33.2.5 for overhead, supervision, and administrative costs.

33.3 CONTRACTOR's Concurrence. The backcharge notice will request CONTRACTOR's concurrence for ENGINEER to proceed with the required work. However, failure of CONTRACTOR to grant such concurrence shall not impair CITY's right to proceed with work under this or any other provision of this Contract.

33.4 Backcharge not a Release. ENGINEER shall separately invoice or deduct from payments otherwise due to CONTRACTOR the costs as provided herein. CITY's right to backcharge is in addition to any and all other rights and remedies provided in this Contract or by law. The performance of backcharge work by ENGINEER shall not relieve CONTRACTOR of any of its responsibilities under this Contract including, but not limited to, express or implied warranties, specified standards for quality, contractual liabilities and indemnifications, and meeting the Contract Milestones of the Clause titled "COMMENCEMENT, PROGRESS, AND COMPLETION OF THE WORK".

GC-34 SUSPENSION

34.1 Suspension Notice. CITY may, by written notice to CONTRACTOR, suspend at any time the performance of all, or any portion of, work to be performed under this Contract. Upon receipt of such notice, CONTRACTOR shall, unless the notice requires otherwise;

34.1.1 Immediately discontinue work on the date and to the extent specified in the notice;

34.1.2 Place no further orders or subcontracts for material, services, or facilities with respect to suspended work other than to the extent required in the notice;

34.1.3 Promptly make every reasonable effort to obtain suspension upon terms satisfactory to CITY of all orders, subcontracts, and rental agreements to the extent they relate to performance of suspended work;

34.1.4 Continue to protect and maintain the Work including those portions on which work has been suspended; and

34.1.5 Take any other reasonable steps to minimize costs associated with such suspensions.

34.2 Notice to Resume. Upon receipt of notice to resume suspended work, CONTRACTOR shall immediately resume performance under this Contract to the extent required in the notice.

34.3 Equitable Adjustment. CONTRACTOR shall be entitled to an equitable adjustment for suspensions pursuant to the Clause titled "CHANGE DOCUMENTS", provided that within ten (10) days after receipt of notice to resume work, CONTRACTOR submits a Proposed Change Document, and provided that the suspension was not made necessary by the defective performance of work or any other Contract obligation of CONTRACTOR. No adjustment or relief

of schedule milestones or completion dates shall be made for suspensions caused by CONTRACTOR.

GC-35 TERMINATION FOR DEFAULT

35.1 Reasons for Default. Notwithstanding any other provisions of this Contract, CONTRACTOR shall be considered in default of its contractual obligations under this Contract if it:

35.1.1 Performs work which fails to conform to the technical requirements of this Contract;

35.1.2 Fails to make progress so as to endanger performance of this Contract;

35.1.3 Abandons or refuses to proceed with any of the Work, including modifications directed pursuant to the Clause titled "CHANGE DOCUMENTS";

35.1.4 Fails to fulfill or comply with any of the terms of this Contract;

35.1.5 Engages in behavior that is dishonest, fraudulent or constitutes a conflict of interest with CONTRACTOR's obligations under this Contract; or,

35.1.6 Reasonable grounds for insecurity arise with respect to CONTRACTOR's performance.

35.2 Notice of Default. Upon the occurrence of any of the foregoing, ENGINEER shall notify CONTRACTOR in writing of the nature of the failure and of CITY's intention to terminate this Contract for default. If CONTRACTOR does not cure such failure within seven (7) calendar days from receipt of notification, or sooner, if safety to persons is involved, or fails to provide satisfactory evidence that such default will be corrected within a reasonable time, the CITY, by written notice to CONTRACTOR and without notice to CONTRACTOR's sureties, if any, shall terminate in whole or in part CONTRACTOR's right to proceed with the Work and CITY may prosecute the Work to completion in a timely manner by another contract or by any other reasonable method deemed expedient. CITY may take possession of and utilize any data, designs, licenses, equipment, materials, plant, tools, and property of any kind furnished by CONTRACTOR and necessary to complete the Work.

35.2A Immediate Termination. This Contract will immediately terminate, without the requirement of any action on CITY's part, and all termination for default remedies available and applicable termination actions required by CONTRACTOR when all work is terminated under this Contract shall apply, if CONTRACTOR:

35.2A.1 Voluntarily consents to an order for relief by filing a petition under the laws of the United States codified as Title 11 of the United States Code;

35.2A.2 Seeks consent to, or does not, contest the appointment of a receiver, custodian, or trustee for itself or for all or any part of its property;

35.2A.3 Files a petition seeking relief under the bankruptcy, arrangement, reorganization, or other debtor relief laws of any state or other competent jurisdiction;

35.2A.4 Admits in writing that it is generally not paying its debts as those debts become due;

35.2A.5 Gives notice to any governmental body of insolvency or pending insolvency or suspends operations;

35.2A.6 Becomes insolvent as that term is defined under applicable fraudulent transfer or conveyance laws; or

35.2A.7 Makes an assignment for the benefit of creditors or takes any other similar action for the protection or benefit of creditors.

35.3 Excess Reprocurement Costs. CONTRACTOR and its sureties, if any, shall be liable for all costs in excess of this Contract price for such terminated work reasonably and necessarily incurred in the completion of the Work, including cost of administration of any Contract awarded to others for completion.

35.4 Termination Actions. Upon termination for default, CONTRACTOR shall:

35.4.1 Immediately discontinue work on the date and to the extent specified in the notice and place no further purchase orders or subcontracts to the extent that they relate to the performance of the terminated work;

35.4.2 Inventory, maintain and turn over to CITY all data, designs, licenses, equipment, materials, plant, tools, and property furnished by CONTRACTOR, or provided by CITY for performance of the terminated work;

35.4.3 Promptly obtain cancellation upon terms satisfactory to CITY of all purchase orders, subcontracts, rentals, or any other agreements existing for performance of the terminated work or assign those agreements as directed by CITY;

35.4.4 Cooperate with the CITY in the transfer of data, designs, licenses and information and disposition of work in progress so as to mitigate damages;

35.4.5 Comply with other reasonable requests from CITY regarding the terminated work and;

35.4.6 Continue to perform in accordance with all of the terms and conditions of this Contract such portion of the Work that is not terminated.

35.5 CONTRACTOR not in Default. If, after termination pursuant to this Clause, it is determined for any reason that CONTRACTOR was not in default, the rights and obligations of the parties shall be the same as if the Notice of Termination had been issued pursuant to the Clause titled "TERMINATION FOR CONVENIENCE."

GC-36 TERMINATION FOR CONVENIENCE

36.1 Termination Actions. CITY may terminate for convenience any of the Work under this Contract in whole or, from time to time, at any time by written notice to CONTRACTOR. Such notice shall specify the extent to which the performance of the Work is terminated and the effective date of such termination. Upon receipt of such notice, CONTRACTOR shall:

36.1.1 Immediately discontinue the Work on the date and to the extent specified in the notice and place no further purchase orders or subcontracts for materials, services, or facilities, other than as may be required for completion of such portion of the Work that is not terminated.

36.1.2 Promptly obtain assignment or cancellation upon terms satisfactory to CITY of all purchase orders, subcontracts, rentals, or any other agreements existing for the performance of the terminated work or assign those agreements as directed by CITY;

36.1.3 Assist ENGINEER in the maintenance, protection, and disposition of work in progress, plant, tools, equipment, property, and materials acquired by CONTRACTOR or furnished by CITY under this Contract and;

36.1.4 Complete performance of such portion of the Work which is not terminated in accordance with the scheduled milestones and Contract completion dates.

36.2 Waiver and Compensation. In the event of termination, CONTRACTOR waives any claims for damages including loss of anticipated profits. As CONTRACTOR's sole right and remedy, CITY shall pay in accordance with the following:

36.2.1 The Contract price corresponding to the Work performed in accordance with this Contract prior to such notice of termination;

36.2.2 All reasonable costs for work thereafter performed as specified in such notice;

36.2.3 Reasonable administrative costs of settling and paying claims arising out of the termination of work under purchase orders or subcontracts;

36.2.4 Reasonable costs incurred in demobilization and the disposition of residual material, plant, and equipment and;

36.2.5 A reasonable overhead and profit on items 36.2.2 and 36.2.4 of this clause.

36.3 Proposal for Compensation. CONTRACTOR shall submit within thirty (30) calendar days after receipt of notice of termination, a written statement setting forth its proposal for an adjustment to the Contract price to include only the categories of incurred costs described in this clause. CITY shall review, analyze, and verify such proposal, negotiate an appropriate adjustment, and modify this Contract by Change Order accordingly.

GC-37 CHANGE DOCUMENTS

37.1 This section will govern changes to the Contract issued under the Contract, whether such changes involve an increase in the Total Contract Price or not. Changes in Contract or other aspects of this Contract shall be made by written document ("Change Document" or "Unilateral Change Document").[1] All changes shall be implemented pursuant to this subsection and any Applicable Law.

37.2 Potential Change Documents that may be issued concerning this Contract include, but are not limited to:

37.2.1 Change Documents to the Contract involving an increase to the Total Contract Price executed between CITY and CONTRACTOR which may, or may not, require legislative approval under Code Section 2-1292; and

37.2.2 Change Documents that do not involve an increase in the Total Contract Price will be executed pursuant to Code Section 2-1292(d) either bilaterally or unilaterally by the CITY; and

37.2.3 Unilateral Change Documents to the Contract issued by CITY pursuant to Code Section 2-1292(d) involving no increase to the Total Contract Price and changes in the value of the changes, or changes in the terms of amounts of compensation under the Total Contract Price; and

37.2.4 Change Documents to the Contract involving no increase to the Total Contract Price, changes in the value of the Charges or changes in the terms or amounts of compensation under the Total Contract Price executed between CITY and CONTRACTOR pursuant to Code Section 2-1292(d).

37.3 CITY may propose a change in the Contract or other aspects of this Contract by delivering written notice to CONTRACTOR describing the requested change ("Change Request"). Within ten (10) days of receipt of CITY's Change Request, CONTRACTOR shall evaluate it and submit a written response ("Proposed Change Document"). A Change Request which involves the reduction of Services shall be effective upon written notice to Contractor.

37.4 CONTRACTOR may, without receiving any Change Request, on its own submit a Proposed Change Document describing its own proposed requested change to the Contract.

37.5 Each Proposed Change Document shall include the applicable schedule for implementing the proposed change, any applicable changes to the Charges (either increased or decreased) and all other information applicable to the proposed change. Each Proposed Change Document shall constitute an offer by CONTRACTOR and shall be irrevocable for a period of sixty (60) days. CITY shall review and may provide CONTRACTOR with comments regarding a Proposed Change Document, and CONTRACTOR shall respond to such comments, if any. A Proposed Change Document from CONTRACTOR will become effective only when executed by an authorized representative of CITY.

---

[1] Change Documents may assume numerous multiple forms and titles depending on the nature of the change involved (e.g. Change Order, Unilateral Change Order, Amendment, Contract Modification, Renewal, etc.)

37.6 CITY may propose any changes to the Contract, including, but not limited to, changes that it contends do not involve an increase to the Maximum Payment Amount, and CONTRACTOR shall, in good faith evaluate such proposed Change Request. If CITY and CONTRACTOR are able to reach agreement on such Change Request, each will execute a Change Document concerning such Change Request pursuant to Code Section 2-1292(d). Nothing in this Contract shall, in the event of disagreement between CITY and CNTRACTOR concerning a proposed Change Request, or otherwise, prohibit CITY from issuing a Unilateral Change Document to CONTRACTOR, pursuant to Code Section 2-1292(d), and CITY and CONTRACTOR agree to resolve their dispute pursuant to the Dispute Resolution Procedures set forth in the "DISPUTES" Clause. During the pendency of such Dispute, CONTRACTOR shall continue to perform the Services, as changed by such Unilateral Change Document.

37.7 Submittals Substantiating Adjustments.

37.7.1 CONTRACTOR shall supply certified pricing within thirty (30) days after providing written notice of intent to claim time or money. CONTRACTOR's pricing shall remain firm for a period of not less than sixty (60) days after delivery of the certified pricing. Any delay in the submission of all necessary supporting documentation or the determination of pricing will not justify or constitute a basis for an increase in the Total Contract Price, Purchase Order Amount, or Contract Completion.

37.7.2 CONTRACTOR shall certify in writing that the amounts included in the Proposed Change Document cover will direct, supplemental, indirect, consequential, serial, and cumulative costs and requested time extension, as applicable, and that those costs and the additional time would be or were necessarily incurred, despite the CONTRACTOR's reasonable and diligent efforts to mitigate them.

37.7.3 No submittal for an adjustment in the Total Contract Price, Purchase Order Amount, or Contract Completion shall be valid unless submitted in accordance with this Clause.

37.7.4 For each submittal, CONTRACTOR shall execute a certificate of current costs or pricing data. The certificate shall contain the wording in Clause:

37.7.4.1 This certificate shall be supplied at the time CONTRACTOR submits pricing information for any and all Proposed Change Documents.

37.7.4.2 The certificate of current costs or pricing data shall contain the following statement: "This is to certify that, to the best of my knowledge and belief, the costs or pricing data submitted, either actually or by specific identification in writing, to ENGINEER or any of his authorized representatives, in support of [identify the request for price adjustment, giving the appropriate reference any date] are accurate, complete and current as of [insert the day, month, and year when submittal was provided to ENGINEER].

CONTRACTOR: [type name]
By: [type name]
Title:
Date of Execution: [insert the day, month, and year of signing, which should be the same date as when the pricing information is submitted],

37.7.4.3 If any price, including profit or fee, negotiated under this Clause, or any cost reimbursement under this Contract was increased by any amount because CONTRACTOR furnished costs or pricing data that were not complete, accurate, and current as certified in its certificate of current costs or pricing data, the price or costs shall be reduced accordingly, and this Contract shall be modified to reflect the deduction. CONTRACTOR is also placed on notice that, to the extent any submittal is determined to be a false claim based on any state or federal law, CONTRACTOR will be liable to the CITY for all remedies permitted by applicable statutes.

37.8 Failure to Agree. Failure by ENGINEER and CONTRACTOR to agree on any adjustment pursuant to this Clause shall be considered a Dispute, subject to the procession under the "DISPUTES" Clause of the Contract.

37.9 Emergency Cases. In addition to the CITY's ability to initiate changes through a Change Notice, in the event of an emergency that poses imminent threat to life or property, ENGINEER may use oral orders to CONTRACTOR for any work required by reason of such emergency. CONTRACTOR shall commence and complete such emergency work as directed by ENGINEER. Such orders will be confirmed by an appropriate Change Document. Any Change Document resulting from an emergency will be processed pursuant to this Clause.

37.10 Other Modifications. All other modifications to this Contract shall be by written amendment signed by both parties.

GC-38 PRICING OF ADJUSTMENTS

38.1 Pricing Methods. When costs are a factor in any determination of a Contract adjustment pursuant to the Clause titled "CHANGE DOCUMENTS", CONTRACTOR shall propose upward or downward price adjustments in one of the following methods as directed by ENGINEER:

38.1.1 Using Unit Prices from this Contract;

38.1.2 Estimating new Unit Prices where appropriate, subject to negotiation;

38.1.3 Estimating a lump sum price for the change, subject to negotiation; or

38.1.4 Establishing separate cost accounting records, subject to daily end-of-the-day written approval by ENGINEER of all allocable costs, on a Force Account basis.

Reimbursement of reasonable and approved incurred costs, plus specified rates for overhead and profit, as defined below, shall be the basis for Force Account adjustment of the Contract price.

38.2 Cost Breakdown Information. When CONTRACTOR is directed to propose price adjustments pursuant to 38.1.2 or 38.1.3 above, it shall provide cost breakdown information for the purpose of, and in sufficient detail to permit, analysis and negotiation including but not limited to, labor categories, job hours and rates, equipment and material quantities, sources and calculations, overhead costs and allocations, profit computations Subcontractor quotes, and reference data upon which estimates are based.

38.3 Markups.

38.3.1 If the pricing method is in accordance with 38.1.1 above, CONTRACTOR is not authorized any additional markup's as the Contract Unit Prices are considered fully burdened;

38.3.2 For work priced pursuant to 38.1.2 or 38.1.3 above, the additional markup shall be negotiated with the CONTRACTOR based on the complexity and type of work required; however, markup's on "Direct Labor" costs shall not exceed fifteen percent (15%) if the pricing adjustment is valued at less than Twenty Five Thousand ($25,000.00) Dollars; or will pay no more than Ten Percent (10%) markup on "Direct Labor" if the price adjustment is valued at greater than Twenty Five Thousand One ($25,001.00) Dollars.

38.3.3 If, for any reason, ENGINEER and CONTRACTOR are unable to agree upon a new unit rate or lump sum Contract price, adjustment provisions 38.4 through 38.8 establish and define allowable costs and rates for Force account work pursuant to 38.1.4 above.

38.4 Direct Labor. Incurred direct labor wages for technical, craft, and manual labor for all classifications through lead ENGINEER, foreman or equivalent are allowable for the period of performance of the change. General supervision and management above lead ENGINEER, foreman or equivalent and indirect labor, e.g. surveyors, office personnel, timekeepers and maintenance personnel, are not allowable as direct costs but are recovered in the overhead and profit rates established by this Clause. Payroll additives are allowable and include taxes, insurance premiums, paid absences, and social and retirement benefits required by law, labor agreements, published company policies applying uniformly to CONTRACTOR's work force or which are normal and customary. CITY shall have access to CONTRACTOR's certified payroll records for verification of labor costs.

38.5 Equipment. Approved incurred construction equipment, facilities and vehicle net rental costs plus five percent (5%) for CONTRACTOR overhead and profit are allowable, except tools and equipment having original purchase prices of less than Five Hundred Dollars ($500.00) each, which are deemed to be covered in the overhead and profit rates established by this clause. If operating costs are not included in rental rates, they are also allowable.

38.5.1 Equipment Charges. Reasonable equipment charges for approved CONTRACTOR- owned construction equipment having original purchase prices of more

than Five Hundred Dollars ($500.00) each shall also be allowed provided such charges are:

38.5.1.1 Agreed upon Contract unit rates; or

38.5.1.2 Based upon calculated values allocating ownership costs over the useful life of the equipment plus operating costs such as fuel, oil, lubricants, and maintenance, and a profit of ten percent (10%) on such costs; or

38.5.1.3 Not greater than seventy percent (70%) of Data Quest Blue Book daily rental rates applicable for the period of performance of the change; and

38.5.1.4 Appropriately discounted to stand-by rates for idle time reasonably required.

38.5.2 Limited Equipment Charges. When the operated use of equipment is infrequent and, as determined by ENGINEER, such equipment need not remain at the Work site continuously, charges shall be limited to actual hours of use. Equipment not operating but retained at the location of changes at ENGINEER's direction shall be charged at the standby rate.

38.5.3 Need for Equipment. For the cost of both rented and owned equipment to be allowable, ENGINEER must agree in writing, prior to their being used, that the individual pieces of equipment are needed, are appropriate for the Work, and that the mobilization and demobilization costs are allocable to the change and acceptable. This is in addition to the daily end-of-day approval of operating time for such equipment.

38.6 Materials. Approved incurred costs for material incorporated into the changed Work or required for temporary construction facilities made necessary by the change shall be allowable at net cost delivered to the Jobsite plus five percent (5%) overhead and profit for CONTRACTOR.

38.7 Subcontracts. Approved incurred costs for subcontracted tasks shall be allowable plus five percent (5%) overhead and profit for CONTRACTOR; provided that ENGINEER has approved the subcontract pursuant to the Clause on Titled "ASSIGNMENTS AND SUBCONTRACTS" before any work is performed.

38.8 Overhead, Project, and all other Costs. In addition to the overhead and profit provided in 38.4 through 38.7 above, CITY may also pay an additional markup on direct labor which will be deemed to be full consideration for all overhead, interest and profit, for all additional costs e.g. supervision and tools, and for all impacts of the change on all elements of the Work whether or not changed. The additional markup shall be equal to fifteen percent (15%) of total direct labor as described in 39.4 above for changes resulting in a Contract price adjustment, excluding this percentage markup, of less than Twenty Five Thousand ($25,000.00) Dollars; or will pay ten percent (10%) for changes resulting in adjustments of Twenty Five Thousand One ($25,001.00) Dollars or more.

GC-39 EXCUSABLE DELAYS

39.1 Force Majeure. Force Majeure shall mean:

39.1.1 Strikes, labor disputes, work stoppages, or picketing (legal or illegal);

39.1.2 Adverse weather conditions not reasonably foreseeable or unusually severe weather;

39.1.3 Acts of God, including, without limitation, floods, hurricanes, tornadoes, high winds, sinkholes, landslides, earthquakes, epidemics, quarantine and pestilence;

39.1.4 Fires or other casualties;

39.1.5 Freight embargoes;

39.1.6 Governmental actions, restrictions or moratoria;

39.1.7 Acts of a public enemy, civil commotion, riots, insurrections, acts of war, blockades, terrorism, effects of nuclear radiation or national or international calamities;

39.1.8 Sabotage or vandalism;

39.1.9 Condemnation or other exercise of the power of eminent domain

39.1.10 The passage or enactment of, or the interpretation of, any governmental requirement, and the orders of any governmental authority having jurisdiction over CONTRACTOR or the Work;

39.1.11 Delays in any approval process of any governmental authority to the extent such delays are not due to any fault, negligence, or lack of diligence of CONTRACTOR or its agents, employees, contractors, subcontractors, or consultants;

39.1.12 Actions of CITY (and its agents, employees or other representatives) not permitted by the Contract or by law;

39.1.13 Inconvenience, delays, inefficiencies or loss experienced by CONTRACTOR caused by the presence and operations of other CITY CONTRACTORS working within the limits of the Project; and

39.1.14 Restraint or other act by court or public authority to the extent such delays are not due to any fault, negligence, or lack of diligence of CONTRACTOR or its agents, employees, contractors, subcontractors, or consultants.

39.2 Force Majeure shall in any event exclude:

39.2.1 Lack of sufficient funds or any other financial difficulty of CONTRACTOR, and

39.2.2 Adverse weather

39.2.2.1 Occurring during non-work periods or on any day which is not a business day, unless CONTRACTOR can demonstrate that said weather impeded the Work the following day; or

39.2.2.2 Which shall not result in a direct and actual delay in CONTRACTOR's performance of Work at the time of such inclement weather.

39.3 Extensions for Force Majeure. If CONTRACTOR is delayed at any time in the commencement or progress of the Work by reason of Force Majeure or by other causes which CITY in its discretion may determine justifies an extension of the time for substantial completion or final completion, then the time for substantial completion or final completion shall be extended by Change Order for such reasonable time as CITY may determine that the Project's completion, or the achievement of any Contract milestones, is delayed by the Force Majeure, but only:

39.3.1 If and to the extent such event or circumstance is beyond the reasonable control of CONTRACTOR;

39.3.2 If and to the extent CONTRACTOR shall have taken all reasonable precautions to prevent delays by reason of such event or circumstance if such event or circumstance was actually shown in advance to CONTRACTOR,

39.3.3 If and to the extent such event or circumstance is not caused by CONTRACTOR's or CONTRACTOR's agents', materialmens', Subcontractor's, or employees' fault or negligence,

39.3.4 If and to the extent CONTRACTOR shall have taken all reasonable precautions to mitigate the delays owing to such event or circumstance,

39.3.5 If and to the extent that such event caused a delay to activities on the critical path of the Contract schedule, and

39.3.6 If CONTRACTOR strictly complied with the requirements of GC-39.3

39.4 Notice of Force Majeure. If CONTRACTOR is prevented or delayed by reason of Force Majeure, CONTRACTOR shall, within twenty-four (24) hours after the commencement of the Force Majeure, provide to ENGINEER written notice of the Force Majeure and shall, within seven (7) days after the Force Majeure event has ended, provide to ENGINEER a written description of the impact caused on the performance of the Work by the Force Majeure. The description of the impact for weather related Force Majeure events shall include U.S. Weather Bureau Climatological Reports for the months involved plus a report indicating the average precipitation, temperature, or other relevant impacting weather event for the past ten years from the nearest reporting station. The ten-year average will determine the number of adverse weather days that CONTRACTOR should normally expect to encounter.

39.5 Sole Remedy for Force Majeure. For delays in the construction of the Project caused by reason of Force Majeure, an extension in the time for Contract completion shall be CONTRACTOR's sole and exclusive remedy for any such delay. In no event shall CONTRACTOR be entitled to any increase in the Total Contract Price or any other additional compensation for costs resulting by reason of Force Majeure.

GC-40 COMPLETION AND ACCEPTANCE

40.1 Notice of Completion. When CONTRACTOR considers the Work or any independent portion of the Work under this Contract, to be complete and ready for acceptance, or when ENGINEER notifies CONTRACTOR in writing that some portion of the work is ready for Beneficial Occupancy, CONTRACTOR shall notify ENGINEER in writing that such Work is materially complete and ready for inspection. ENGINEER or his designated representatives, with CONTRACTOR's cooperation, will conduct such reviews, inspections and tests as may be reasonably required to satisfy ENGINEER that the Work, or identified portion of the Work, conforms to all requirements of this Contract. If all, or any part, of the Work covered by CONTRACTOR's notice does not confirm to Contract requirements, ENGINEER shall notify CONTRACTOR of such nonconformance and CONTRACTOR shall take corrective action in accordance with the Clause titled "WARRANTY" and shall have the nonconforming work re-inspected until all Contract requirements are satisfied."

40.2 Notice of Substantial Completion. The ENGINEER will issue a Certificate of Substantial Completion if the Work is deemed to be substantially complete. The CONTRACTOR will ascertain when the Work, or designated portions thereof, is ready for the ENGINEER's Substantial Completion inspection. CONTRACTOR will provide required regulatory or permit authority acceptance documentation for the ENGINEER's review at inspection.

40.3 Notice of Final Acceptance. ENGINEER shall issue a written Notice of Final Acceptance of the Work as a whole when satisfactorily inspected. ENGINEER's written Notice of Final Acceptance of the Work as a whole under this Contract shall be conclusive except with regard to latent defects, fraud, or such gross mistakes as amount to fraud, or with regard to CITY's rights under the Clause titled "WARRANTY".

GC-41 WARRANTY AND COMPONENT WARRANTIES

41.1 Warranty Standards. CONTRACTOR warrants to CITY that equipment and materials furnished under this Contract shall be new, or clear title and of the most suitable grade of their respective kinds for their intended uses, unless otherwise specified. All workmanship shall be first-class and performed in accordance with sound construction practices acceptable to ENGINEER. All equipment, materials, and workmanship shall conform to the requirements of the Contract documents.

41.2 Warranty Period. CONTRACTOR warrants all equipment and material it furnishes, and all work it performs against defects in CONTRACTOR's design/build, equipment, materials, or workmanship for a period from commencement of work to a date twenty-four (24) months after

Beneficial Occupancy provided that all of requirements of this section have been met, unless more stringent requirements are otherwise specified elsewhere in the Contract documents. CONTRACTOR shall provide an additional thirty-six (36) month warranty on all chillers, pumps, starters, compressors, ventilation systems, fire detection systems, fire suppression equipment, emergency power, and communication equipment. A minimum of one (1) year labor warranty is required for all equipment/system replacement and repairs.

41.3 Warranty Guidelines.

41.3.1 Warranty should include manufacturers' and CONTRACTOR's name, telephone, contact, address, start, and end date of warranty.

41.3.2 All sections shall be tabbed and labeled.

41.3.3 A minimum of five (5) hard and two (2) electronic copies shall be furnished.

41.4 Discovery of Defects. If, at any time during the warranty period, the CITY or CONTRACTOR discovers any defect in the design/build, equipment, materials, or workmanship, immediate notice shall be given to the other parties. CONTRACTOR shall, within a reasonable time, propose corrective actions to cure such defects to meet the requirements of this Contract.

41.5 Remedies for Defects. ENGINEER, at his sole discretion, may direct CONTRACTOR in writing and CONTRACTOR agrees to:

41.5.1 Rework, repair or remove and replace defective equipment and materials or re-perform defective workmanship to acceptable quality at a time and in a manner acceptable to ENGINEER;

41.5.2 Cooperate with others assigned by ENGINEER to correct such defects and pay to ENGINEER al actual costs reasonably incurred by ENGINEER in performing or in having performed corrective actions; or

41.5.3 Propose and negotiate in good faith an equitable reduction in the Contract price in lieu of corrective action. This clause is applicable only for discovery of defects prior to the acceptance of the Project.

41.6 Incidental Cost. All costs incidental to corrective actions including demotion for access, removal, disassembly, transportation, reinstallation, reconstruction, retesting, and re-inspection as may be necessary to correct the defect and to demonstrate that the previously defective work conforms to the requirements of this Contract shall be borne by CONTRACTOR.

41.7 Extended Warranty. CONTRACTOR further warrants any and all corrective actions it performs against defects in design/build, equipment, materials, and workmanship for an additional warranty period of twelve (12) months as an extension to the original specified warranty period following acceptance by ENGINEER of the corrected work.

41.8 Operations and Maintenance (O&M) Data/Manuals. Prior to the commissioning of any equipment or section of the work, submit five (5) hard and two (2) electronic copies of operation and maintenance data/manuals that are specifically applicable to this Contract and a complete and concise description of the provided equipment or product. Data containing extraneous information to be sorted through to find applicable instructions will not be accepted. Present information in sufficient detail to clearly explain O & M requirements of the system, equipment, component, and subassembly level. Include an index preceding each submittal.

Information Required in O & M Data/Manuals, as applicable:

1) Environmental Conditions Operating Instructions
2) Safety Precautions
3) Operator Pre-start
4) Startup, Shutdown, and Post Shutdown Procedures
5) Normal Operations
6) Emergency Operations
7) Operator Service Requirements
8) Installation Details
9) Preventive Maintenance Instructions, Plans, and Schedule
10) Lubrication Data
11) Corrective Maintenance Instructions
12) Troubleshooting Guides and Diagnostic Techniques
13) Wiring Diagrams and Control Diagrams Including Sequence of Operations
14) Maintenance and Repair Procedures
15) Removal and Replacement Instructions
16) Spare Parts and Supply Lists Including Cost
17) Parts Identification
18) Personnel Training Requirements
19) Testing Equipment and Special Tool Information

41.9 Binding and Delivery. The manuals shall be bound or otherwise securely enclosed in oil and moisture resistant binders and sections shall be tabbed. Each binder cover shall indicate bold type, the manufacturer's name, Contract number, model number, and serial number of the unit or equipment. Five (5) hard and two (2) electronic copies of the manuals shall be delivered with the shop drawings and must be approved with the shop drawings. Also included, shall be CONTRACTOR's name, address, telephone number and contact.

41.9 Training. Include in the applicable specification sections the following requirements:

41.9.1 The CONTRACTOR shall include in the base Contract, all costs required to train the OWNER's operation and maintenance personnel in the use and maintenance of the specific systems.

41.9.2 Training sessions shall be conducted by instructors certified or approved in writing by the manufacturer of the specific system or equipment.

41.9.3 Sessions shall be conducted for not less than four-hour periods during normal working hours, i.e., Monday through Friday, 8:00 a.m. to 5:00 p.m. Training session

schedules shall inform to the requirements of the OWNER; therefore, such schedules shall be submitted to the OWNER for approval not less than two weeks prior to the training session. Training sessions for different systems shall not be scheduled concurrently. All training sessions shall be digitally videotaped – two copies shall be delivered to the OWNER> At the OWNER's discretion, provisions shall be made to allow up to six (6) OWNER's personnel to participate in final system check of all systems.

41.9.4 All Operations and Maintenance Manuals shall be approved and issued prior to training.

41.9.5 All training shall be completed prior to final acceptance of equipment, systems, etc.

GC-42 DISPUTES

42.1 Claims, Counterclaims, Disputes:

42.1.1 All claims, counterclaims, disputes, and any other matters in question arising under, or relating to, the Contract Documents, or the breach thereof, shall be processed in accordance with the provisions of this Clause and are subject to audit by the CITY.

42.1.2 A "Claim" means a written demand or assertion by the CONTRACTOR seeking an adjustment in the Contract Price and payment of monies so due, an extension or shortening in Contract Completion, the adjustment or interpretation of Contract terms, or other relief arising under or relating to the Contract following denial of a submittal for Change Notice Request under "CHANGE DOCUMENTS". A written demand or assertion by the CONTRACTOR seeking the payment of money or an extension of time is not a Claim under this Clause until certified as required below. A voucher, invoice, or other routine request for payment that is not in dispute when submitted is not a Claim under this Clause.

42.1.3 A Claim arising under the Contract, unlike a Claim relating to the Contract, is a Claim that can be resolved under a Contract provision that provides for, or excludes, the relief sought by the Claimant. A Claim arising under the Contract shall be resolved under the applicable provisions of the Contract. A Claim relating to the Contract must meet all requirements of this provision and any request for an increase in the Contract Price or an extension to the time for Contract Completion shall be calculated pursuant to and limited by the provisions of this Contract.

42.1.4 CONTRACTOR shall not be entitled to any damages or an adjustment in the Contract Price, and neither CITY nor its designated representatives shall be liable to CONTRACTOR or its Subcontractors in tort (including negligence) or Contract, except as specifically provided in this Contract.

42.2 When Notice and Claim Submittal Become Due:

42.2.1 For any Claim under this Clause to be valid, it shall be based upon written notice delivered by the CONTRACTOR to the ENGINEER promptly, but in no event later than seven (7) days, after the occurrence of the event giving rise to the Claim and stating the general nature of the Claim. The Claim submittal with all supporting cost data and CPM schedule analysis shall be delivered by the CONTRACTOR to the ENGINEER within sixty (60) days after that occurrence (unless the ENGINEER allows an additional period of time to ascertain more accurate data in support of the Claim). The responsibility to substantiate a Claim shall rest with the party making the Claim.

42.2.2 A Claim by the CONTRACTOR shall be made in writing and submitted to the ENGINEER within the timeframe required by GC 42.2.1 for a written decision.

42.3 Requirements for contractor Claims:

42.3.1 For all CONTRACTOR Claims seeking an increase in the Contract Price or time for Contract Completion, the CONTRACTOR shall submit with the Claim an affidavit certifying that:

42.3.1.1 The Claim is made in good faith, and the amount claimed accurately reflects the adjustments in the Contract Price or time for Contract Completion for which the CONTRACTOR can prove the CITY is liable, and covers all direct, supplemental, indirect, consequential, serial, and cumulative costs and delays to which the CONTRACTOR is entitled as a result of the occurrence of the claimed event;

42.3.1.2 Supporting cost and pricing data are current, accurate, complete, and represent the best of the CONTRACTOR's knowledge and belief; and

42.3.1.3 If the CONTRACTOR is an individual, the affidavit shall be executed by that individual; if the CONTRACTOR is not an individual, the affidavit shall be executed by a senior company official in charge at the CONTRACTOR's plant or location involved, or a responsible officer or general partner of the CONTRACTOR.

42.3.2 The attention of the CONTRACTOR is drawn to state and federal laws regarding penalties for false claims. The CITY will prosecute the CONTRACTOR to the fullest extent of the law for the submission of a false, fictitious, or unsubstantiated Claim.

42.3.3 A Claim for an adjustment of the time for Contract Completion shall be supported by an analysis of the Progress Schedule detailing the impact of the event giving rise to the Claim.

42.3.4 Any costs or expenses for consultants, experts, or legal representation that the CONTRACTOR elects to engage to investigate, prepare, and substantiate any claim related to any dispute shall be born solely by the CONTRACTOR.

42.4 Determination on a Claim. For CONTRACTOR-certified claims of $50,000.00 or less, the ENGINEER will, if requested in writing by the CONTRACTOR, render a determination within sixty (60) days of the request. For CONTRACTOR-certified claims over $50,000.00, the ENGINEER will, within sixty (60) days tender a determination of the Claim or notify the CONTRACTOR of the date by which the determination will be made. If CONTRACTOR and ENGINEER cannot resolve any claim or dispute, CONTRACTOR agrees to participate in good faith in non-binding Mediation if requested by the ENGINEER. The cost of Mediation will be split equally between CONTRACTOR and ENGINEER. If a resolution cannot be reached through mediation, the CONTRACTOR's sole appeal of the ENGINEER's Final Determination is to institute legal action in Fulton Superior Court within sixty (60) days after Final Completion of the Work.

42.5 Dispute Defined.

42.5.1 Any Claim that is denied by the ENGINEER shall be considered a Dispute within the meaning of this Clause.

42.5.2 Pending final resolution of any Claim or Dispute, including litigation, the CONTRACTOR shall proceed diligently with performance of the Work, and comply with any decision of the CITY or the ENGINEER.

42.5.3 In the event the CITY is a prevailing party in any litigation brought under, or to enforce the provisions of this Contract, CONTRACTOR shall pay to CITY all its costs, expenses and fees associated with the litigation and the preparation thereof, including, but not limited to, reasonable attorneys' fees, expert witness fees, and all expenses incurred. CONTRACTOR shall pay CITY's reasonable attorneys' fees and other costs whether the services are performed by CITY's employees or independent counsel.

42.6 Failure to Provide Notice is a Waiver. The CITY must receive notice in strict compliance with the Contract of all Claims and Disputes in order to investigate such Claims and Disputes and to make decisions that will eliminate or minimize any additional costs or delays to the Work, the Project or to the CITY's overall expansion program. CONTRACTOR acknowledges that it has no right in law or equity to seek any increase to the Contract Price or an extension to the time for Contract Completion or any milestone(s), unless CONTRACTOR strictly complies with all requirements of this Clause. Failure by CONTRACTOR to meet all of the requirements of this Clause shall be deemed an intentional waiver by CONTRACTOR of any right to file a lawsuit seeking redress of any type. Compliance with all the requirements of this Clause is a strict condition precedent to CONTRACTOR having the right to file a lawsuit seeking redress of any type. The CITY is entitled to have any lawsuit dismissed with prejudice by showing that CONTRACTOR did not strictly comply with all of the requirements of this Clause.

42.7 Venue. CONTRACTOR acknowledges and agrees that the exclusive jurisdiction and venue for any legal action or proceeding, at law or in equity, arising out of or relating to this Contract shall be the Superior Court for Fulton County, Georgia. CONTRACTOR waives all objections it may have as to venue in the Fulton County Superior Court. CONTRACTOR also consents to the Fulton County Superior Court's jurisdiction for any such action or proceeding, regardless of CONTRACTOR's residence or domicile.

GC-43 MUTUAL WAIVER OF CONSEQUENTIAL DAMAGES

43.1 CONTRACTOR and OWNER expressly waive claims against each other for consequential damages arising out of, or relating to, this Contract. This mutual waiver includes:

43.1.1 Damages incurred by the OWNER for rental expenses, for losses of use, income, profit, financing, business and reputation, and for loss of management or employee productivity, or of the services of such persons; and

42.1.2 Damages incurred by the CONTRACTOR for principal office expenses including the compensation of the personnel stationed there, for losses of financing, business and reputation, and for loss of profit except anticipated profit arising directly from the Work. This mutual waiver is applicable, without limitation, to all consequential damages due to either party's termination. Provided, however, nothing in this Contract shall be deemed to preclude an award of liquidated damages, when applicable, in accordance with the requirements of the Contract documents.

GC-44 RECORDS AND AUDITS

CONTRACTOR shall maintain records and accounts in connection with the performance of this Contract that will accurately document incurred costs, both direct and indirect, including, but not limited to, labor hours and costs, equipment hours and costs, Subcontractor costs, material costs, and other costs of whatever nature, by cost code, including budgeted amounts, for a period of three (3) years from the expiration of CONTRACTOR's Contract unless otherwise specified by applicable law. As used in this agreement, "records" includes books, documents, accounting procedures and practices, and other data, regardless of type and regardless of whether such items are in written form, in the form of computer data, or in any other form.

CITY, or its designated representatives, shall have the right to examine and copy all such records, including weekly and monthly summary reports of the entire project, labor cost reports, and equipment cost reports, at all reasonable times, with advance notification. CONTRACTOR may also be required to provide an electronic "data dump" of each transaction posted to each cost code, labor hours and costs, and equipment hours and costs, and other transactions. Such data shall be in the format of an electronic spreadsheet or database, and not in "PDF" or other image formats.

44.1 **City of Atlanta (COA) Audit.** As used in this agreement, "records" includes book, documents, accounting procedures and practices, and other data, regardless of type and regardless of whether such items are in written form, in the form of computer data, or in any other form.

44.2 Whenever the OWNER enters into any type of contractual arrangement including, but not limited to, lump sum contracts (i.e. fixed priced or stipulated sum contracts), unit price, cost plus or time and material contracts with or without a guaranteed maximum (or not-to-exceed amounts), CONTRACTOR's and Subcontractors' "records" shall, upon reasonable notice, be open to inspection and subject to audit and/or reproduction during normal business working hours. Such audits may be performed by an OWNER's representative or an outside representative engaged by OWNER. The OWNER, or its designee, may conduct such audits or inspections

throughout the term of this contract and for a period of three years after final payment or longer if required by law. OWNER's representatives may (without limitation) conduct verifications such as counting employees at the Construction Site, witnessing the distribution of payroll, verifying information and amounts through interviews and written confirmations with CONTRACTOR employees, field and agency labor, Subcontractors, and vendors.

44.3 CONTRACTOR's "records", as referred to in this contract, shall include any and all information, materials, and data of every kind and character, including without limitation, records, books, papers, documents, subscriptions, recordings, agreements, purchase orders, leases, contracts, commitments, arrangements, notes, daily diaries, superintendent reports, drawings receipts, vouchers and memoranda, and any and all other agreements, sources of information and matters that may in OWNER's judgment have any bearing on, or pertain to, any matters, rights, duties or obligations under or covered by any Contract Document. Such records shall include (hard copy, as well as computer readable data if it can be made available), written policies and procedures; time sheets; payroll registers; payroll records; cancelled payroll checks; subcontract files (including proposals of successful and unsuccessful bidders, bid recaps, negotiation notes, etc.); original bid estimates; estimating work sheets; correspondence; change order files (including documentation covering negotiated settlements); backcharge logs and supporting documentation; invoices and related payments documentation; general ledger, information detailing cash and trade discounts earned, insurance rebates and dividends; and any other CONTRACTOR records which may have a bearing on matters of interest to the OWNER in conjunction with the CONTRACTOR's dealings with the OWNER (all foregoing hereinafter referred to as "records") to the extent necessary to adequately permit evaluation and verification of any or all of the following:

44.3.1 Compliance with contract requirements for deliverables

44.3.2 Compliance with approved plans and specifications

44.3.3 Compliance with OWNER's business ethics expectations

44.3.4 Compliance with Contract provisions regarding the pricing of change orders

44.3.5 Accuracy of CONTRACTOR representations regarding the pricing of invoices

44.3.6 Accuracy of CONTRACTOR representations related to claims submitted by the CONTRACTOR or any of his payees.

44.4 CONTRACTOR shall require all payees (examples of payees include Subcontractors, material suppliers, insurance carriers, etc.) to comply with the provisions of this article by including the requirements hereof in a written contract agreement between CONTRACTOR and payee. CONTRACTOR will ensure that all payees (including those entering into lump sum contracts) have the same right to audit provisions contained in this contract.

44.5 OWNER's authorized preventative or designee shall have reasonable access to the C ONTRACTOR's facilities, shall be allowed to interview all current or former employee's to discuss matters pertinent to the performance of this Contract and shall be provided adequate and appropriate work space in order to conduct audits in compliance with this article.

44.6 If an audit, inspection, or examination, in accordance with this article, discloses overpricing or overcharges, of any nature, by the CONTRACTOR to the OWNER in excess of one percent (1%) of the total Contract billed to date, in addition to making adjustments for the overcharges, all reasonable cost of the OWNER's audit shall be reimbursed to the OWNER by the CONTRACTOR. Any adjustments and/or payments, which must be made as a result of any such audit or inspection of the CONTRACTOR's invoices and/or records, shall be made within a reasonable amount of time, not to exceed 90 days, from presentation of OWNER's findings to CONTRACTOR.

GC-45 INDEMNITY

45.1 Hold Harmless Agreement. In addition to its agreement to obtain and maintain the insurance as set forth herein, CONTRACTOR shall defend, indemnify and hold harmless the CITY, its officers, agents and employees, from and against any and all suits, actions, legal, or administrative proceedings, claims, damages, demands, liabilities, interest, attorney's fees, costs, and expenses of whatsoever kind or nature, including without limitation, those arising out of injury to, or death of, CONTRACTOR's employees, officers, agents or any subconsultant/Subcontractors' officers, agents or employees, whether arising before or after the completion of work, which allegedly arises out of any act or omission of the CONTRACTOR or any subconsultant/Subcontractor employed by the CONTRACTOR or any of the CONTRACTORS' and/or subconsultants'/Subcontractors' officers, agents or employees, whether active or passive. This defense, indemnification, and hold harmless agreement shall also apply to any and all claims which result from any condition created or maintained by the CONTRACTOR or any Subcontractor employed by CONTRACTOR, or any of the CONTRACTORS' and/or Subcontractors' officers, agents or employees, of which condition was not specified to be created or maintained by this Contract. The CONTRATOR further agrees that its agreement to defend, indemnify and hold harmless the CITY, its officers, agents and employees shall not be limited to the limits of the liability insurance under this Contract and the attached specifications. However, CONTRACTOR shall not be required to indemnify the CITY, its officers, agents, and employees for any claims resulting from the sole negligence or willful misconduct of the CITY, or any other party released, indemnified, or held harmless pursuant to this Contract. This paragraph shall survive any termination or expiration of this Contract.

45.2 Negligence and Waiver. CONTRACTOR's aforesaid release, indemnity and hold harmless obligations, or portions or applications thereof, shall apply even in the event of the fault or negligence, whether active or passive, or strict liability of the parties released, indemnified or held harmless to the fullest extent permitted by law, but in no event shall they apply to liability caused by the willful misconduct or sole negligence of the party released, indemnity by an industrial insurance or workers' compensation statute. CONTRACTOR further agrees that this Contract to indemnify and hold harmless the parties released shall not be limited to the limits or terms of the liability insurance, if any required under this Contract and/or otherwise maintained by the CONTRATOR. This indemnity provision shall survive any termination or expiration of this Contract.

GC-46 PATENT AND INTELLECTUAL PROPERTY INDEMNITY

46.1 Indemnification and Substitution. CONTRACTOR hereby indemnifies and shall defend and hold harmless CITY, and its officers, agents, employees and its authorized representatives from and against any and all claims, actions, losses, damages, and expenses, including attorneys' fees, arising from any claim, whether rightful or otherwise, that any concept, product, design, equipment, material, process, copyrighted material or confidential information, or any part thereof, furnished by CONTRACTOR under this Contract constitutes an infringement of any patent or copyrighted material or a theft of trade secrets. If use of any part of such conept, product, design, equipment, material, process, copyrighted material or confidential information is limited or prohibited, CONTRACTOR shall, at its sole expense, procure the necessary licenses to use the infringing or a modified but non-infringing concept, product, design, equipment, material, process, copyrighted material or confidential information or, with CITY's prior written approval, replace it with substantially equal but non-infringing concepts, products, designs, equipment, materials, processes, copyrighted material or confidential information; provided however,

46.1.1 That any such substituted or modified concepts, products, designs, equipment, material, processes, copyrighted material or confidential information shall meet all the requirements and be subject to all the provisions of this Contract; and

46.1.2 That such replacement or modification shall not modify or relieve CONTRACTOR of its obligations under this Contract.

46.2 Exclusion if Furnished. The foregoing obligation shall not apply to any concept, product, design, equipment, material, process, copyrighted material or confidential information the detailed design of which (excluding rating and/or performance specifications) has been furnished in writing by the CITY to CONTRACTOR.

GC-47 NON-WAIVER

Failure by CITY or its designated representatives to insist upon strict performance of any terms or conditions of this Contract; failure to delay to exercise any rights or remedies provided herein or by law; failure to properly notify CONTRACTOR in the event of breach; the acceptance of, or payment for, any goods or services hereunder; the review or failure to review designs shall not release CONTRACTOR from any of the warranties or obligations of this Contract and shall not be deemed a waiver of any right of CITY to insist upon strict performance hereof.

GC-48 ARCHAEOLOGICAL AND HISTORICAL FINDINGS

48.1 No Known Significance. To the best of the knowledge of CITY, the Jobsite is not within any property, district, or site, and does not contain any building, structure or object listed in the current National Register of Historic Places published by the United States Department of Interior.

48.2 Stop Work. Should the CONTRACTOR encounter, during its operations, any building, part of a building, structure, or object, which is incongruous with its surroundings, which might be considered to be of archaeological or historical interest, CONTRACTOR shall immediately cease operations in that location and notify the ENGINEER in writing. The ENGINEER will

investigate and will direct the CONTRACTOR either to resume its operations or to suspend operations in accordance with the Clause titled "SUSPENSION OF WORK".

GC-49 EXPLOSIVES

49.1 Transport of Explosives. Explosives shall be transported to the Jobsite only when required to perform the Work under this Contract and with prior notice to, and written approval of, CITY. CONTRACTOR shall be responsible for properly purchasing, transporting, storing, safeguarding, handling and using explosives required to perform the Work under this Contract. CONTRACTOR shall employ competent and qualified personnel for the use of explosives and, notwithstanding any other provision in this Contract to the contrary, shall assume full responsibilities for the cost of any incidental or consequential damages caused by the improper use of explosives. Residual surplus explosives shall be promptly removed from the Jobsite and properly disposed of by CONTRACTOR.

49.2 Notice of Detonation. CONTRACTOR shall notify ENGINEER in writing no less than forty-eight (48) hours in advance of each intended detonation of explosives. CONTRACTOR shall submit a comprehensive blasting plan for each intended use of explosives to ENGINEER for approval. The plan shall describe drilling plans and patterns, types and amounts of explosives, and methods. Safety and storage considerations shall also be included.

GC-50 DRUGS, ALCOHOL, AND WEAPONS

50.1 Policy. CONTRACTOR's personnel shall not bring onto the Jobsite, or any other location where the provisions of this Contract apply:

50.1.1 Any firearm of whatsoever nature, knife with a blade exceeding four (4) inches (100 millimeters) in length or any other object which in the sole judgment of ENGINEER is determined to be a potential weapon.

50.1.2 Alcoholic beverages of any nature.

50.1.3 Illegal or CITY prohibited non-prescription drugs of any nature without exception.

50.2 Violations. CONTRACTOR shall abide by and enforce the requirements of this Clause to include the immediate removal from the Work under this Contract, of any employee who has violated the requirements of this Clause or who ENGINEER, in his sole judgment, determines has violated the requirements of this Clause.

GC-51 ESCROW DOCUMENTS

51.1 Generally. The Escrow Bid Documents constitute all documents generated by CONTRACTOR (or its subcontractors, if applicable) in preparation of its Bid for this project. CONTRACTOR was required to submit one complete set of its Escrow Bid Documents to the CITY to be held in the CITY's secured vault located within the Department of Procurement ("escrow"). Such Escrow Bid Documents shall remain in escrow for the duration of the Contract. Nothing in

the Escrow Bid Documents shall change or modify the terms or conditions of the Contract Documents.

If the CONTRACTOR subcontracts any part of the Work, the Escrow Bid Documents must include the documents of each subcontractor whose total subcontract price exceeds five percent (5%) or Five Hundred Thousand ($500,000) Dollars, whichever is less, of the total Contract price. Such documents must be filed in the same manner and at the same time as the CONTRACTOR's Escrow Bid Documents and shall remain in escrow for the duration of the Contract. CITY retains the right to require the CONTRACTOR to submit Escrow Bid Documents from any other subcontractor.

An Escrow Bid Documents Certificate ("Certificate") must accompany the Escrow Bid Documents at the time they are placed in escrow. The Certificate must be signed by an individual authorized by the CONTRACTOR to execute the bid proposal who must represent and warrant (1) that the material in the Escrow Bid Documents constitutes all the documents used in preparation of the Bid, (2) that he or she has personally examined the contents of the Escrow Bid Documents container, (3) that the documents in the container are accurate and complete, and (4) that no other Bid preparation information shall be considered in resolving disputes.

51.2 Format and Contents. CONTRACTOR may submit Escrow Bid Documents in their usual cost-estimating format. The Escrow Bid Documents shall be in English.

The Escrow Bid Documents must clearly itemize the estimated costs of performing the Work of each Bid item contained in the Bid schedule. Bid items should be separated into sub-items as required to present a complete and detailed cost estimate and allow a detailed cost review. The Escrow Bid Documents shall include all quantity takeoffs, crew, equipment, calculations of rates of production and progress, copies of quotations from subcontractors and suppliers, and memoranda, narratives, consultant's reports, add/deduct sheets, and all other information used by the CONTRACTOR to arrive at the prices contained in its Bid. Estimated costs should be broken down into the CONTRACTOR's usual estimate categories such as direct labor, repair labor, equipment operation, equipment ownership, expendable materials, permanent materials, and subcontract cost as appropriate. Plant and equipment and indirect costs should be detailed in the CONTRACTOR's usual format. The CONTRACTOR's allocation of plant and equipment, indirect costs, contingencies, markup and other items to each Bid item shall be included.
All costs shall be identified. For Bid items amounting to less than Ten Thousand ($10,000) Dollars, estimated unit costs are acceptable without a detailed cost estimate, provided that labor, equipment, materials, and subcontracts, as applicable, are included and provided that indirect costs, contingencies, and markup, as applicable, are allocated.

Bid Documents provided by the CITY should not be included in the Escrow Bid Documents unless needed to comply with the requirements of this specification.

51.3 Purpose. Escrow Bid Documents will be used to assist in the negotiation of price adjustments, change orders, settlement of disputes, claims and litigation against the CITY related to the Contract. They will not be used for pre-award evaluation of the CONTRACTOR's anticipated methods of construction or to assess the CONTRACTOR's qualifications for performing the Work.

51.4 Examination. The Escrow Bid Documents shall be examined by the CITY and the CONTRACTOR (or designated representative) at any time deemed necessary by the CITY or the CONTRACTOR, to assist in the negotiation of price adjustments and change orders, or the settlement of disputes, claims and litigation related to this Contract.

Examination of the Escrow Bid Documents is subject to the following conditions:

51.4.1 The Escrow Bid Documents are proprietary and confidential regarding any "trade secrets." (See Confidentiality and Georgia Open Records Act section below.)

51.4.2 The CITY and CONTRACTOR may each designate one or more representatives in writing which shall be provided to the other party at least ten (10) days prior to any scheduled examination. Such representatives may be authorized to examine the Escrow Bid Documents on behalf of their respective principal. No other person shall have access to the Escrow Bid Documents.

51.5 Ownership. The Escrow Bid Documents are and shall remain the property of the CONTRACTOR, subject only to joint review by the CITY and the CONTRACTOR, as provided herein.

51.6 Confidentiality and Georgia Open Records Act. The CITY acknowledges that the Escrow Bid Documents may contain information that the CONTRACTOR, or its Subcontractor(s), considers "trade secret," as that term is defined in O.C.G.A. § 10-1-761. Information provided to the City is subject to disclosure under the Georgia Open Records Act. Pursuant to O.C.G.A. § 50-18-72(a)(34), "[a]n entity submitting records containing trade secrets that wishes to keep such records confidential under this paragraph shall submit and attach to the records an affidavit affirmatively declaring that specific information in the records constitute trade secrets pursuant to Article 27 of Chapter 1 of Title 10 [O.C.G.A. § 10-1-760 et seq.]."

51.7 Final Disposition. The Escrow Bid Documents will be returned to the CONTRACTOR at such time as the Contract has been completed and final settlement has been achieved.

GC-52 MISCELLANEOUS

52.1 Severability. In the event that any provision of this Agreement is declared invalid, unenforceable or unlawful, such provisions shall be deemed omitted and shall not affect the validity of other provisions of this Agreement.

52.2 Further Assurances. Each Party shall provide such further documents or instruments required by the other Party as may be reasonably necessary to give effect to this Agreement.

52.3 No Drafting Presumption. No resumption of any Applicable Law relating to the interpretation of contracts against the drafter shall apply to this Agreement.

52.4 Survival. Any provision of this Agreement which contemplates performance subsequent to any termination or expiration of this Agreement or which must survive in order to give effect to its meaning, shall survive the expiration or termination of this Agreement.

52.5 Third Party Beneficiaries. This Agreement is not intended, expressly, or implicitly, to confer on any other Person any rights, benefits, remedies, obligations or liabilities.

52.6 Cumulative Remedies. Except as otherwise provided herein, all rights and remedies under this Agreement are cumulative and are in addition to, and not in lieu of, any other remedies available under Applicable Law, in equity or otherwise.

52.7 Entire Agreement. The Contract Documents contain the entire Agreement of the Parties relating to their subject matter and supersede all previous communications, representations or agreements, oral or written, between the Parties with respect to such subject matter. This Agreement may only be amended or modified by a writing executed by each Party's authorized representative and each such writing shall be deemed to incorporate the Contract Documents, except to the extent that CITY is authorized under Applicable Law to issue Unilateral Change Documents. SERVICE PROVIDER MAY NOT UNILATERALLY AMEND OR MODIFY THIS AGREEMENT BY INCLUDING PROVISIONS IN ITS INVOICES, OR OTHER BUSINESS FORMS, WHICH SHALL BE DEEMED OBJECTED TO BY CITY AND OF NO FORCE OR EFFECT.

52.8 Unauthorized Goods or Services. CONTRACTOR acknowledges that this Agreement and any changes to it by amendment, modification, change order, or other similar document may have required, or may require, the legislative authorization of the CITY's Council and approval of the Mayor. Under Georgia law, Service Provider is deemed to possess knowledge concerning the CITY's ability to assume contractual obligations and the consequences of Service Provider's provision of goods or services to the CITY under an unauthorized contract, amendment, modification, change order or other similar document, including the possibility that the Service Provider may be precluded from recovering payment for such unauthorized goods or services. Accordingly, Service Provider agrees that if it provides goods or services to the CITY under a contract that has not received proper legislative authorization, or if Service Provider provides goods or services to the CITY in excess of the any contractually authorized goods or services, as required by the CITY's Charter and Code, the CITY may withhold payment for any unauthorized goods or services provided by Service Provider. Service Provider assumes all risk of non-payment for the provision of any unauthorized goods or services to the CITY, and it waives all claims to payment or to other remedies for the provision of any unauthorized goods or services to the CITY, however characterized, including, without limitation, all remedies at law or equity.

EXHIBIT B

SPECIAL CONDITIONS

HARTSFIELD-JACKSON ATLANTA INTERNATIONAL AIRPORT
EXHIBIT "B" CONSTRUCTION CONTRACT SPECIAL CONDITIONS

PROJECT NUMBER FC-8071; EXPLOSIVE DETECTION SYSTEM (EDS) RECAPITALIZATION AND OPTIMIZATION – DOMESTIC NORTH TERMINAL

Table of Contents

SC-01 DEFINITIONS 2
SC-02 COMMENCEMENT, PROGRESS AND COMPLETION OF THE WORK 4
SC-03 LIQUIDATED DAMAGES 5
SC-04 CONTRACT ADMINISTRATION 6
SC-05 CITY FURNISHED DRAWINGS AND SPECIFICATIONS 6
SC-06 CITY FURNISHED FACILITIES, MATERIALS 7
SC-07 CONTRACTOR FURNISHED DRAWING, DATA, AND SAMPLES 7
SC-08 KEY PERSONNEL 12
SC-09 ESSENTIAL SUBCONTRACTORS 12
SC-10 ADDRESSES 13
SC-11 MEASUREMENT FOR PAYMENT 14
SC-12 INVOICING AND PAYMENT 15
SC-13 WAGE REQUIREMENTS 18
SC-14 PROJECT CONTINGENCY / ALLOWANCES 18
SC-15 TEMPORARY ACCESS AND HAUL ROADS 19
SC-16 CONTRACTORS' WORK AREA 19
SC-17 CLEANING UP 22
SC-18 COORDINATION AND WORK ON AIRPORT PROPERTY 22
SC-19 PROTECTION OF AIRPORT OPERATIONS SYSTEMS 23
SC-20 DELAY FOR OPERATIONS 23
SC-21 CUTTING AND PATCHING 24

SC-01 DEFINITIONS

AASHTO means The American Association of State Highway and Transportation Officials, the successor association to AASHO.

Access Road means the right-of-way; the roadway and all improvements constructed thereon connecting the airport to a public highway.

AIP means Airport Improvement Program, a grant-in-aid program, administered by the Federal Aviation Administration.

Air Operations Area (AOA) means for the purpose of these specifications, the term Air Operations Area shall mean an area of the airport used or intended to be used for the landing, takeoff, or surface maneuvering of aircraft. An Air Operation Area shall include such paved or unpaved areas that are used or intended to be used for the unobstructed movement of aircraft in addition to its associated runway, taxiway, or apron.

Airside means the area of the Airport consisting of the airfield, aircraft parking ramps and other areas requiring a special Airport Security Identification badge to gain legal access. The general public does not have access to this area.

ASTM means The American Society for Testing and Materials.

Central Passenger Terminal Complex (CPTC) means the facilities at the Airport consisting of the North Terminal, South Terminal, Terminal Atrium, Concourses T, A, B, C, D, E, and F, and Airfield (active Runways and Taxiways).

Contract Line Item means a discretely priced portion of Work identified in the Exhibit titled "QUANTITIES, PRICING AND DATA FORMS."

Contract Schedule means the Work execution schedule developed and approved pursuant to the Exhibit titled "SCHEDULE REQUIREMENTS."

Drainage System means the system of pipes, ditches, and structures by which surface or subsurface waters are collected and conducted through the airport area.

H-JDP means Hartsfield-Jackson Development Program – H-JAIA development plan that includes major efficiencies/capacity projects associated with the Master Plan and replacement/upgrade/maintenance projects associated with the existing facility.

Landside means all areas outside the Airside, but still located on the Airport.

Large Hub Airport means an airport that enplanes more than one percent of the nation's passengers annually.

Lighting means a system of fixtures providing or controlling the light sources used on or near the Airport or within the Airport buildings. The field lighting includes all luminous signals, markers, floodlights, and

illuminating devices used on or near the Airport or to aid in the operation of aircraft landing at, taking off from, or taxiing on the Airport surface.

MARTA means Metropolitan Atlanta Rapid Transit Authority.

Pavement means the combined surface course, base course, and sub base course, if any, considered as a single unit.

PROPONENT means the legal entity proposing, its/their respective directors, officers, partners, joint venture, employees, agents, representatives, permitted assigns and successors, presented to the CITY for approval to perform specific work in accordance with the Scope of Work defined in this Request for Proposal.

Secured Area means the area located within the SIDA surrounding the terminal or concourses primarily used for parking / servicing aircraft.

SIDA means the Security Identification Display Area.

Sterile Area means the area located within the terminal and concourses that require passage through a TSA checkpoint to access.

Structures means Airport facilities such as bridges; culverts; catch basins; inlets, retaining walls, cribbing; storm and sanitary sewer lines; water lines; underdrains; electrical ducts, manholes, handholes, lighting fixtures and bases, transformers, flexible and rigid pavements, navigational aids, buildings, vaults, and other manmade features of the Airport that may be encountered in the work and not otherwise classified herein.

Subgrade means the soil which forms the pavement foundation.

Taxiway means for the purpose of this document, the portion of the air operations area of an Airport that has been designated by Airport for movement of aircraft to and from the Airport's runways or aircraft parking areas.

TSA means the Transportation Security Administration.

Utility Contracting means undertaking to construct, erect, alter, or repair or have constructed, erected, altered, or repaired any utility system in which the cost of the utility system work exceeds one hundred thousand dollars ($100,000.00).

Utility Contractor means a sole proprietorship, partnership, or corporation, which is engaged in utility contracting under express or implied contract or which bids for, offers to perform, purport to have the capacity to perform or does perform utility contracting under express or implied contract.

Utility Foreman means any individual who is employed by a licensed CONTRACTOR to have oversight and charge of the construction, erection, alteration, or repair of utility systems.

Utility Manager means any individual who is employed by a utility CONTRACTOR to have oversight and charge of the construction, erection, alteration, or repair of utility systems.

SC-02 COMMENCEMENT, PROGRESS AND COMPLETION OF THE WORK

2.1 Commencement. CONTRACTOR shall commence Work according to the accepted schedule following written Notice to Proceed from CITY, but in no event later than ten (10) business days thereafter. To facilitate the start of construction as early as possible, CONTRACTOR is strongly encouraged to submit its Safety, Security, Environmental, Quality Control, Fire Prevention plans, and the FAA Safety Plan Compliance Document (SPCD) to the CITY for review and approval immediately after Award of the Contract by the Council of the City of Atlanta. CONTRACTOR acknowledges that construction cannot begin until the Safety, Security and Quality Control plans are approved and that the development and submittal of CONTRACTOR submittals prior to the Contract being fully executed and Notice to Proceed issued is at CONTRACTOR's risk. Prior to any actual construction being performed, there shall be a Pre-Construction Conference to discuss details of execution.

2.2 Intermediate Milestones. CONTRACTOR shall complete the following intermediate milestones under this Contract:

NO.	CONTRACT MILESTONES
1.	Contractor shall complete Domestic North Terminal CBIS design in 210 calendar days (or earlier) after NTP as specified in Exhibit C-1, Section 8.6.4.
2.	Contractor shall obtain the Domestic North Terminal CBIS Building Permit in 240 calendar days (or earlier) after NTP.
3.	Contractor shall achieve Domestic North Terminal CBIS Substantial Completion on or before **490** calendar days after Notice to Proceed (NTP).
4.	Contractor shall provide O&M manuals, warranties, and As-Built drawings within **60** calendar days from the date of Substantial Completion.
5.	Contractor shall reach Final Completion for the Domestic North Terminal CBIS on or before **90** calendar days after Substantial Completion.

2.3 Substantial Completion. CONTRACTOR shall achieve Substantial Completion as identified in this exhibit under section 2.2-Intermediate Milestones. This performance period is inclusive of the time required to gain approval for the Safety and Security plans which may require as many as 45 calendar days for review and approval. The SPCD must also be submitted and approved prior to commencement of work. CONTRACTOR acknowledges that CITY has purchased the entirety of the performance period. CONTRACTOR's schedule may indicate an earlier Substantial Completion date than required by CITY; however, CONTRACTOR is not entitled to any additional compensation should delays occur until the delays exceed the performance period indicated above.

2.4 Advance Information. CONTRACTOR shall give ENGINEER full information in advance in writing as to its plans for performing each part of the Work. If at any time, CONTRACTOR's actual progress is inadequate to meet the requirements of this Contract, ENGINEER may notify CONTRACTOR to take such steps as may be necessary to improve its progress. If, within a reasonable period as determined by ENGINEER, CONTRACTOR does not improve performance to meet the Contract Milestones set forth above, ENGINEER may require an increase in CONTRACTOR's labor force, the number of shifts, overtime operations, additional days of Work construction plant and equipment, all without additional cost to CITY. Neither such notice, nor ENGINEER's failure to issue such notice, shall relieve CONTRACTOR of its obligation to achieve the quality of Work and rate of progress required by this Contract.

2.5 Noncompliance with ENGINEER's Instructions. Noncompliance with ENGINEER's instructions shall be grounds for ENGINEER's determination that CONTRACTOR is not prosecuting the Work with such diligence as will assure completion within the time specified. Upon such determination, CITY may terminate this Contract pursuant to the Clause titled "TERMINATION FOR DEFAULT."

SC-03 LIQUIDATED DAMAGES

3.1 Estimated Liquidated Damages. The parties hereby agree that the damages which CITY to determine with certainty and, therefore, have in good faith estimated as fair compensation, the Liquidated Damages as set forth below. If CONTRACTOR fails to deliver the equipment or materials or perform the services within the times specified in this Contract for the established Milestones & Substantial Completion, or any extensions granted in writing, the CONTRACTOR shall pay to CITY as fixed, agreed, and Liquidated Damages for each calendar day of delay the sum(s) specified below, which amounts shall be independently calculated as follows:

NO.	BASE BID CONTRACT MILESTONES	LIQUIDATED DAMAGES
1.	Contractor shall complete Domestic North Terminal CBIS design in **210** calendar days (or earlier) after NTP as specified in Exhibit C-1, Section 8.6.4.	Three Thousand Dollars and Zero Cents ($3,000.00) per calendar day.
2.	Contractor shall achieve Domestic North Terminal CBIS Substantial Completion on or before **490** calendar days after Notice to Proceed (NTP).	Three Thousand Dollars and Zero Cents ($3,000.00) per calendar day.
3.	Contractor shall provide O&M manuals, warranties, and As-Built drawings within **60** calendar days from the date of Substantial Completion.	Three Thousand Dollars and Zero Cents ($3,000.00) per calendar day.
4.	Contractor shall reach Final Completion for the Domestic North Terminal CBIS on or before **90** calendar days after Substantial Completion.	Three Thousand Dollars and Zero Cents ($3,000.00) per calendar day.

3.2 Application of Liquidated Damages not a Change. The application of Liquidated Damages shall not effect a change in the Contract milestone or relieve CONTRACTOR of its obligation to improve its progress, pursuant to the Clause titled "COMMENCEMENT, PROGRESS,

AND COMPLETION OF THE WORK," to achieve, or to mitigate the failure to achieve, the Contract milestone date or stated area reopening.

3.3 Payment of Liquidated Damages. Payments of Liquidated Damages shall become due immediately upon failure to achieve Contract milestones. CITY shall be entitled to withhold from payments due, offset against other obligations, deduct from retainage, and draw down on letter(s) of credit or performance securities any and all Liquidated Damages due from CONTRACTOR.

3.4 No Restriction of Rights and Remedies. Nothing in this Clause shall operate to restrict any other rights and remedies available to CITY at law or under this Contract.

SC-04 CONTRACT ADMINISTRATION

CONTRACTOR agrees to utilize forms, reports and formats for information furnished by the ENGINEER in conjunction with the execution of work under this Contract.

4.1 Preconstruction Conference. After the award of the Contract and prior to commencement of the Work, a preconstruction conference between the CITY and the CONTRACTOR will be held. The time and place of the meeting will be established by the CITY. All involved parties shall be prepared to discuss any issues or concerns with the execution of the Work.

4.2 Coordination and Progress Meetings. The CONTRACTOR and any requested subcontractors and suppliers shall participate in weekly meetings with the ENGINEER to review and status construction progress and discuss scheduling changes, as required. The time and place for the meetings will be established by the ENGINEER. From time to time, and at the discretion of the ENGINEER, the frequency of such meetings may be lessened or increased, based on the issues and progress at hand. Each Contractor involved shall assume all liability, financial or otherwise, in connection with its contract and shall protect and save harmless CITY from any and all damages that may arise because of inconvenience, delays, or loss experienced by it due to coordination of the Work on the Project and the CITY's other CONTRACTORS. CITY does not warrant or guarantee the coordination of the Work of the CITY's CONTRACTORS nor does the CITY warrant or guarantee the represented completion dates for any contract.

SC-05 CITY FURNISHED DRAWINGS AND SPECIFICATIONS

5.1 CITY will Furnish. CITY will furnish preliminary specifications and design prints of 30% engineering design drawings for each part of the Work under this Contract. Such drawings will give information required for the preparation of detailed drawings by CONTRACTOR.

5.2 Drawings at the Jobsite. CONTRACTOR shall maintain one complete and current set of all Contract Documents available at the Jobsite at all times, including designer-reviewed CONTRACTOR drawings.

SC-06 CITY FURNISHED FACILITIES, MATERIALS

Facilities. The facility listed below will be furnished by CITY and shall be used by CONTRACTOR for this project only.

6.1 Use Charges. NONE

6.2 Temporary Facilities. NONE

6.3 Use of Premises.

6.3.1 In general, the CONTRACTOR shall have limited use of the premises for construction operations as indicated on Contract Documents.

6.3.2 The CONTRACTOR shall limit use of premises to work areas indicated on Contract Documents. Do not disturb portions of the Project Site beyond areas in which work is indicated.

6.3.3 Any shutdown of Airport equipment or systems shall require a 7-day advance notice to the Airport.

6.3.4 For Electrical Work/Temporary Power, the CONTRACTOR shall coordinate temporary power needs by the CONTRACTOR, such as Electric Welding Machines, with the Airport representative in establishing power service point locations. The CONTRACTOR shall provide all equipment and installation to provide the temporary power needs.

6.3.5 CONTRACTOR shall manage premises to maintain a neat, orderly, and clean appearance. CONTRACTOR shall regularly mow along Airport roadways. CONTRACTOR shall comply with any directive of the ENGINEER to remedy conditions of unclean or disorderly appearance within the Work area.

6.4 Owner Furnished Materials. NONE

SC-07 CONTRACTOR FURNISHED DRAWING, DATA, AND SAMPLES

7.1 Design related documents shall be prepared and submittal per the requirements of "Contractor's Scope of Work", Exhibit C.

7.2 Drawings, Data, and Samples by CONTRACTOR. When drawings, samples, certificates and data are required by the Contract Documents or good engineering and construction practices, CONTRACTOR shall prepare and submit them to ENGINEER for DOA review. CONTRACTOR shall allow a minimum of twenty-one (21) calendar days for ENGINEER's review. CONTRACTOR shall prepare and submit to the ENGINEER a submittal schedule, at the same time the Contract Schedule is submitted. Such schedule shall incorporate all of the required and specified submittals, including, but not limited to, drawings, samples, and data. The submittal schedule shall identify each item together with dates for submission of each for review. The

CONTRACTOR shall maintain consistency and logic between the submittal schedule and the Contract schedule.

7.3 ENGINEER Review. ENGINEER review and permission to proceed does not constitute acceptance or approval of submittal including, but not limited to, design details, calculations, analyses, test methods, construction methods, rigging plans, certificates or materials developed or selected by CONTRACTOR and does not relieve CONTRACTOR from full compliance with the Contract requirements.

7.4 Shop Drawings.

7.4.1 Description.

7.4.1.1 Original drawings, prepared by CONTRACTOR Subcontractors, suppliers or distributors, which illustrate the Work; showing fabrication, layout, setting or erection details.

7.4.1.2 Prepared by a qualified detailer.

7.4.1.3 Identify details by reference to sheet and detail numbers shown on contract drawings.

7.4.1.4 Maximum sheet sized: 24 inches x 36 inches

7.4.1.5 Reproductions for submittals: bond or black and white prints.

7.4.1.6 Shop drawings for structural details, false work and for temporary shoring shall be prepared by (or performed under the supervision of) a Georgia licensed P.E. (provided by CONTRACTOR) who shall sign and seal each shop drawing submitted.

7.5 Product Data.

7.5.1 Manufacturer's Standard Schematic Drawings.

7.5.1.1 Modify drawings to delete information that is not applicable to Project.

7.5.1.2 Supplement standard information to provide additional information applicable to Project.

7.5.1.3 Manufacturer's catalog sheets, brochures, diagrams, schedules, performance charts, illustrations and other standard descriptive data.

7.5.1.3.1 Clearly, mark each copy to identify pertinent materials of products.

7.5.1.3.2 Show dimensions and clearances required.

7.5.1.3.3 Show performance characteristics and capacities.

7.6 Samples.

7.6.1 Physical examples. To illustrate materials, equipment, or workmanship, and to establish standards by which completed work is judged.

7.6.2 Office Samples. Of sufficient size and quantity to clearly illustrate specified requirements.

7.6.3 Functional Characteristics. Of product or material, with integrally related parts and attachment devices.

7.7 CONTRACTOR's Responsibilities.

7.7.1 Review and approve shop drawings, product data, and samples prior to submission. Shop drawings that have not been reviewed by CONTRACTOR will be automatically returned to CONTRACTOR.

7.7.2 Verify:

7.7.2.1 Field Measurement, Dimensions, and Existing Elevations

7.7.2.2 Field Construction Criteria

7.7.2.3 Catalog Numbers and Similar Data

7.7.3 Coordinate each submittal with requirements of Work and of Contract documents.

7.7.4 CONTRACTOR's responsibility for errors and omissions in submittals is not relieved by ENGINEER's review of submittals.

7.7.5 CONTRACTOR's responsibility for deviations in submittals from requirements of Contract Documents is not relieved by ENGINEER's review of submittals, unless ENGINEER gives written acceptance of specific deviations.

7.7.6 Notify ENGINEER in writing at time of submission of deviations in submittals from requirements of Contract Documents.

7.7.7 Perform no work, which requires submittals until the return of submittals with ENGINEER's signature indicating a Code 1 or Code 2 review status (See "Code Notation")

7.7.8 After ENGINEER's review, distribute copies.

7.8 Submission Requirements.

7.8.1 The shop drawings shall be submitted in sufficient time to allow discussion and correction prior to beginning the Work. Work shall not be performed, nor materials ordered, prior to the review of the drawing except at CONTRACTOR's risk.

7.8.2 Submit one (1) electronic copy or six (6) hard copies of all product data and shop drawings excluding shop drawings that require the actual drawing be stamped. Submittals will be returned electronically, excluding shop drawings, that require the actual drawing be stamped.

7.8.3 Accompany submittals with transmittal letter, in duplicate containing:

7.8.3.1 Date;

7.8.3.2 Project title and number;

7.8.3.3 CONTRACTOR's name and address;

7.8.3.4 The number of each shop drawing product data and sample submitted;

7.8.3.5 Notification of deviations from contract documents; and

7.8.3.6 Other pertinent data.

7.8.4 Telephone communications or fax transmittals by CONTRACTOR requesting the review and/or approval of CONTRACTOR's submittal will not be accepted by ENGINEER.

7.8.5 Submittals shall include:

7.8.5.1 Data and revision dates;

7.8.5.2 Project title and number;

7.8.5.3 The name of:

7.8.5.3.1 The Engineer responsible for the submittal

7.8.5.3.2 CONTRACTOR;

7.8.5.3.3 Subcontractor;

7.8.5.3.4 Supplier;

7.8.5.3.5 Manufacturer; and

7.8.5.3.6 Separate detailer, when applicable.

7.8.6 Identification of product or material

7.8.7 Relation to adjacent structure or materials;

7.8.8 Field dimensions clearly identified as such;

7.8.9 Specification section number;

7.8.10 Applicable standards, such as ASTM number of Federal Specification;

7.8.11 A blank space, 5 inches x 5 inches for ENGINEER's stamp;

7.8.12 Identification of deviations from Contract documents; and

7.8.13 CONTRACTOR's stamp, initialed or signed, certifying to a review of the submittal, verification of field measurements and compliance with Contract documents.

7.9 Code Notation.

7.9.1 No exceptions taken (Code 1).

7.9.2 Make Corrections Noted. Work may proceed subject to incorporation of noted corrections (Code 2). Contractor must resolve the comments indicated and resubmit to obtain a Code 1 Notation prior to Completion of the affected work.

7.9.3 Amend and Resubmit. Work may not proceed; revise and re-submit (Code 3).

7.9.4 Rejected – See Remarks. Work is not acceptable; Work may not proceed (Code 4).

7.10 Resubmission Requirements of Shop Drawings.

7.10.1 Revise initial drawings as required and resubmit as specified for initial submittal.

7.10.2 Indicate on drawings any changes which have been made other than those requested by ENGINEER.

7.10.3 Product Data and Samples. Submit new data and samples in the same manner as required for initial submittals.

7.10.4 Labeling of Samples. Each sample shall bear a label showing CONTRACTOR's name, Project name, Contract number, name of the item, manufacturer's name, brand name, model number, supplier's name, and reference to the appropriate drawing number, technical specification section and paragraph number; all as applicable.

7.11 Distribution of Submittals After Review.

7.11.1 Distribute copies of shop drawings and product data which carry ENGINEER's stamp to:

ENGINEER – six (6) copies
Others as required

7.11.2 Distribute samples as directed.

7.11.3 Disposition of Samples. Samples which have been reviewed may, at ENGINEER's sole discretion, be returned to CONTRACTOR or retained.

7.12 Certificates and Data. Where certificates are required, four (4) copies of each certificate shall be submitted by, and at the expense, of CONTRACTOR. Submittal shall be made not less than fifteen (15) calendar days prior to the time that the materials represented by such certificates are needed for incorporation into the Work.

7.13 Certificates to Identify. Certificates shall clearly identify the material being certified and shall include but not be limited to, the following information: CONTRACTOR's name, Project name, contract number, name of the item, manufacturer's name, and reference to the appropriate drawing, technical specification section and paragraph number; all as applicable.

7.14 CITY's Rights in Data. CITY shall have an irrevocable unrestricted royalty-free license to use all reports, Information, data, plans, drawings, specifications, computer programs, technical reports, operating manuals or other similar work products developed by CONTRACTOR and paid for by CITY under this Contract, or any other documents procured by, given to, prepared by, or assembled by CONTRACTOR under this Contract.

SC-08 KEY PERSONNEL

8.1 CONTRACTOR shall not reassign, or remove, the key personnel listed below without the prior written authorization of CITY:

NAME	TITLE / POSITION
TBD	Program Manager
TBD	Project Manager
TBD	Safety Manager
TBD	Superintendent
TBD	Quality Control Manager

8.2 In addition to requirements elsewhere in the contract, Project Manager shall have the following experience and qualifications:

8.2.1 Contract administration and interpretation;
8.2.2 Writing ability and computer skills needed to prepare correspondence and documents related to assigned project;

8.2.3 Coordination of communications, approvals, notifications, and record keeping related to changes in the assigned work;

8.2.4 Ability to establish, interpret, and update schedules and records of all correspondence related to contract activity; and

8.2.5 Good understanding of diversity participation requirements.

Qualification skills may be supplemented by a Construction Administrator or Subconsultant as needed. Resume shall be required.

SC-09 ESSENTIAL SUBCONTRACTORS

9.1 The following designated Subcontractors, submitted during the bid process on "FORM B, Essential Subcontractor Qualification Statement" of the Exhibit titled "QUANTITIES, PRICING AND DATA FORMS," are deemed to be essential by the CITY to the execution of this Contract. These Essential Subcontractors may not be removed or substituted by the CONTRACTOR without proper written notice with justification and approval by the CITY. Resumes of key staff shall be included.

Company Names	Scope of Subcontracted Services
Brock Solutions, Inc.	Controls
TBD	Designer of Record
TBD	Conveyor System
TBD	Electrical Subcontractor

9.2 Consent of CITY for Subcontracts. CONTRACTOR shall submit to the CITY a list of any third parties for the performance of all or any portion of the work within fifteen (15) calendar days from Notice to Proceed date for informational purposes. Those Subcontractors designated as essential in the Clause titled "ESSENTIAL SUBCONTRACTORS" need not be resubmitted.

SC-10 ADDRESSES

For all notices, demands, consents, approvals and requests to CITY, the address will be:

City of Atlanta Department of Aviation
1255 South Loop Road
Hartsfield-Jackson Atlanta International Airport
College Park, Georgia 30337

Facsimile (404) 209-1190
Attention: Aviation Assistant General Manager – Planning and Development

With a copy to:

City of Atlanta Department of Aviation
P.O. Box 20509
Hartsfield-Jackson Atlanta International Airport
Atlanta, Georgia 30320
Facsimile (404) 520-6803
Attention: Aviation General Manager

Department of Procurement
City of Atlanta
55 Trinity Avenue S.W.
City Hall South, Suite 1900
Atlanta, GA 30303-0307
Attention: Chief Procurement Officer

Hartsfield-Jackson Development Program
1255 South Loop Road
College Park, GA 30337
Facsimile (404) 684-8973
Attention: Resident Engineer

SC-11 MEASUREMENT FOR PAYMENT

11.1 Lump Sum Items. To establish a basis for payment against Lump Sum items set forth in the Exhibit titled PRICING FORM," CONTRACTOR shall, within ten (10) calendar days after Notice to Proceed, provide a Schedule of Values which proposes:

11.1.1 A reasonable number of measurable interim tasks required to accomplish each lump sum item; and

11.1.3 An allocation of the price to each task with reasonable relationship to the costs incurred in its accomplishment.

11.2 Schedule of Values. ENGINEER shall review CONTRACTOR's Schedule of Values, determine the appropriate tasks and values for progress payments and so advise CONTRACTOR in writing. The Schedule of Values shall be reconcilable to the Project Schedule.

11.3 Payment for Materials on Hand. Partial monthly estimates may include delivered cost of materials to be incorporated in the Work, provided that such materials meet the requirements of the Contract Documents, and are delivered to acceptable sites on the Airport property or at other sites in the vicinity that are acceptable to the CITY. Such delivered costs of stored or stockpiled materials may be included in the monthly estimates after the following conditions are met:

11.3.1 The material has been stored or stockpiled in a manner acceptable to the ENGINEER at, or on, an approved site. The CITY reserves the right to inspect.

11.3.2 The CONTRACTOR has furnished the ENGINEER with acceptable evidence of the quantity and quality of such stored or stockpiled materials.

11.3.3 The CONTRACTOR has furnished the ENGINEER with satisfactory evidence that the material and transportation costs have been paid.

11.3.4 The CONTRACTOR has furnished the CITY legal title (free of liens or encumbrances of any kind) to the material stored or stockpiled.

11.3.5 The CONTRACTOR has furnished the CITY evidence that the material stored or stockpiled is insured against loss by damage or disappearance at any time prior to use in the Work.

It is understood and agreed that the transfer of title and the CITY's payment for such stored or stockpiled materials shall in no way relieve the CONTRACTOR of its responsibilities for furnishing and placing such materials in accordance with the Contract Documents.

In no case will the amount of partial payments for materials on hand exceed the Contract Price for such materials or the Contract Price for the Contract item where such materials will be utilized.

No partial payment will be made for stored or stockpiled living or perishable plant materials.

11.4 Surveys to Determine Quantities. CONTRACTOR shall make all surveys necessary for determining all quantities of work to be paid under this Contract. Copies of field notes, computations and other records made by CONTRACTOR for the purpose of determining quantities shall be furnished to ENGINEER upon request. CONTRACTOR shall notify ENGINEER in writing prior to the time such surveys are made. ENGINEER, at his sole discretion, may witness and verify such surveys. If ENGINEER performs surveys to verify CONTRACTOR surveys which are the basis of payment requests and CONTRACTOR's survey proves to be inaccurate, the cost of verification surveys shall be paid by CONTRACTOR. Measurements and computations shall be made by such methods as ENGINEER may consider appropriate for the class of work measured and the estimate of quantities of work completed shall be compatible with the reporting requirements of the Exhibit titled "SCHEDULE REQUIREMENTS." The dividing limits or lines, between adjacent items or classes of work where not definitely indicated on the drawings or in the specifications shall be as determined by ENGINEER.

SC-12 INVOICING AND PAYMENT

12.1 Submittal of Invoices. CONTRACTOR shall prepare the invoice from the 26th of the month to the 25th of the following month. The invoice must be submitted to the construction manager (CM) on the 5th day of the next month. CONTRACTOR shall meet with the CM, five (5) days prior to submission of the invoice request to verify the quantity of Work in place for progress payment. The CONTRACTOR shall provide the necessary schedule and cost reports for review and agreement of invoiced quantities. Invoices must be entered in the CITY's Online Invoicing System (OLIS).

12.2 Retainage. Within thirty (30) calendar days after receipt of a correct invoice, CITY will pay CONTRACTOR ninety percent (90%) of the approved invoice amount. When fifty (50%) percent of the Contract, including change orders and other additions the Contract value provided for by the Contract documents is due, and the manner of completion of the Contract work and its progress are reasonably satisfactory to the CITY, the CITY will not withhold any more retainage. At the discretion of the CITY and with the approval of the CONTRACTOR, the retainage of each Subcontractor may be released separately as the Subcontractor completes its Work. At the CITY's sole discretion and approval of the Surety, CITY may reduce previously retained amounts upon satisfactory completion of remaining Work. If, after discontinuing the retention, the CITY determines that the work is unsatisfactory or has fallen behind schedule, retention may be resumed at the previous level. If retention is resumed by the CITY, the CONTRACTOR and Subcontractors shall be entitled to resume withholding retainage accordingly. The retainage shall be shared by the CONTRACTOR and subcontractors as their interest may appear.

12.3 Releases of all Claims. CITY may, as a condition precedent to any payment, require CONTRACTOR to submit for itself, its Subcontractors, immediate and remote, and all material suppliers, vendors, laborers, and other parties acting through or under it, complete waivers and releases of all claims against CITY arising under or by virtue of this Contract. Upon request, CONTRACTOR shall, in addition, furnish acceptable evidence that all such claims have been satisfied.

12.4 Amounts Withheld. Any amounts otherwise payable under this Contract may be withheld, in whole or in part, if:

12.4.1 Any claims are filed against CONTRACTOR by CITY or third parties arising out of performance of this Contract;

12.4.2 CONTRACTOR is in material default of any Contract condition including, but not limited to, the schedule, quality assurance and health and safety requirements;

12.4.3 CONTRACTOR has not submitted:

12.4.3.1 Schedules as defined in the Exhibit titled "SCHEDULE REQUIREMENTS,"

12.4.3.2 Proper insurance certificates, or not provided proper coverage or proof thereof, and

12.4.3.3 Required Performance and Payment Bonds or CITY approved equivalent securities.

12.4.4 Adjustments are due from previous overpayment or audit result; or

12.4.5 Offsets in favor of CITY in other transactions are asserted.

12.5 Release of Withholdings. CITY will release and pay such withheld amounts if CONTRACTOR:

12.5.1 Has provided As-Built information approved by the ENGINEER.

12.5.2 Pays, satisfies, or discharges any claim of CITY, or third parties against CONTRACTOR; or

12.5.3 Cures all defaults in the performance of this Contract.

12.6 Claims Against CONTRACTOR. If claims filed against CONTRACTOR connected with performance under this Contract, for which CITY may be held liable if unpaid (e.g. unpaid withholding and back taxes), are not promptly removed by CONTRACTOR after receipt of written notice from CITY to do so, CITY may remove such claims and deduct all costs in connection with such removal form withheld payments or other monies due, or which may become due, to CONTRACTOR. If the amount of such withheld payment or other monies due CONTRACTOR under this Contract is insufficient to meet such costs, or if any claim against CONTRACTOR is discharged by CITY after final payment is made, CONTRACTOR and its Surety or sureties, if any, shall promptly pay CITY all costs incurred thereby regardless of when such claim arose, or whether such claim imposed a lien upon the Project or the real property upon which the Project is situated.

12.7 Payment of Final Invoice. CITY shall, within thirty (30) calendar days following Final Acceptance of the Work as a whole and after submittal of a final invoice, pay to CONTRACTOR the amount then remaining due, provided that, CONTRACTOR shall have furnished CITY for itself, its Subcontractors, immediate and remote, and all material suppliers, vendors, laborers, and other parties acting through or under it, waivers and releases of all claims against CITY arising under or by virtue of this Contract, except such claims, if any, as may with the consent of CITY, be specifically excepted by CONTRACTOR from the operation of the release in stated amounts to be set forth therein.

12.8 Final Release of Retainage. Prior to the Final release of Retainage, the CONTRACTOR shall certify to the CITY, in writing, in a form satisfactory to the CITY, that all Subcontractors, materialmen, suppliers, and similar firms or persons involved in the CITY Contract, have been paid in full at the time of Final payment to the CONTRACTOR by the CITY, or will be paid in full utilizing the monies constituting Final payment to CONTRACTOR.

12.9 Payment Does Not Constitute Acceptance. No payments of invoices, or portions thereof, shall at any time constitute approval or acceptance of any Work under this Contract, nor be considered a waiver by CITY of any of the terms of this Contract; however, title to all equipment and materials which has vested in CITY pursuant to the Clause titled 'TITLE AND RISK OF LOSS" shall not be part of CONTRACTOR's property or estate, unless otherwise specified by applicable law, in the event CONTRACTOR is adjudged bankrupt or makes a general assignment for the benefit of creditors, or if a receiver is appointed on account of CONTRACTOR's insolvency, or if all or any portion of this Contract is terminated.

12.10 Submittal of Invoices. CONTRACTOR shall submit an original and one (1) copy to:

Hartsfield-Jackson Development Program
Construction Management
Attn: Assigned Resident Engineer (TBD)
1255 South Loop Road
College Park, GA 30337

Reference: PROJECT NUMBER FC-8071 – EXPLOSIVE DETECTION SYSTEM (EDS) RECAPITALIZATION AND OPTIMIZATION – NORTH DOMESTIC TERMINAL

12.11 Waiver of Applicability of Prompt Pay Act. CONTRACTOR specifically waives the application to this Contract of Georgia Code Annotated §§ 13-11-1, 13-11-4, 13-11-7, and 13-11-8.

SC-13 WAGE REQUIREMENTS

CONTRACTOR shall pay the prevailing wages as stipulated by the wage scale(s), which is incorporated in the Contract Documents (Section titled "WAGE AND BENEFITS RATES"). Such scale of wages to be paid shall be posted by the CONTRACTOR in a prominent and easily accessible place at the site of the work.

SC-14 PROJECT CONTINGENCY AND ALLOWANCES

The "Project Contingency" allowance is that sum of money set aside and under the control of the ENGINEER, or his designee, as part of the Project budget which has been designated to pay for scope modifications, unforeseen events, Work items consistent and related to the Contract but not shown on the drawings and/or specifications but necessary for the successful completion of the Work, or emergences during the course of the Project not otherwise contemplated in the Contract. The CITY is solely responsible for the appropriation of these funds. CONTRACTOR shall have no claim to such funds. The Work shall be assigned and directed by the ENGINEER, or his designee, in written form. Measurement and payments shall be in accordance with the Clause titled "INVOICING AND PAYMENT" and the Clause titled "PRICING OF ADJUSTMENTS."

The Allowance is that sum of money included in the Total Contract Price that is under the control of the ENGINEER, or his designee, to pay for the scope set out for the allowance item. Once the scope of work for the allowance items is fully defined and issued to the CONTRACTOR, measurement and payments shall be in accordance with the Clause titled "INVOICING AND PAYMENT" and the Clause titled "PRICING OF ADJUSTMENTS." If the compensation for completing the allowance item work is less than the allowance amount, the savings shall revert to the CITY. If the compensation for completing the allowance item work is more than the allowance amount, the CONTRACTOR shall be paid the difference. The difference shall be funded by either the issuance of a Project Contingency or a Change Order. All such allowances shall cover all direct, indirect, and general condition costs of the allowance work and all profit and overhead of the CONTRACTOR for the allowance work.

SC-15 TEMPORARY ACCESS AND HAUL ROADS

15.1 General. CONTRACTOR shall, at its expense, construct and maintain temporary access and haul roads as may be necessary for the proper performance of this Contract. CONTRACTOR shall submit a layout of all proposed roads prior to road construction. The layout shall show widths of roads, direction of traffic, curves, grades, and related information in sufficient detail for review by ENGINEER. Roads constructed on CITY's land or rights-of-way shall be subject to CITY's approval.

15.1.1 The CONTRACTOR's access route to the Project site shall be as shown on drawings.

15.1.2 The location of access and haul routes in the Aircraft Operations Area (AOA), if applicable, are as shown on the drawings. Use of unauthorized haul routes shall not be acceptable.

15.1.3 Roads used by the CONTRACTOR for access or hauling shall be kept clean and accessible to all other Airport traffic for the entire duration of the Project. Haul trucks must be covered and any spillage or debris buildup promptly removed from all haul routes on Airport and public roads. No separate payment shall be made for keeping the roads clear and accessible.

15.1.4 The CONTRACTOR shall control dust and debris from its operation to a level acceptable to the CITY and have on the Project vacuum sweepers, watering trucks, and other equipment necessary to control dust. All methods for controlling dust shall be subject to the CITY's approval. Dust control shall be strictly monitored due to its impact on aircraft safety. Failure to properly control dust, or to respond to any request to do so, will result in construction activities being stopped.

15.1.5 All excess material produced by the CONTRACTOR's operations shall be disposed of off Airport property at an appropriate, licensed construction and demolition disposal facility at no additional cost to the CITY.

SC-16 CONTRACTORS' WORK AREA

16.1 Assignment of Work Areas. All CONTRACTOR work areas on the Jobsite will be assigned by ENGINEER. CONTRACTOR shall confine its operations to the areas so assigned. Should CONTRACTOR find it necessary or advantageous to use any additional offsite area for any purpose whatsoever, CONTRACTOR shall, at its expense, provide and make its own arrangements for the use of such additional offsite areas.

16.2 Air Operations Area Controls. At all times during the performance of this Contract, CONTRACTOR shall provide for free and unobstructed movement of aircraft in the Air Operations Area (AOA) of the Airport, shall identify all hazards to aircraft and shall provide for the control of personnel and vehicular traffic, all in accordance with Section 16.3 and 16.4. A detailed Traffic Control Plan shall be submitted for approval to the ENGINEER prior to the commencement of any construction activities.

16.3 Operating within Critical Areas. When the Work requires CONTRACTOR to conduct its operations within areas adjacent to active runways, taxiways, aprons, and/or navigational aids, the Work shall be coordinated with CITY and FAA through ENGINEER. CONTRACTOR shall request authorization from ENGINEER forty-eight (48) hours prior to any closure or interference with the Aircraft Operations. While working in the AOA, CONTRACTOR shall maintain constant communications and with the ENGINEER and shall immediately obey all instructions from the ENGINEER.

16.4 Operating Close to Aircraft. When working in close proximity to aircraft, CONTRACTOR shall:

16.4.1 Yield the right-of-way to aircraft.

16.4.2 Keep the movement of vehicles across active taxiways and aprons to a minimum.

16.4.3 Obtain proper approval from the ENGINEER before allowing any equipment or vehicles to cross an active runway.

16.4.4 Require all operators to maintain a safe and reasonable speed.

16.4.5 Utilize equipment with due regard for existing weather conditions.

16.4.6 Remove, from the Jobsite, any person operating unauthorized vehicles or equipment in a restricted area, or operating vehicles or equipment in a reckless and unreasonable manner.

16.4.7 Keep all trash and debris from taxiways, runways, and ramp areas.

16.4.8 Prohibit all vehicles and equipment from being operated within one hundred sixty (160) feet of the centerline of an active taxiway or within two hundred fifty (250) feet of the centerline of the active runway, except on Airport service roads or with the express consent of ENGINEER.

16.4.9 Immediately cease work and vacate any operations or work area at any time if instructed to do so by ENGINEER. These instructions may be issued by radio or other appropriate means. CONTRACTOR shall not return to a vacated area until authorized by ENGINEER.

16.5 Closing the AOA. When the Work requires closing the AOA, or portion of such area, CONTRACTOR shall furnish, erect, and maintain temporary markings and associated lighting conforming to the requirements of FAA Advisory Circular 150/5370-2F Operational Safety of Airports During Construction. Open-flame type lights shall not be permitted within the AOA.

16.6 Employee Parking. CONTRACTOR shall arrange employee parking outside the AOA and provide its employees transportation into the Jobsite. CONTRACTOR's access point into the AOA shall be as directed by the ENGINEER.

16.7 Storage of Equipment and Materials. Materials shall be so stored as to assure the preservation of their quality and fitness of the Work. Stored materials, even though approved before storage, may again be inspected prior to their use in the Work. Stored materials shall be located so as to facilitate their prompt inspection. The CONTRACTOR shall coordinate the storage of all materials with the ENGINEER. Materials to be stored on Airport property shall not create an obstruction to air navigation nor shall they interfere with the free and unobstructed movement of aircraft or ground traffic. CONTRACTOR shall not store materials on the AOA without written approval by DOA Airside Operations and the FAA. Unless otherwise shown on the plans, the storage of materials and the location of the CONTRACTOR's plant and parked equipment or vehicles shall be as directed by the ENGINEER. Private property shall not be used for storage purposes without written permission of the owner or lessee of such property. The CONTRACTOR shall make all arrangements and bear all expenses for the storage of materials on private property. All storage sites on private or airport property shall be restored to their original condition by the CONTRACTOR at his/her entire expense, except as otherwise agreed to (in writing) by the CITY or lessee of the property. CONTRACTOR shall base his bid on no stored materials on the AOA without written approval by DOA Airside Operations and FAA. Such approval may be withheld.

16.7 Material Handling. Contractor's responsibility for materials and plant equipment required for the performance of this Contract shall include:

16.7.1 Receiving and unloading;

16.7.2 Storing in a secure place and in a manner subject to City's review. Outside storage of materials and equipment subject to degradation by the elements shall be in weather tight enclosures provided by the contractor;

16.7.3 Delivering from storage to construction site all materials and plant equipment as required;

16.7.4 Maintaining complete and accurate records for City's inspection of all materials and plant equipment received, stored and issued for use in the performance of this Contract.

16.8 Construction Lighting for Night Work. The Contractor shall cooperate with the FAA and the City when aligning his construction floodlights so as not to interfere with aircraft pilots or air traffic controllers' vision. When requested by the City, the Contractor will respond quickly to adjust the lighting as directed.

16.9 Height Restrictions. FAA Regulation for use of cranes and other elevated equipment will be strictly enforced. The Contractor shall be responsible for submitting FAA Form 7460 to the City and obtaining FAA approval prior to Contractor's use of any elevated equipment. Allow a minimum of 45 days for the Form 7460 to process through FAA.

16.10 Protection of Employees. When the project is within the vicinity of large jet aircraft operations the Contractor shall take all precautions necessary to protect his employees, equipment, and work in progress from aircraft noise and jet engine blast.

SC-17 CLEANING UP

17.1 Clean Work Areas. CONTRACTOR shall, at all times, keep its work areas in a neat, clean and safe condition. While working in the AOA, the CONTRACTOR shall keep the areas immediately adjacent to the Jobsite clean at all times. The CONTRACTOR shall sweep adjacent pavement areas at least once daily or as directed by the ENGINEER. If grass within the construction limits exceeds ten (10) inches in height, the CONTRACTOR is responsible for mowing. CONTRACTOR shall, on a daily basis, remove from the Work area all its equipment and uninstalled materials while maintaining temporary walls and protective barriers to provide a neat and safe area for the public. Upon completion of any portion of the Work, CONTRACTOR shall promptly remove from the Work area all its equipment, construction plant, temporary structures, and surplus materials not to be used at, or near, the same location during later stages of the Work.

17.2 Rubbish and Salvage. Upon completion of the Work and prior to final payment, CONTRACTOR shall, at its expense, satisfactorily dispose of all rubbish, remove all plant, buildings, equipment, and materials belonging to CONTRACTOR and return to CONTRACTOR's warehouse or Jobsite storage area all salvageable CITY supplied materials. CONTRACTOR shall leave the premises in a neat, clean and safe condition.

17.3 Failure to Comply. In the event of CONTRACTOR's failure to comply with the foregoing requirements, CITY may accomplish same at CONTRACTOR's expense.

17.3 Maintenance. Contractor shall maintain the Work including any provisionally accepted portions thereof and including any portions occupied by City or put into service until final acceptance of the Work as a whole. Use shall not constitute acceptance, relieve Contractor of its responsibilities, or act as a waiver by the City of any terms of this contract.

SC-18 COORDINATION AND WORK ON AIRPORT PROPERTY

18.1 For some portions of this Project, construction will occur within the Security Identification Display Area (SIDA). The SIDA is the airport security area with restricted access. The CONTRACTOR will be required to meet all requirements for entering and operating in these areas as described in the Exhibit titled "AIRPORT SECURITY REQUIREMENTS."

18.2 All CONTRACTOR personnel, including subcontractors, engaged in work within the SIDA shall be Airport badged and fingerprinted as required in the Exhibit titled "AIRPORT SECURITY REQUIREMENTS." Due to the time necessary to complete the badging and fingerprinting process, the CONTRACTOR may start the process after contract Award and before construction NTP.

18.3 All construction activities within the SIDA shall be conducted in a manner acceptable to the CITY and FAA to provide acceptable levels of safety, security, and access for all Airport operations. Periodic meetings will be held to coordinate the activities of this contract with other Airport operations.

18.4 All costs associated with establishing and maintaining SIDA security shall be included in the price bid for mobilization unless included in a separate Special Provisions (SP) item.

18.5 The CONTRACTOR shall cooperate with existing and future Contractors working in the area and at all times will coordinate its efforts to maintain necessary construction and hauls routs and to assure that all contracts continue on a timely basis.

SC-19 PROTECTION OF AIRPORT OPERATIONS SYSTEMS

19.1 Location of Airport Operations Systems. In addition to CONTRACTOR's general obligations in the Clause titled "CONTRACTOR'S WORK AREA," numerous Airport operations systems, including, but not limited to, radio receivers and transmitters, U.S. Weather Bureau facilities, Navigation Aids, Communication and Security systems and associated electrical cables will be in use during the performance of Work. CONTRACTOR shall protect such systems at all times. Airport Operations Systems may be shown on drawings, marked by ENGINEER, or obvious from visual inspection but CONTRACTOR shall inquire and inspect to determine the location of any and all such systems and shall be responsible to avoid damage to any of them at all times.

19.2 Damage to Airport Operations Systems. If any portion of any Airport operations system is damaged by CONTRACTOR, or anyone operating under CONTRACTOR's control or direction, CONTRACTOR shall immediately notify ENGINEER in writing and propose both temporary and permanent repairs to restore system functions and return the system to its original condition at no additional cost to the CITY. The material, workmanship, and methods for repairs must all be approved by ENGINEER and such repairs may be witnessed or inspected by owners or operators of such systems as well as ENGINEER. If in the opinion of ENGINEER, CONTRACTOR is not qualified to perform such repairs, they may be performed by others and the reasonable costs of such repairs shall be deducted from payments otherwise due CONTRACTOR.

SC-20 DELAY FOR OPERATIONS

20.1 Restrictions to Access. Access to work areas may be restricted from time to time by necessity of Airport operations. CONTRACTOR has taken into account and provided in its planning, scheduling, and pricing for disruptions including, but not limited to, clearing traffic congestion or accidents, repairs to Airport facilities, heightened Security conditions and the like.

20.2 Closures. Runway and Taxiway closures at any time, or duration, are prohibited during the following holidays:

20.1.1 Memorial Day Weekend: Thursday through Tuesday

20.1.2 Labor Day Weekend: Thursday through Tuesday

20.1.3 One week prior to Thanksgiving through the Monday after Thanksgiving

20.1.4 One week prior to Christmas day through one week after New Year's Day

SC-21 CUTTING AND PATCHING

CONTRACTOR shall be responsible for all cutting, fitting, and patching required to complete the Work. The ENGINEER, at his discretion, may request the uncovering of the Work to provide for alterations, restoration, or refinishing of existing work. A written request to the ENGINEER, in advance of cutting or patching items of work which may affect structural value or integrity, is required for approval.

SC-22 INSPECTIONS AND QUALITY

22.1 Inspections and Audits. All material and equipment furnished and work performed shall be properly inspected by CONTRACTOR at its expense, and shall at all times be subject to quality surveillance and quality audit by the CITY who, upon reasonable notice, shall be afforded full and free access to the shops, factories, or other places of business of CONTRACTOR and its subcontractors for such quality surveillance or audit. Such quality auditors or inspectors are not authorized to change, revoke, or waive any provision of this Contract, not to issue instructions contrary to Contract requirements, nor to direct the efforts of any of CONTRACTOR's employees in any way. CONTRACTOR shall provide safe and adequate facilities, drawings, documents, and samples as requested, and shall provide assistance and cooperation including stoppage of work to perform such examination as may be necessary to determine compliance with the requirements of this Contract. Any work covered prior to any planned quality surveillance or test by the CITY shall be uncovered and replaced at the expense of CONTRACTOR if such covering interferes with or obstructs such planned inspection or test.

22.2 Uncovering of portions of the Work. At any time before Final Acceptance, ENGINEER may, for the purpose of inspection, direct CONTRACTOR to uncover portions of the Work which have been completed and covered up. If examination proves the completed work to be defective, corrections shall be made pursuant to the Clause titled "GC-42, WARRANTY AND COMPONENT WARRANTIES". If the Work is not defective, the impact of uncovering and restoration shall be treated as a change pursuant to the Clause titled "GC-38, CHANGE DOCUMENTS".

22.3 Defective Work. If any work is determined by the CITY to be defective or not in conformance with this Contract, the provisions of the Clause titled "GC-42, WARRANTY AND COMPONENT WARRANTIES" shall apply.

22.4 Samples. CONTRACTOR shall furnish samples as requested and shall provide reasonable assistance and cooperation necessary to permit tests to be performed on materials or work in place including reasonable stoppage of work during testing. Any material or assembly that does not conform to the requirements of the Contract Documents shall be considered unacceptable and shall be rejected. The CONTRACTOR shall remove any rejected material or assembly from the site of the Work, unless otherwise instructed by the ENGINEER.

No rejected material or assembly, the defects of which have been corrected by the CONTRACTOR, shall be returned to the site of the Work until such time as the ENGINEER has approved its use in the Work.

22.5 Quality Assurance. The CONTRACTOR is advised that the cost of failing quality assurance (by CITY) tests requiring additional tests to confirm compliance will be deducted from the monies due to CONTRACTOR through the Progress Payment Process.

EXHIBIT C

PROGRAM REQUIREMENTS

EXHIBIT C-1

SCOPE OF WORK AND TECHNICAL SPECIFICATIONS

EXHIBIT C-1

DESIGN-BUILD CONTRACTOR'S SCOPE OF WORK

1.0 INTRODUCTION

The City of Atlanta (COA) has established specific Program Requirements for the Design and Construction of the Explosion Detection System (EDS) Recapitalization and Optimization project. This Exhibit C establishes the design-build CONTRACTOR's scope of work and the minimum requirements for the project.

2.0 DESIGN/BUILD CONTRACTOR'S SCOPE OF WORK

Except as specified elsewhere in the Contract, CONTRACTOR shall furnish all design; procurement; construction; labor; materials; tools; supplies; equipment; transportation; supervision; warehousing; and all other technical and professional services; and shall perform all operations necessary to provide the herein described upgrades to the Checked Baggage Inspection System (CBIS) located in the Domestic North Terminal at Hartsfield-Jackson Atlanta International Airport. The CBIS will be in active operation during the installation of the upgrades. All design and construction shall comply with the Transportation Security Administration's (TSA) Planning Guidelines and Design Standards (PGDS) 4.2. The removal of the existing EDS machines along with providing and installing the new EDS machines will be by others.

CONTRACTOR is required to utilize Brock Solutions, Inc. to accomplish the design, installation and implementation of all programming and controls work associated with this Project. Controls scope shall meet or exceed TSA PGDS 4.2 and project specification requirements.

CONTRACTOR shall be solely responsible for all matters relating to Safety, Security and Quality Assurance/Quality Control associated with this project. Associated detail requirements are presented elsewhere in this Contract.

CONTRACTOR shall be responsible for using the Ricondo/CAGE produced TSA 30% Design deliverables and supporting documents to develop, advance and complete this project design to meet all 70% and 100% TSA and DOA design deliverable requirements as specified herein. The designated project concept documents labeled "Project Concept Document Number" in "Exhibit C-3: List of Supporting Documents" is a list of all the Ricondo/CAGE 30% documents that provide the basis of the project concept. These 30% drawings are strictly conceptual in nature. As a part of the inherent design evolution, the CONTRACTOR shall adjust the conceptual design in terms of efficiency of scheduling, detail construction phasing, detail installation, operation and maintenance in order to provide to the Owner a system that best suits the intended purposes of this

project. There is also a list of Reference Documents in Exhibit C-3 that supports the design.

A list of the supplemental documents appears in Exhibit C-3. The documents with a "B" designation are documents that show the project concept that was developed by the Ricondo/CAGE design team. The documents with a "R" designation are documents that are reference documents. The "R" or reference documents will supplement the project concept documents.

After CONTRACTOR'S 100% Design deliverables are approved by both the TSA and DOA, the CONTRACTOR shall be solely responsible for the complete procurement, installation, implementation and construction of all work as described and required in the approved 100% Design deliverables.

3.0 PROJECT BACKGROUND

Hartsfield-Jackson Atlanta International Airport (ATL) has pursued and received two (2) TSA Other Transaction Agreements (OTA) reimbursable funding for Recapitalization of three eligible CBISs located in Domestic Terminal North, Domestic Terminal South and Concourse E. The existing CTX 9000 Explosive Detection System (EDS) machines will be near the end of their useful life by the scheduled Date of Beneficial Use for this project. The scope of this project is for the Domestic Terminal North CBIS only.

The Airport Recapitalization and Optimization Assessment (02/22/13) produced by the TSA recommended that the changes made to the Baggage Handling System (BHS) be limited to a recapitalization approach. This is the path that the Integrated Local Design Team (ILDT) has pursued. The ILDT consist of the DOA, Ricondo & Associates, CAGE Inc., and TSA local.

To comply with the TSA Planning Guidelines and Design Standards (PGDS) version 4.2, the CBIS will be modified as part of the TSA recapitalization program. The existing pre PGDS system was installed in 2005 and is currently not compliant with PGDS Version 4.2. Due to the age of the existing baggage handling equipment, the system will require replacement of the individual conveyor lines to meet the required Planning Guidelines and Design Standards (PGDS) Version 4.2. This recapitalization is unique in that the CBIS supports high volume flight operations and must be operational throughout the project. As a result, construction phasing will be critical to the successful installation of the new CTX 9800 equipment. A detailed construction phasing plan is a required component of the Design/Build Contractor's design scope.

4.0 PROJECT DESCRIPTION

4.1 General Project Scope: This project will consist of both the design, procurement and construction required to modify the Checked Baggage Inspection System (CBIS) in the Domestic North Terminal. The CBIS will be modified as part of the TSA recapitalization program to comply with the TSA Planning Guidelines and Design Standards (PGDS) 4.2.

The EDS (Explosive Detection System) Recapitalization Project will be replacing the old EDS machines with the newest EDS machine, the CTX 9800. It will not be a one-for-one replacement since the new machines can screen bags at a higher rate than the existing CTX 9000 machines. The only existing conveyor equipment that will be replaced by this project is that which must be replaced to facilitate the installation of the new CTX 9800 machines. This includes any upgrades or replacement of existing conveyors, equipment, associated controls and electrical power necessary to accommodate the greater volume of bags to fewer lines.

The EDS Systems currently consist of 8 CTX 9000 machines. Each machine has one or two incoming lanes of conveyor that supply bags to the EDS machine and two lanes (one clear and one non-clear) that take away the bags from the machine. Together the incoming and outgoing system of conveyor lanes to and from an EDS machine is referred to as a shunt line. Each shunt line consists of approximately 60 to 70 linear feet of conveyor. Each existing shunt line has two or three High Speed Diverters (HSD), three or four merge belts, multiple belt sections, belt curves and multiple Variable Frequency Drives (VFD). The existing shunt lines will be removed under this project and replaced by new shunt lines. The new shunt lines will consist of two new HSDs, multiple queue belts, two vertical sortation devices (VSD) and one VFD per belt drive. Additionally, the project will be replacing any old HSDs with new ones and adding VFDs to all tracked belts in the system for better efficiency. All this conveyor work has electrical and controls work associated with it. Additionally, the EDS machines require an updated controls network because of the outdated network that is currently in place. All the program logic controllers (PLC) that control all the motors and drives that run the conveyors will have software upgrades and, in some cases where specified on the 30% drawings, hardware upgrades. The upper level controls which consist of the graphic interface will be upgraded (to reflect the layout changes) and the servers for the data bases will also be upgraded.

4.2 Existing Conditions: The Domestic North Terminal CBIS occupies approximately 50,000 square feet. The original design, installed in 2005, accommodated ten CTX 9000's, of which nine were installed and a CBRA room that accommodated 23 Search Tables. In 2012 the TSA removed one CTX 9000 and installed a CTX 9800 as a testing location. This necessitated the renovation of one "suspect" line of the CBRA with the new configuration of queue belts and sliding tables. The

test machine was removed after the completion of the testing and there are currently 8 CTX 9000's. The CBRA is currently being upgraded to PGDS 4.1. Refer to Supplemental Documents B02 for drawing of existing Domestic North Terminal Hold Baggage System (HBS).

4.3 **Scope of Work:** A summary of the scope of work is presented below. All design and construction work defined below must conform to the latest version of the TSA Planning Guidelines and Design Standards (PGDS) 4.2, meet the requirements outlined in the TSA Other Transaction Agreements (see Exhibit C-2) and meet all other TSA and DOA requirements of this contract. The designated project concept documents labeled "Project Concept Document Number" in "Exhibit C-3: List of Supporting Documents" is a list of all the Ricondo/CAGE 30% documents that provide the basis of the project concept.

4.3.1 **Base Scope of Work:** Provide the design, procurement and construction of Domestic North Terminal CBIS EDS. The total number of conveyor shunt lines in Domestic North Terminal CBIS is 6 shunt lines. Refer to Supplemental Documents (Exhibit C-3), Project Concept Document Numbers B02, B05, B08, B10, B11, B12, B13 and B14 for details of Domestic North Terminal CBIS work to be performed. The removal of existing EDS machines along with providing and installing of the new EDS machines will be by others (TSA will be contracting directly with another contractor that will be providing these services).

4.3.2 **Additive Alternate #1:** Provide the cost for providing insurance for the base scope of work in accordance with Exhibit D.

4.3.3 **Additive Alternate #2:** Provide the design, procurement and construction of an additional non-clear conveyor line in the Domestic North Terminal CBIS that will serve approximately one half (½) of the EDS machines. Provide an additional second chance diverter that discharges into a different clear line than the existing non-clear line diverter. The new non-clear line shall merge into the existing non-clear line at existing merge MT1-15. Refer to Supplemental Documents B02 Drawing # B6-N-101 for details of the location of Domestic North Terminal CBIS existing merge MT1-15.

4.3.3 **Additive Alternate #3:** Provide the design, procurement and installation of one Uninterrupted Power Supply (UPS) for each of the 6 EDS machines in the Domestic North Terminal CBIS. UPS units will be provided by others. Refer to Supplemental Documents B15 for details of UPS units.

4.3.4 A detailed project phasing concept shall be developed by the Contractor and submitted to the DOA for coordination and approval by the DOA and

the TSA. The information contained in the City supplied Ricondo/CAGE preliminary phasing plans may be utilized to develop the Contractor's Phasing Plan.

5.0 PROJECT DATA

5.1 The following information and criteria are provided for the contractor's use and compliance.

5.1.1 The Design/Build Contractor shall comply with all of the requirements set forth in the two executed Other Transaction Agreements (OTA) between the Department of Homeland Security Transportation Security Administration and the City of Atlanta. Checked Baggage Recapitalization Screening Design Services Project OTA # HSTS04-13-H-CT1043 and Checked Baggage Recapitalization Screening Construction Services Project OTA # HSTS04-13-H-CT141 are the two agreements. Copies of the two OTAs appear in Exhibit C-2.

5.1.2 **Supplemental Documents:** There are a large number of supplemental documents the contractor needs to use in order to do this design/build project. These documents include, but are not limited to in-progress design drawings, in-progress design specifications, basis of design reports, variance requests to the TSA, Baggage Handling System (BHS) dynamic simulation modeling results and miscellaneous letters to the TSA.

5.1.2.1 A list of the supplemental documents appears in Exhibit C-3. The documents with a "B" designation are documents that show the project concept that was developed by the Ricondo/CAGE design team. The documents with a "R" designation are documents that are reference documents. The "R" or reference documents will supplement the project concept documents.

5.1.3 **Security Sensitive Information** (SSI): There is information within many of the documents associated with this Contract that must be handled according to appropriate SSI guidelines including procedures for the handling, storing, using, distributing, transmitting and destroying of this information. Abiding by the governing SSI requirements is strictly the responsibility of the Contractor. The actual Supplemental Documents listed in Exhibit C-3 will be made available to approved parties only on a compact disc (CD).

6.0 DESIGN PROFESSIONAL SERVICES

6.1 Design/Build Contractor shall, be consistent with applicable state licensing laws, provide through qualified, licensed design professionals employed by Design/Build Contractor, or procured from qualified, independent licensed Design Consultants, the necessary design services, including architectural, engineering and other design professional services, for preparation of the required drawings, specifications and other design submittals to permit Design/Contractor to complete the Work consistent with the Contract Documents. Nothing in the Contract Documents is intended or deemed to create any legal or contractual relationship between City and Design Consultant.

6.2 The Design/Build Contractor shall prepare, as part of the project technical specification, the requirements for testing and commissioning all systems, including the preparation of the testing for TSA approval. The testing and commissioning shall ensure that all systems have been properly installed, function according to the specifications and the manufacturer's requirements, and satisfy warranty requirements. Test result and warranty certificates shall be included in the Operation and Maintenance (O&M) Manuals for each system. Design/Build Contractor is responsible for coordinating and supplying proper support of all testing requirements as stated in the TSA PGDS and project specifications.

6.3 **Field Investigation and Site Survey:** The Design/Build Contractor shall coordinate, schedule, and conduct site investigations and project meetings at the project location with the DOA Project Manager and/or the DOA Construction Manager.

6.4 **Compliance with Building Codes:** In accordance with Public Law 100-678, Federal Agencies must comply with National Building Codes, Local Building Codes, and Zoning Ordinances. The Designer of Record shall comply with the appropriate Statutes governing the signing and sealing of engineering reports and drawings. Accordingly, final design drawings and specifications shall be signed and sealed by Professional Architects and Engineers registered to practice in the State of Georgia.

6.5 **Code Analysis:** The Design/Build Contractor shall submit a code analysis indicating compliance with applicable codes and, if applicable, environmental permitting. The topics for the code analysis are applicable codes, occupancy classifications, type of construction, fire resistance ratings, interior finishes, flame spread and smoke develop ratings, emergency egress, fire suppression, fire detection and alarm systems, combustible and flammable liquids, structural live loads and dead loads and seismic design.

6.6 **Security:** Design shall conform to all security requirements provided by Homeland Security/TSA and the ATL Public Safety and Security Division. Design and Construction documents shall be safe guarded to prevent unnecessary disclosure of design features and physical security measures.

6.7 **Progress Design Reviews:** The DOA, ILDT TSA, and as necessary on a limited basis participating DOA airline representatives and DOA consultants will review and provide comments on each submittal. The A-E shall prepare an itemized response to indicate if the A-E disagrees or concurs with the comments and if a correction or change will be made to the submittal. All review comments must be resolved by the A-E prior to submitting final documents.

6.8 **Meeting Minutes:** The contractor shall document and distribute all project meeting minutes. A copy of all meeting minutes shall be included in each progress submission. The meeting minutes need only record the date, time, location, attendees, major issues discussed, action items/responsible party and conclusions reached.

7.0 STANDARD OF CARE FOR DESIGN PROFESSIONAL SERVICES

7.1 The standard of care for all design professional services performed to execute the Work shall be the care and skill ordinarily used by members of the design profession practicing under similar conditions at the same time and locality of the Project, including but not limited to, the compliance of all applicable codes and standards.

8.0 SCOPE OF DESIGN SERVICES

8.1 The contractor shall provide all architecture & engineering (A/E) design services required for the project. Contractor shall indicate one Designer (GA registered Engineer or Architect) or one A/E design firm, the Designer of Record, to coordinate all design disciplines required for the project. The Designer of Record shall have design experience on a minimum of three successful design projects associated with US airport baggage handling systems.

8.2 **Design Elements:** The design work associated with this project consists of two elements. The first element is the design that is required to satisfy TSA requirements. The second element is the design required to meet the City of Atlanta Department of Aviation standards and requirements.

8.3 **TSA Design Requirements:** The design shall meet all design requirements established by the TSA. This shall include but not be limited to design

requirements in the TSA/COA Checked Baggage Recapitalization Screening Design Services Project Other Transaction Agreement (OTA), TSA/COA Checked Baggage Recapitalization Screening Construction Services Project OTA, and the TSA Planning Guidelines and Design Standards (PGDS) 4.2.

8.4 **TSA Design Phase Services:** The Designer of Record shall provide all services for performance of the following tasks listed below along with any other tasks required by TSA.

8.4.1 70% TSA Design Deliverables Submitted.

8.4.2 70% TSA Design Deliverables Approved.

8.4.3 100% TSA Design Deliverables Submitted.

8.4.4 100% TSA Design Deliverables Approved.

8.4.5 Final TSA Project Construction Drawings and Specifications Approved

8.4.6 TSA Project Record Drawings/CAD As-Built Submitted

8.5 **TSA Design Deliverables:** TSA design deliverables are all deliverables defined in the TSA OTA agreements that appear in Exhibit C-2.

8.6 **DOA Design Phase Services:** Contractor shall conform to the Hartsfield-Jackson Atlanta International Airport DOA A/E Design Guidelines located on the internet at http://apps.atlanta-airport.com/engineeringguidelines/elements.asp?submod=main&type_id=1. The Designer of Record shall provide all services for performance of the following tasks below:

8.6.1 DOA Design Development (70%) Submission Phase for review and comment. This DOA submittal will be made at the same time as the 70% TSA Design Deliverables Submitted.

8.6.2 DOA Construction Document (95%) Submission Phase for review and comment. This DOA submittal will be made at the same time as the 100% TSA Design Deliverables Submitted.

8.6.3 DOA Construction Document (100%) Phase (Corrected Final). This DOA submittal will be made at the same time as the 100% TSA Design Deliverables Approved.

8.6.4 DOA Final Construction Drawings and Specifications (100%) Submission Phase, signed and sealed, (Georgia registered Professional Engineer or Architect seal required for all design disciplines). This DOA submittal is to be made after the Final TSA Construction Drawings and Specifications Approved. After appropriate DOA signatures these drawings and specifications will also be used by contractor to obtain the City of Atlanta building permit.

8.6.5 Design Progress Meetings and Meeting Minutes.

8.7 **DOA Design Deliverables:** The following section presents the requirements at each required phase of the design. Additional information regarding submittal and checklist requirements are detailed in the DOA Design Guidelines. A copy of the most current H-JAIA A/E Design Guidelines is available at internet website http://apps.atlantaairport.com/engineeringguidelines/elements.asp?submod=main&type_id=1. For each submission phase, the Designer of Record shall provide information and design criteria from each discipline indicated on a deliverables checklist. Since the Ricondo Design Team already completed the Schematic Design Phase the design/build contractor will only be required to follow the DOA Design Guideline requirements for the Design Development Phase and the Construction Document Phase.

8.7.1 **DOA 70% Design Development Phase**

The purpose of this submittal is to define and describe all important aspects, so that all that remains is the formal documentation of details for the construction contract document. The Designer shall provide 70% Design Development documents that illustrate and describe all components of the project. Components include major design decisions, systems, form, size, quantity, materials and quality.

8.7.1.1 General Development Deliverables include:

8.7.1.1.1 The Designer's Letter of Transmittal shall include all the identifying data necessary to differentiate the covered submittal from all others, so that adequate tracking of status may be performed

8.7.1.1.2 Certification that the Architect or Engineer Designer of Record has coordinated his/her deliverables with those of

the Lead Design Professional and the other disciplines involved in the project

8.7.1.1.3 Certification of compliance with Design Criteria, and schedule requirements

8.7.1.1.4 Update Design Schedule

8.7.1.1.5 Detail Project Construction Phasing Plan

8.7.1.1.6 Updated Construction Schedule including phasing

8.7.1.1.7 Provide 70% estimate of construction costs

8.7.1.1.8 Necessary Calculations that support the design

8.7.1.1.9 Drawings necessary to communicate a clear coordinated description of all aspects of the design. These drawings shall include appropriate electrical, mechanical, structural and architectural items at the 70% design level.

8.7.1.1.10 Specifications necessary to communicate a clear description of all aspects of the design.

8.8.1.1.11 Completed Deliverables Checklist for each design discipline and written justification for any missing deliverables, as required under the Design Documents Phase. Refer to the DOA A/E Design Guidelines, Deliverables Checklist located on the internet at http://apps.atlantaairport.com/engineeringguidelines/elements.asp?submod=main&type_id=1.

8.7.1.1.12 Confirmation that any and all review comments, pertaining to the design phases, are incorporated.

8.7.1.1.13 Formal responses to the design phases submittal comments including input compiled from each discipline.

8.7.1.1.14 Electronic files of all deliverable items in their native language/format. (Word 2010 and AutoCAD Release 2012 or later version).

8.7.1.1.15 Notice to Proceed. DOA approval of the 70% Design Development Phase must be obtained prior to the DOA

P&D Project Manager issuing the Notice To Proceed for the 95% Construction Document Phase. The 70% Design Phase is complete upon approval from the DOA and incorporation and/or resolution of all review comments. The approved schedule will include the agreed upon timeframe for the DOA to reach closure to the comments.

8.7.1.1.16 Refer to H-JAIA A/E Design Guidelines Administrative Procedures for additional details and requirements not listed above.

8.7.1.1.17 Refinement of the Description of Operations.

8.8.1.1.18 Conveyor Manifest

8.7.2 **DOA 95% Construction Document Phase**

This submittal shall comprise completed construction contract documents, satisfying all previous review comments and suitable for bidding and construction. Final quality control elements performed by the Design/Build Contractor's Quality Control organization, such as inter-discipline coordination, peer reviews and document and calculation checking, have been completed and incorporated. Any work remaining at this phase should be only minor corrections to resolve discrepancies discovered during the final review. Necessary calculations and studies shall be stamped by a State of Georgia Registered Professional Engineer or Architect. Refer to H-JAIA A/E Design Guidelines at internet website http://apps.atlantaairport.com/engineeringguidelines/elements.asp?submod=main&type_id=1 for additional details and requirements not listed below.

8.7.2.1 General Deliverables include:

8.7.2.1.1 The DESIGNER'S Letter of Transmittal.

8.7.2.1.2 Certification that the Lead Design Professional in each discipline has coordinated the deliverables with those of the other disciplines involved in the project.

8.7.2.1.3 Certification of compliance with Design Criteria, and schedule requirements.

8.7.2.1.4 Completed Deliverables Checklist for each design discipline and written justification for any missing deliverables, as required under the Construction Document (95%) phase.

8.7.2.1.5 Confirmation that any and all review comments, pertaining to the technical specifications and drawings from the 70% Design Phase, are incorporated.

8.7.2.1.6 In-progress and final review construction documents.

8.7.2.1.7 Construction Cost Estimate.

8.7.2.1.8 Updated Design Schedule

8.7.2.1.9 Detail Project Construction Phasing plan

8.7.2.1.10 Updated Construction Schedule including phasing

8.7.2.1.11 Confirmation of Quality Control Review.

8.7.2.1.12 Electronic files of all deliverable items in their native language/format. (Word 2010 and AutoCAD Release 2012 or later version).

8.7.2.1.13 Refinement of the Description of Operations.

8.7.1.1.14 Conveyor Manifest.

8.7.3 **DOA 100% CONSTRUCTION DOCUMENT PHASE (Corrected Final)**

This submittal shall comprise of all documents and all outstanding actions which include incorporation of all review comments by the 100% Construction Document review.

8.8 **Construction Phase, Designer of Record Services:** The Designer of Record (DOR) shall provide all services for performance of the following tasks below.

8.8.1 Approve shop drawings, submittals, certificates, schedules, and results of quality control tests. After Designer of Record approves, the DOR is to provide six copies of all DOR approvals to the Department of Aviation (DOA) ENGINEER for DOA approval.

8.8.2 Evaluate and provide written response to all Requests For Information (RFIs) from the contractor. After Designer of Record approves, the DOR is to provide six copies to the DOA ENGINEER for DOA approval.

8.8.3 Appropriate Design Team Disciplines shall participate with the DOA ENGINEER in critical inspections to evaluate contractor's compliance with design documents.

8.8.4 Record deficiencies during final inspection and provide Punch List to DOA ENGINEER.

8.8.5 Provide written certification to the DOA ENGINEER that the project was completed in compliance with design documents and is ready for final acceptance.

8.8.6 Transfer As-Built information to Record CADD drawings. Furnish record drawings and specifications as follows: Four full size sets of prints, four half size sets of prints, and four sets of CDs.

9.0 CONSTRUCTION SERVICES

9.1 Construction services shall be provided upon approval of the final construction documents.

9.2 Except as specified elsewhere in the Contract, CONTRACTOR shall furnish all procurement; labor; materials; tools; supplies; equipment; transportation; supervision; technical, professional and other services; and shall perform all operations necessary and required to satisfactorily construct and deliver this project as required by this Contract. This includes any modifications to the existing base building systems.

9.3 Typical construction vehicle access to the project site will be through Gate 59 (or future Gate 70). See Attachment 1 for ingress/egress route. In order to pass through Gate 59, prior permitting must occur and only tools/materials directly associated with each contractor's/subcontractor's work will be allowed through Gate 59. Only with prior written approval, large equipment and material items may enter the worksite through the roll-up doors located in the north wall of the HBS building via the north lower roadway.

9.4 Upon completion of construction, Contractor shall submit 2 full size and 1 half size drawing sets, and 4 CDs in AutoCAD Release 2012 (*.dwg. files) and PFD files of CONFORMED FOR RECORDS set of drawings.

10.0 SENSITIVE SECURITY INFORMATION

The Department of Homeland Security and the Transportation Security Administration (TSA) oversees this EDS Recapitalization and Optimization project. Some of the information pertaining to this project is classified as Sensitive Security Information (SSI) by the Department of Homeland Security/Transportation Security Administration. The use and handling of any Sensitive Security Information by everyone associated with this project must follow all TSA required procedures for the storing, using and destroying of this information.

11.0 MISCELLANEOUS

11.1 Special Reporting: The DOA is required to file monthly reports by the 10th of each month with the TSA as a condition of the TSA Other Transaction Agreement (OTA). The Design/Build Contractor shall supply the following information in electronic format to the DOA no later than close of business of the second day of the month. If the second day of the month is a Sunday the Design/Build Contractor shall supply information to DOA no later than close of business on the third day of month. The information supplied by Design/Build Contractor shall include (a) list of design and construction items completed in past month, (b) updated pdf of Primavera P6 schedule, (c) updated list of key project issues, and d) updated TSA Appendix C Design and Construction Services Milestones for each CBIS area. Failure of the Design/Build Contractor to provide the information listed above by monthly deadline will result in the pay application request approval and payment being delayed.

11.2 Construction Work Hours: The contractor will be limited to construction work during hours of the day that are acceptable to TSA and the DOA. Most of the anticipated construction is expected to occur at night except for specific instances that TSA and the DOA approve day work. Typical work hours each night will result in 4 to 5 hours of availability of the CBIS area for the contractor to work. The window of work opportunity may be affected by IROPs and Flight Schedule fluctuations.

11.2.1 Intrusive and Non-Intrusive work:

11.2.1.1 "Intrusive Work" is for work effecting operational TSA certified baggage lines. "Intrusive Work" can only be done when the TSA CBIS operations are not occurring. This daily work period is usually at night and is generally for the 4 to 5 hours as noted above.

11.2.1.2 "Nonintrusive Work" is for work on non-operational pre TSA certified CBIS baggage lines. Additional "Nonintrusive Work" work hours beyond the normal nightly 4 to 5 hours will be allowed if approved by the TSA and DOA. The DOA will coordinate with TSA to obtain as many additional "Nonintrusive Work" work hours as possible.

11.2.2 This contract requires that coordination with all stakeholders will ensure that reduction of Baggage Screening capacity is minimized during the following periods: Christmas/New Year's Holiday December 20th +/- through January 5th+/-, Thanksgiving Week, and the designated week of 'Spring Break' as determined by the airlines effect the work in each area during these time periods. In addition to these holiday periods there may also be some special event periods. The DOA will coordinate closely with the TSA and airlines to minimize these limited work days or no construction work days.

11.2.3 The number of calendar days listed for substantial completion takes into account that there are a limited number of times during the year that certain construction activities cannot take place or are limited due to higher passenger baggage inspection demand in the CBIS area. The DOA will coordinate with the TSA and airlines to minimize these limited work days or no construction work days. The contractor will not be granted additional contractual work days to complete their work due to these work restrictions as long as the restricted work days do not exceed 60 days in any 12 month period.

11.3 **Single Vendor systems:** There are a few existing systems within the CBIS areas that can only be modified by the DOA required and approved vendor. The contractor must use and pay the DOA approved vendor to do all work on these systems. The list of single system vendors that must be used includes, but is not limited to work on the CCTV system, door entry keypads or work on the HVAC controls. A single vendor systems line item allowance has been established in this contract for the design/build contractor to be reimbursed for paying for these DOA required and approved vendors to do their work.

11.4 **Coordination with TSA contractors:** The TSA will be employing a contractor that will be providing services for the removal of existing EDS machines, supplying the new CTX 9800 EDS machines and the installation of the new EDS machines. The design/build contractor will need to coordinate with TSA contractor for this

work. The design/build contractor will also need to coordinate with TSA's contractor Battelle and the DOA for required CBIS certification testing.

11.5 **Construction Work Areas:** Work areas will be within the AOA (Airport Operations Area) and the US Customs area. All requirements for working within an AOA and US Customs area must be met.

11.6 **Restoration of existing facility to condition prior to construction:** The Design/Build Contractor is responsible for repairing all surfaces and equipment in the existing facility that is altered or damaged during construction, to a condition that is the same as found prior to construction or to a condition the DOA deems as safe and satisfactory.

11.7 **Floor Patching:** The Design/Build Contractor shall patch any floor area that because of conveyor or other equipment removal has resulted in chipping, spalling or creation of a divot. Patching material should be a single component, polymer-reinforced, high-strength, cement-based patching and resurfacing mortar. Surface preparation must comply with manufacturer's recommendations. Anchor bolts may be cut sheer with floor slab with no patching required if no surrounding concrete damage is visible. Bolt must be flush with floor and create no trip hazard.

11.8 **Floor Sealant:** The Design/Build Contractor shall prepare and seal the floor surface of the South Terminal CBIS. The Sealant shall be a water-based, low VOC, acrylic copolymer solution that dustproofs concrete without yellowing. Compound shall comply with ASTM C 309.

11.9 **LED Lighting**: The Design/Build Contractor shall install LED light fixtures adjacent to new locations of the EDS machines. Install eight (8) fixtures in the North Terminal CBIS. Exact locations to be coordinated with Owner prior to installation. These lights shall be designed to produce sufficient light intensity to facilitate maintenance of each EDS machine.

11.10 **Temporary Contingency Planning:** The Design/Build Contractor shall be responsible for coordinating with and assisting the DOA in preparation of temporary contingency plans for each phase of construction, including attending contingency meetings with DOA and airlines and producing documents to define and illustrate any work-arounds necessary to facilitate these plans.

11.11 Upper level controls for entire HBS must be upgraded including hardware and software. Baggage sortation system is integrated into the HBS system and must be upgraded together as a whole system upgrade.

11.12 Provide 1 (one) laptop per system capable of running all necessary software to maintain and modify the upper and lower level controls. Include all necessary hardware and software to communicate with the system. Each laptop shall have software used to maintain, troubleshoot, and modify upper and lower level code. Include all licenses and backup of final project programming computer code.

11.13 **Phasing Plans**: A detailed project phasing concept shall be developed by the Contractor and submitted to the DOA for coordination and approval by the DOA and the TSA. The City supplied Ricondo/CAGE preliminary phasing plans may be utilized and/or incorporated as appropriate into this process.

11.14 **Cage Specifications Addendum:** In the Supplemental documents B05 make the following changes.

Item 1.3.B.7 - Add Max Recirculation bag arrival status to list.
Item 2.1.A - Change to "Only use pre-qualified BHS Contractor per RFQ".
Item 2.1.B - Match existing, if not available submit for substitution from following list.
Item 2.2.I.2.a - Match existing paint.
Item 2.4.E.1 - Request list of additional reports from airline stakeholders.

11.15 Coordinate through the DOA Project Manager the BSM (Baggage Sortation Message) requirements of the airline stakeholders.

11.16 EDS and OSR (On-Screen Resolution) Network must be upgraded per TSA PGDS STIP Requirements for Checked Baggage Systems to support the new CTX 9800 machines.

12.0 Project Organization:

12.1 A project organizational chart to show the Design/Build Contractor how the day to day management of project is structured is attached as Attachment 2.

12.2 During the design phase of the project, the Design/Build Contractor will report directly to and receive instruction only from the DOA project manager (DOA PM). The Design/Build Contractor will also direct matters related to the final closeout of the project to the DOA PM.

12.3 During construction the Design/Build Contractor will report directly to and receive instruction only from the DOA Construction Manager (CM). The CM will report to and confer with the DOA PM on the project construction.

12.4 The DOA PM will have a support team to assist with the project. The support team will include DOA support staff, ATL airport stakeholders and DOA

consultants. The DOA support staff will include, but not be limited to, DOA engineering, estimating, security, accounting, legal, procurement, airport upper management and others. The ATL stakeholders will include, but not be limited to, airlines, FAA, AATC, Airside Operations, Airport Security, TBI and others. The DOA consultants will include any necessary consultants that the DOA may need to support the technical review and management of this project.

12.5 The DOA PM or his/her designee shall be the only source of contact and transmittal of all information to the TSA. Any Contractor contact with the TSA in any form shall only occur after the Contractor receives written pre-approval by the DOA PM.

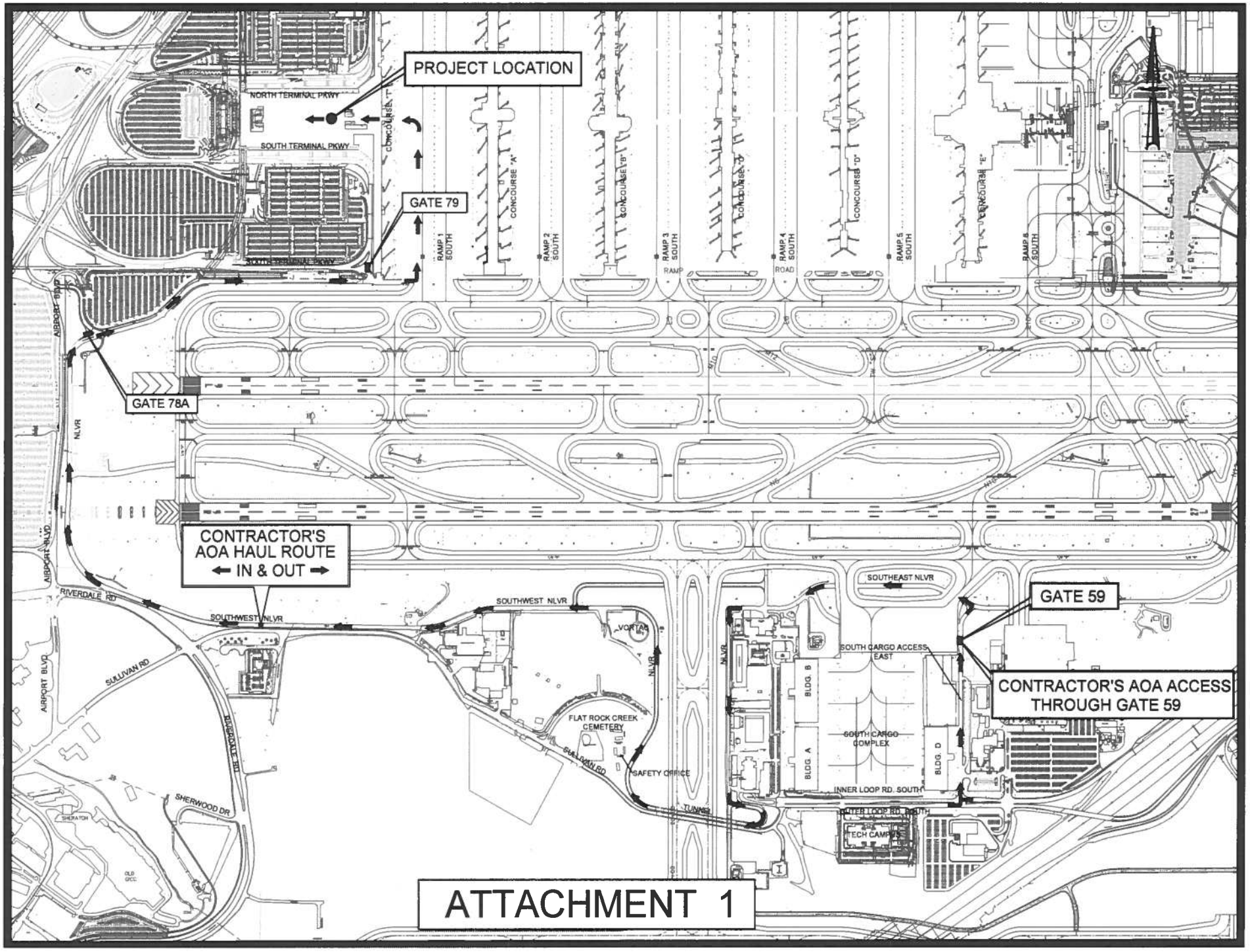

ATTACHMENT 1

ATTACHMENT 2

Project Organizational Chart

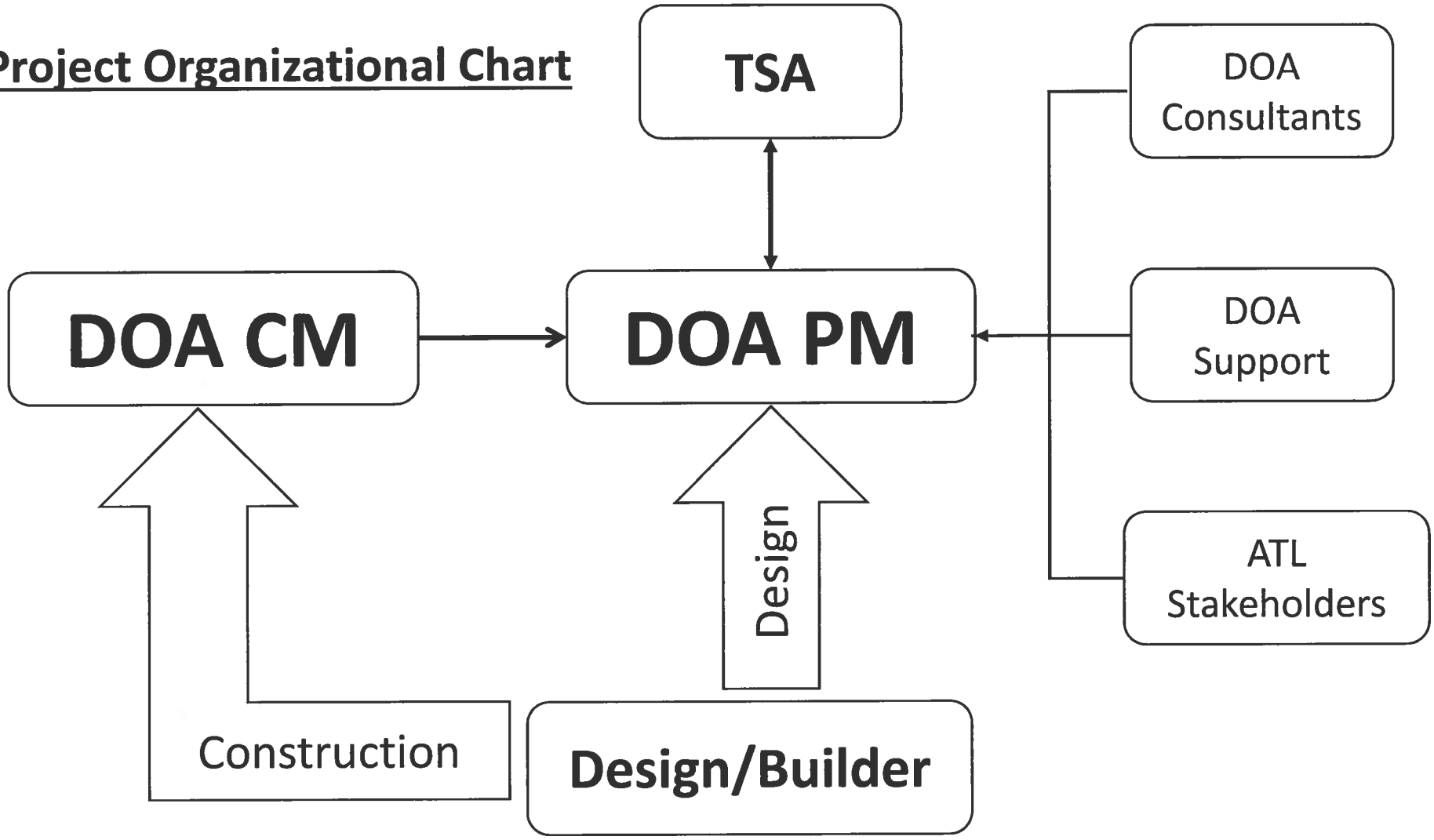

EXHIBIT C-2

OTHER TRANSACTION AGREEMENTS

OTHER TRANSACTION AGREEMENT

BETWEEN

DEPARTMENT OF HOMELAND SECURITY
TRANSPORTATION SECURITY ADMINISTRATION

AND

CITY OF ATLANTA
RELATING TO

HARTSFIELD-JACKSON ATLANTA INTERNATIONAL AIRPORT

Checked Baggage Recapitalization Screening Design Services Project

---

Negotiated by the TSA pursuant to
Aviation and Transportation Security Act, Pub. L. 107-71, 115 Stat. 597
49 U.S.C. §114(m)(1) and 106(l)(6) and

HSTS04-13-H-CT1043

ARTICLE I – PARTIES

The parties to this Other Transaction Agreement (OTA or Agreement) are the U.S. Department of Homeland Security, Transportation Security Administration (TSA) and the CITY OF ATLANTA, *referred to herein as "CITY"*, in the role of owner and operator of the HARTSFIELD-JACKSON ATLANTA INTERNATIONAL AIRPORT, *referred to herein as* "AIRPORT". The TSA and the CITY agree to cooperate in good faith and to perform their respective obligations in executing the purpose of this Agreement.

ARTICLE II – LEGAL AUTHORITY

This Agreement is entered into under the authority of the Aviation and Transportation Security Act, Pub. L. 107-71, 115 Stat. 597, specifically 49 U.S.C. § 114(m)(1) and 106(l)(6), which authorizes other transactions.

ARTICLE III – SCOPE

Objectives

The purpose of this Agreement is to set forth the terms and conditions, as well as establish the respective cost-sharing obligations of the TSA and the CITY, with respect to the design services necessary to implement the TSA Recapitalization effort at HARTSFIELD-JACKSON ATLANTA INTERNATIONAL AIRPORT. The design services will result in 100% drawings and specifications for the Recapitalization project. TSA reviews the 100% drawings and specifications for compliance with the TSA Planning Design Guidelines and Design Standards (PGDS) Version 4.1.
http://www.tsa.gov/research-center/airport-checked-baggage-guidance-materials

The CITY will be responsible for developing various cost-effective solutions to replace the aging Explosive Detection System (EDS) machines currently deployed at the AIRPORT, while minimizing the impact to operations and reducing the number of EDS by using higher throughput technology units (as appropriate). These solutions will be offered by establishing a current and future baggage screening rate to allow TSA to consider the optimum solution and act utilizing all cost factors from the analysis.

Background

The Electronic Baggage Screening Program (EBSP) of the Transportation Security Administration monitors the status of its existing EDS equipment to ensure compliance, functionality, and efficiency. The TSA Headquarters keeps the following detailed, historical records relating to each EDS machine: age, maintenance logs, performance (rate), technical obsolescence, and local TSA reported issues, among others. When triggered by one or more of these factors, an examination of the system becomes warranted and TSA develops a modification plan to correct any outstanding conditions. The TSA has established the Recapitalization Program to address these needs.

- **Recapitalization** is the replacement of EDS equipment that has reached the end of its useful life. Typically, such EDS machines will be replaced with a newer model of

EDS machine that has similar throughput and capabilities. The EDS replacement may include some minor modifications to the existing conveyor shunts and Programmable Logic Controllers (PLC) programming to foster the EDS machine placement and operation. NOTE: Baggage Handling System (BHS) modifications that extend beyond the scope of work of this design OTA are classified as "Optimization".

Typically, the aging CTX 9000 EDS machine (400 bph) will be replaced with an MDI 9800 EDS machine (680 bph); and the aging L3 6600 (400 bph) will be replaced with the L3 6700 (540 bph) or the L3 6700ES (680 bph). Although these are typical plans, TSA reserves the right to determine the model of EDS machine(s) to be used in a recapitalization project at an airport. The differences in processing capabilities – when applied to the future needs of the airport - may provide for a "Return on the Investment" (ROI) when the quantity of required EDS is reduced. When applicable, the ROI for the Recapitalization process, which is to be calculated based on a 10 year period, shall be specifically identified by the CITY.

Project Summary

Deliverables:

1) Establish and provide to TSA the current baggage rates in accordance with the PGDS 4.1, Chapter 5. The baggage rate analysis must be for the current year (2013), and forecast the baggage rate (or volume) 6 years into the future (through 2019). The quantity of EDS machines as a result of Recapitalization will be based on the future demand, which is based on the baggage rate analysis. The report shall include information (graphs, charts, tables, figures, diagrams, etc) about the steps and calculations performed (see PGDS Chapter 5).
2) Provide a report containing a minimum of two solutions (including a cost estimate formatted to the CWE in Appendix F of PGDS 4.1) that reflects the most cost efficient solution to recapitalize the EDS units. The solutions shall take into account the available speed EDS machine options and the costs associated with the following elements:
    a. EDS price
    b. EDS maintenance
    c. Phasing required to install the new EDS units
    d. Necessary modifications to the Baggage Handling System (BHS) (e.g. egress, quick disconnect, accommodations for new EDS machines)
3) The report shall include a cost/benefits analysis comparison, advantages and disadvantages for each solution, and a suggestion as to the best solution proposed. Provide documentation of airport/airline configuration changes that will affect the current and future baggage rates (additional gates, airline moves, additional flights, etc). This documentation shall also include the AIRPORT master plan, when available.
4) Identify and provide a required statement of work, whenever minor BHS changes are necessary to accommodate the replacement EDS machines. By providing this statement of work, the CITY is not entitled to reimbursement of the costs of such work unless allowed for in a separate OTA or other agreement with TSA.
5) If major BHS system modifications are needed, the CITY shall provide a scope of work with a solution to support the increased baggage rate requirement (see "Constraints", paragraph 4). By providing this statement of work, the CITY is not entitled to reimbursement of the costs of such work unless allowed for in a separate OTA or other agreement with TSA.

Constraints:

A) The CITY must comply with the following rules and regulations governing the deliverables to be provided in support of the TSA Recapitalization Program:

1) Reports shall contain ALL supporting documentation. This documentation includes, but is not limited to: flight schedules, airport master plan, arrival distributions applied, equipment demand calculations, cost analysis tools, among others. The TSA reserves the right to request any additional information that is not provided along with the deliverables listed in this section.
2) PGDS where applicable.
3) Contact TSA to obtain the available historical data of the airport in study. The historical data includes:
   - Monthly total passengers per checkpoint
   - Daily total passengers per checkpoint
   - Hourly total passenger per hour
   - Bag information reports (a.k.a. FDRS reports) for all the EDS for the ADPM
   - Bags per passengers for each airline
   - Enhanced Staffing Model results and reports
4) If the existing BHS is unable to sustain the future expected baggage rate, as predicated by EDS machine replacement alone, the system may not be a viable candidate for the Recapitalization effort. If this is the case, please contact the TSA Regional Deployment Coordinator (RDC).
5) If the Field Data Reporting System (FDRS) reports are available and can be provided by the TSA, the CITY shall use this data to establish the baggage rate demands and contrast it with the flight schedule analysis.
6) When possible, the replacement EDS units shall be of the same type as the existing EDS equipment that is currently deployed at the airport, to eliminate an unnecessary need for a new network system, and any other unnecessary modifications to the system.
7) The CITY shall examine the existing BHS's status and ensure that the conveyor system is capable of supporting the new EDS rate, independently and as a system. (The intent is that the EDS machines can be fully utilized at their rated capacity). Redundant EDS machines – as per the PGDS – are to be an integral requirement. If major BHS modifications are needed, and only with the RDM's approval, the CITY may produce a scope of work with a solution to support the increased rate requirements. By providing a scope of work, the CITY is not entitled to reimbursement of the costs of such work unless allowed for in a separate OTA or other agreement with TSA.

In both solutions provided pursuant to this OTA, the CITY shall identify the removal path for the EDS machines, include special requirements, and/or identify limitations or constraints.

This OTA requires the CITY to provide the architect and engineering services to develop the design and construction specifications to complete the Recapitalization project. The TSA

detailed design deliverables for each Design Phase to be provided by the CITY are outlined per Appendix A of this Agreement. The Design Phases include:

1. Pre-Design Phase: Preliminary Alternative Analysis Report and Preferred Analysis Report
2. Schematic Design Phase: Basis of Design Report and associated deliverables
3. Detailed Design Phase
    a. 30 % Design Submittals and associated deliverables
    b. 70% Design Submittals and associated deliverables
    c. 100% Design Submittals and associated deliverables
4. Construction Bid proposal documentation to include contract solicitation, requirements issued to prospective contractors, bid specifications and other applicable documents that complete the local request for proposal package listed at the CITY's public point of entry.
5. Construction Bid proposal evaluation.

Any future allowable, allocable and reasonable costs for Recapitalization Project construction, project management, construction management, and commissioning/site acceptance testing is anticipated to be funded through a separate Agreement or OTA modification in accordance with Article XIII "Changes and/or Modifications" between the CITY and the TSA. This OTA shall not be construed to obligate the TSA, in any manner, to provide construction cost funding or obligate the TSA to enter into an Agreement with the CITY for reimbursement of construction costs related to the Recapitalization Project. TSA funding for the construction portion of the project is subject to the Congressional authorization and appropriation budget process.

ARTICLE IV – COST SHARING AND OTHER RESPONSIBILITIES

1. Capital Costs: The estimated cost of the Design Project refers to the design services to be completed by the CITY to develop the necessary design documents for the construction modifications needing to be made to the Terminal building and associated baggage conveyor system to support the Recapitalization Project. It does not include the costs of acquisition, delivery or installation of the EDS equipment itself. All work performed by the CITY pursuant to this Agreement shall be accomplished in accordance with the TSA PGDS 4.1 is executed and in accordance with the applicable local CITY Building Standards and Criteria. Recognizing the uniqueness of this Design Project, in the event of any conflicts between the provision of the PGDS and this Agreement, the Parties agree to resolve such conflicts through the design review and Alternative Analysis processes described in the TSA PDGS.

2. The estimated cost for the design services for the Design Project is **$1,733,000**. TSA agrees to reimburse the CITY for (100%) of the allowable, allocable and reasonable costs of the design services for the Design Project, not to exceed a total reimbursement of **$1,733,000**. TSA reimburses for allowable, allocable and reasonable costs submitted by the CITY for reimbursement up to the TSA funded amount of **$1,733,000**.

3. TSA will determine allowable and allocable costs in accordance with the OMB Circular A-87 "Cost Principles for State, Local and Indian Tribal Governments" codified at 2 C.F.R. Part 225 (together with Appendices A – D) and Appendix F of the TSA PGDS in effect upon the signing of this Agreement by both parties. TSA will reimburse the CITY on an actual expense basis supported by one or more invoices submitted by the CITY in accordance with Article X –

Payment. The parties understand and agree that all design costs in excess of **$1,733,000**, as well as any costs that are inconsistent with OMB A-87 and the guidance set forth in Appendix F of the TSA PGDS 4.1, shall be borne solely by the CITY unless otherwise agreed by the TSA in a modification in accordance with Article XIII – Changes and/or Modifications. Should the TSA contributions of **$1,733,000** represent more than the total final TSA allowable, allocable, and reasonable design costs for the Design Project, the CITY will refund TSA sufficient funds such that TSA's total reimbursement will be no more than the total allowable, allocable and reasonable costs submitted by the CITY.

4. The Design Project costs which TSA will reimburse are limited specifically to those costs associated with the Design Deliverables mandated by the TSA PGDS, outlined in Appendix A "TSA PGDS Design Deliverables Checklist."

5. Change orders shall not be considered authorization to exceed TSA's reimbursement limit of $1,733,000 for the Design Project, unless the TSA Deployment Manager and TSA Contracting Officer have been notified in advance of the impact the Change Order has on the total cost of the design services for the Design Project, and TSA provides its written approval to proceed with the work identified in the Change Order. Use of contingency funds for the TSA Design Project requires TSA's prior written approval.

ARTICLE V: PROJECT RESPONSIBILITIES

The primary Project responsibilities of the TSA and the CITY are outlined below. The Design Project will be overseen by the CITY.

A. TSA Responsibilities

1. Review and concur with the Recapitalization Project design, plans, and specifications for alternative analysis, schematic, 30%, 70% and 100% design packages for the installation of the replacement EDS units in the CBIS based upon the recommendations and guidelines in the TSA PGDS in effect at the time of execution of this Agreement.
2. The CITY must receive concurrence from TSA at each stage of the design review in order to proceed to the next design review stage.
3. Consider design alternatives during the design review process in order to achieve the most efficient screening solution for both TSA and the CITY.
4. Provide the applicable version of the TSA PGDS as well as the EDS equipment specification(s) as required.
5. Advise the type of EDS equipment to be provided at each stage of the design.
6. Provide EDS Original Equipment Manufacturer Technical Advisory Support Services to the CITY regarding integration of the EDS units into the baggage handling system (BHS).
7. Review and consider requested changes to the design and associated costs.

B. CITY Responsibilities

1. Except for the responsibilities of the TSA, as outlined above, the Design Project will be managed and overseen by the CITY. The CITY, acting through such contractors as

it may engage, will provide the engineering and design services necessary for successful completion of the Design Project. The CITY will provide oversight of such contractor(s) to ensure the design of the Recapitalization Project conforms to the TSA design guidelines identified in the PGDS and is completed within the project milestone schedule.

2. The CITY must receive concurrence from TSA at each stage of the design review in order to proceed to the next design review stage.
3. Provide a budgetary construction cost estimate with the schematic, 30% design review and subsequent 70% and 100% design reviews for the Recapitalization Project.
4. Obtain all necessary licenses, insurance permits and approvals.
5. Ensure the EDS OEM site planning, installation, integration and networking guidelines are incorporated into the design to ensure operational, maintenance and environmental specifications are met.
6. As part of the design, provide reasonable measures to protect the EDS and ETD equipment from harm, theft, and water intrusion in the screening area.
7. Incorporate heating, ventilation, air conditioning into the design as well as OSHA requirements for those spaces occupied by TSA personnel.
8. Submit monthly progress reports by the 10th of each month to the TSA Deployment Manager via e-mail at OSTCBD@tsa.dhs.gov

ARTICLE VI - EFFECTIVE DATE AND TERM

The period of performance for this Agreement is effective on the date signed by TSA and ends on unless earlier terminated by the parties pursuant to Article XV "Termination" as provided herein or extended by mutual written agreement pursuant to Article XIII "Changes and/or Modifications." The period of performance allows the CITY time to submit a final invoice, close out the Design Project, and address any other issues.

The CITY will establish and provide Design Schedule Milestones to the TSA that allow objective measurement of progress toward completion. Design Schedule Milestones will be provided to the TSA within 30 days after the CITY has established their design services contract(s). TSA maintains the right to identify any additional milestones to be tracked.

ARTICLE VII - ACCEPTANCE AND TESTING

TSA will deem the Design Project complete upon review and concurrence of the 100% design package for each Terminal. The design must conform to the TSA PGDS 4.1.

ARTICLE VIII - AUTHORIZED REPRESENTATIVES

The authorized representative for each party shall act on behalf of that party for all matters related to this Agreement. Each party's authorized representative may appoint one or more personnel to act as an authorized representative for any administrative purpose related to this Agreement, provided written notice of such appointments is made to the other party to this Agreement. The authorized representatives for the parties are as follows:

A. <u>TSA Points of Contact:</u>
Regional Deployment Coordinator/Contracting Officer's Representative:

John Reed
Mail Stop TSIF #32
Transportation Security Administration
1 Post Office Road
Washington, DC 20528-6032
Phone: 571-227-1563
E-Mail: john.reed1@dhs.gov

Contracting Officer:
Matthew Ashurst
Transportation Security Administration
Office of Acquisition
701 South 12th Street
Arlington, Va. 20598
Phone: 571-227-5376
E-Mail: matthew.ashurst@dhs.gov

Only the TSA Contracting Officer (CO) shall have the authority to bind the Federal government with respect to funding and liability. The TSA Regional Deployment Coordinator (RDC) is also the TSA Contracting Officer Representative (COR) and is responsible for the technical administration of this Agreement and technical liaison with the CITY. The TSA COR is not authorized to change the scope of work, to make any commitment or otherwise obligate the TSA, or authorize any changes that affect the liability of the TSA such as amount or level of funding.

The CITY must notify the TSA CO and COR in the event that any TSA employee or TSA contracted agent takes any action that may be interpreted by the CITY as direction which could increase the Design Project costs and could cause the CITY to seek reimbursement from TSA in excess of the of the TSA's total reimbursement liability as defined in Articles IV and IX of this Agreement.

B. CITY Points of Contact:

The CITY Point of Contact for all correspondence is:

James L. Drinkard, P.E.
Assistant General Manager – Planning and Development
City of Atlanta/Department of Aviation
1255 South Loop Road
College Park, Georgia 30337
Jim.drinkard@atlanta-airport.com

ARTICLE IX - FUNDING AND LIMITATIONS

TSA will provide funding to the CITY in an amount not to exceed **$1,733,000**. Funds in the amount of **$1,733,000** are hereby obligated and made available for payment for performance of this Agreement. Expenses incurred in executing the work identified herein are chargeable to:

PR: 2113203CT1043

Accounting Code: 5CF09XB010D2013SWE044GE013723006200622CTO-5903001101010000-251B-TSA

Amount: $1,733,000

In the event of termination or expiration of this Agreement, any TSA funds that have not been spent or incurred for allowable expenses prior to the date of termination and are not reasonably necessary to cover termination expenses will be returned and/or de-obligated from this Agreement. TSA's liability to make payments to the CITY is strictly limited to the amount of funds obligated and available for payment hereunder, including written modifications to this Agreement.

Under no circumstances will TSA be responsible to reimburse the CITY for profit or the general costs of government. The CITY may recover the allowable direct costs of the CITY personnel performing work necessary under this Agreement, as well as the allowable and allocable costs of the contractors hired by the CITY to perform the necessary work under this Agreement. Profit and overhead costs for the CITY's contractors performing work on the Recapitalization Project are allowable costs. Submission of a cost allocation plan is required to address any indirect costs, to include CITY employees, who work on multiple activities that will result in a request for reimbursement under this Agreement. TSA will not be responsible for costs incurred by the CITY, its contractors or agents to perform work not in compliance with the TSA requirements in this Agreement. The TSA has the right to recoup any payments made to the CITY if the TSA Contracting Officer determines that the invoices submitted by the CITY exceed the actual costs incurred, or if the work substantially deviates from the TSA-approved design requirements for the Project pursuant to this Agreement.

TSA will reimburse only for allowable, allocable and reasonable costs in accordance with the OMB Circular No. A-87 in effect on the Effective Date of the Agreement (codified at 2 C.F.R. Part 225) and the allowable/not-allowable costs identified in the TSA PGDS **4.1**.

ARTICLE X – PAYMENT

The United States Coast Guard Finance Center performs the payment function on behalf of the TSA. For purposes of submission to the Coast Guard Finance Center, the CITY must submit a completed Summary Invoice. Registration in the System for Award Management (SAM) is mandatory for invoice payment; for information regarding SAM, please refer to https://www.sam.gov/portal/public/SAM/.

Invoices for reimbursable expenses will be submitted every thirty (30) days, as expenses are incurred. For periods in which the CITY has not incurred a reimbursable expense, an invoice is not required. Expenses are considered to accrue on the date that the CITY is invoiced from a sub-contractor, supplier, or provider of services. Reimbursement by TSA is conditioned upon submission to TSA of an invoice identifying the Project costs that have been incurred and paid. The TSA intends to make payment to the CITY within 120 days of receipt of each properly prepared invoice for reimbursement of incurred costs.

In the event that an invoice for reimbursable expenses is not received by the TSA within a twelve (12) month period, the TSA reserves the right to terminate the Agreement per Article XV "Termination."

The TSA reimbursement process consists of two steps.

Step 1 – Summary Invoice Submittal to the U.S. Coast Guard Finance Center for Payment, and at a minimum should contain the following information:

(1) Agreement Number
(2) Invoice Number and Invoice Date
(3) Complete Business Name and Remittance Address
(4) Point of Contact with address, telephone, fax and e-mail address
(5) Tax Identification Number and DUN's Number
(6) Dollar Amount of Reimbursement requested
(7) Signature of the CITY's authorized representative and the following certification language: *"This is to certify that the services set forth herein were performed during the period stated and that the incurred costs billed were actually expended for the Project."*

The Summary Invoice may be submitted by standard email or by electronic transmission to the following address(s):

Mailing Address: TSA Commercial Invoices
USCG Finance Center
P.O. Box 4111
Chesapeake, VA 23327

Email: FIN-SMB-TSAINVOICES@uscg.mil

Step 2 – Submission of Summary Invoice and Supporting Documentation Submittal to TSA for Approval of Payment:

The TSA CO and the COR are required to review and approve all invoices prior to payment. To aid in this review, the CITY shall provide a copy of the Summary Invoice along with all receipts, contractor pay requests and other supporting information which specify the vendor, services provided, and products delivered as well as the appropriate identifications that the CITY has paid these obligations. The CITY should provide this supporting information simultaneously with Step 1 to expedite the payment process.

The Support Documentation should contain the following items:

- Summary Invoice from Step 1
- An executive summary project overview with the first invoice
- A summary spreadsheet providing a categorized breakdown of the amount invoiced.
- Signed, approved and legible copies of each individual contractor's invoice to include schedules of values statements of work.
  - Copies of contracts and change orders that provide support for the actual work being invoiced

  - Vendor and subcontractor invoices with specific details about services provided
  - Rationale for all allocations or unusual calculations or assumptions
  - Proof of delivery to the project sponsor
  - Copies of subcontractor's invoices if listed on a prime contractor's invoice as a single amount (copies of timesheets and detailed backup not required if descriptions are clear and specific).
- Proof of payment by the CITY for each invoice in the form of copies of check/warrants, bank wire transfers, or accounting systems transactions

The Summary Invoice and supporting documentation may be submitted by email or mail via CD or paper documents to the below addresses. The final closeout invoice should include proof that all required deliverables have been provided.

John Reed Mail Stop TSA TSIF - #32 Transportation Security Administration 1 Post Office Way Washington, D.C. 20528-6032 Email: OSTCBD@tsa.dhs.gov	Matthew Ashurst, TSA Contracting Officer C/O Mr. Henry Edquist Faithful & Gould 1725 Duke Street, Suite #200 Alexandria, VA 22314 Phone: 571-403-8777 Email: Henry.Edquist@fgould.com

Upon completion of the review of the supporting documentation for the Summary Invoice, the TSA CO and the TSA RDM/COR will advise the Coast Guard Finance Center regarding payment of the Summary Invoice.

ARTICLE XI - AUDITS

The Federal Government, including the Comptroller General of the United States, has the right to examine or audit relevant financial records for a period not to exceed three (3) years after expiration of the terms of this Agreement. The CITY's and its contractors must maintain an established accounting system that complies with generally accepted accounting principles. Records related to disputes arising out of this Agreement shall be maintained and made available until such disputes have been resolved. As used in this provision, "records" includes books, documents, accounting procedures and practices, and other data, regardless of type and regardless of whether such items are in written form, in the form of computer data, or in any other form.

The CITY shall maintain all records and other evidence sufficient to reflect costs claimed to have been incurred or anticipated to be incurred directly or indirectly in performance of this Agreement. The TSA CO or the authorized representative of the TSA CO shall have the right to examine and audit those records at any time, or from time to time. The right of examination shall include inspection at all reasonable times at the offices of the CITY or at the offices of the CITY's contractor(s) responsible for the Project. The CITY will be required to submit cost or pricing data and supporting information in connection with any invoice relating to this Agreement if requested by the TSA CO.

This Article XI shall not be construed to require the CITY or its contractors or subcontractors to create or maintain any record that they do not maintain in the ordinary course of business pursuant to a provision of law, provided that those entities maintain records which conform to generally accepted accounting practices.

The CITY shall insert a clause containing the terms of Article XI – Audits in all its contracts and subcontracts under this Agreement that exceed $100,000.00 (One Hundred Thousand Dollars).

ARTICLE XII – REQUIRED FEDERAL PROCUREMENT PROVISIONS

Competition in the award of contracts or procurements resulting from this Project is strongly encouraged and the CITY should promote competition to the maximum extent practicable.
The CITY agrees to include in its contract(s) a provision that the Airport Terminal designs for this Project are required to comply with the TSA's PGDS.

ARTICLE XIII – CHANGES AND/OR MODIFICATIONS

Changes and modifications to this Agreement shall be in writing and signed by the TSA CO and duly executed by the authorized representative of the CITY. Any modification shall cite this Agreement and shall state the exact nature of the change and/or modification. No oral statement by any person shall be interpreted as modifying or otherwise affecting the terms of this Agreement. The properly signed written modification shall be attached to this Agreement and thereby become a part of this Agreement.

ARTICLE XIV – DISPUTES

When possible, disputes will be resolved by informal discussion between the parties. All disputes arising under or related to this Agreement shall be resolved under this Article. Disputes, as used in this Agreement, mean a written demand or written assertion by one of the parties seeking, as a matter of right, the adjustment or interpretation of Agreement terms, or other relief arising under this Agreement. The dispute shall be made in writing and signed by a duly authorized representative of the CITY or the TSA. At a minimum, a dispute under this Agreement shall include a statement of facts, adequate supporting data. In the event that the parties are unable to resolve any disagreement through good faith negotiations, the dispute will be resolved by the TSA Assistant Secretary or his or her designee. The parties agree that the TSA Assistant Secretary's decision shall be final and not subject to further judicial or administrative review and shall be enforceable and binding upon the parties.

ARTICLE XV – TERMINATION

In addition to any other termination rights provided by this Agreement, either party may terminate this Agreement at any time prior to its expiration date, with or without cause, and without incurring any liability or obligation to the terminated party (other than payment of amounts due and performance of obligations accrued, in each case on or prior to the termination date) by giving the other party at least thirty (30) days prior written notice of termination. Upon receipt of a notice of termination, the receiving party shall take immediate steps to stop the accrual of any TSA additional obligations that might require payment.

In the event of termination or expiration of this Agreement, any TSA funds that have not been spent or incurred for allowable expenses prior to the date of termination and are not reasonably necessary to cover termination expenses will be returned and/or de-obligated from this Agreement.

ARTICLE XVI – CONSTRUCTION OF THE AGREEMENT

This Agreement is an "other transaction" issued under 49 U.S.C. § 106(l) and 114(m)(1) and is not a procurement contract, grant or cooperative agreement. Nothing in this Agreement shall be construed as incorporating by reference or implication any provision of Federal acquisition law or regulation. It is not intended to be, nor shall it be construed as creation of a partnership, corporation, or other business entity between the parties.

Each party acknowledges that all parties hereto participated equally in the negotiation and drafting of this Agreement and any amendments thereto, and that, accordingly, this Agreement shall not be construed more stringently against one party than against the other.

This Agreement constitutes the entire agreement between the parties with respect to the subject matter hereof and supersedes all prior agreements, understandings, negotiations and discussions, whether oral or written, of the parties.

In the event that any Article and/or parts of this Agreement are determined to be void or otherwise invalid or unenforceable, such Article or portions thereof shall lapse. No such lapse will affect the rights, responsibilities, and obligations of the parties under this Agreement, except as provided therein. If either party determines that such lapse has or may have a material effect on the performance of the Agreement, such party shall promptly notify the other party, and shall negotiate in good faith a mutually acceptable amendment to the Agreement if appropriate to address the effect of the lapse.

ARTICLE XVII - PROTECTION OF INFORMATION

The parties agree that they shall take appropriate measures to protect all proprietary, privileged, confidential, or otherwise Sensitive Security Information (SSI) that may come into their possession as a result of this Agreement.

A. RELEASE OF TECHNICAL DATA

No Sensitive Security Information (SSI), as defined in 49 CFR Parts 15 and 1520, concerning the scope of this Agreement, shall be published or released to the public without prior written approval of the TSA Assistant Secretary or his or her designee. Guidance regarding SSI may be found in Appendix G, Checked Baggage Screening Equipment Sensitive Security Information Identification Guide", of the TSA PGDS.

B. RECORDS AND RELEASE OF INFORMATION

All Sensitive Security Information (SSI), as defined in 49 CFR Part 1520, shall be handled in accordance with TSA policies and regulations. All employees, contractors, and subcontractors assigned to work under this Agreement are subject to the provisions of 49 CFR Part 1520, Protection of Sensitive Security Information, because they act for, or carry out duties for, or on behalf of the TSA. SSI may not be disclosed except in accordance with the provisions of that

rule or where TSA otherwise approves.

C. MEDIA

Neither the CITY, nor its contractors shall make publicity or public affairs activities related to the subject matter of this Agreement unless written approval has been received from the TSA Office of Security Technology or the TSA Office of Strategic Communication and Public Affairs. The purpose of this provision is to preclude the inadvertent release of SSI to the general public.

ARTICLE XVIII - SURVIVAL OF PROVISIONS

The following provision of this Agreement shall survive the termination of this Agreement: Article XII – Required Federal Procurement Provisions; Article XI – Audits; Article XIV – Disputes, Article XVII – Protection of Information and Article XVIII – Survival of Provisions.

IN WITNESS WHEREOF, the Parties have entered into this Agreement by their duly authorized officers this 13th day of March, 2013.

U. S. Department of Homeland Security
Transportation Security Administration

Matthew Ashurst
TSA Contracting Officer

03/13/13
Date

City of Atlanta

Mayor

Attest:

Rhonda Dauphin Johnson
Municipal Clerk

Approved:

for Bal B
Aviation General Manager

James L. Dahl
Assistant Aviation General Manager

Adam Smith
Chief Procurement Officer
Department of Procurement

Approved as to Form:

Kristen M. Rectenwald
City Attorney

Figure 2-4
DELIVERABLES CHECKLIST

PROJECT PHASE DELIVERABLES	SECTION	Completed Yes	Completed No
Pre-Design Phase	2.2.1		
Preliminary Alternatives Analysis Report			
Preferred Alternatives Analysis Report			
Schematic Design Phase			
Basis of Design Report	2.2.2		
Detailed Program Requirements			
High-Level Flow-Based Modeling Assumptions and Results			
Preliminary Concept Plans			
Phasing and Constructability Technical Memoranda			
ROM Estimate of Probable Construction and O&M Costs			
Stakeholder Review and Approval Documentation			
Preliminary Project Schedule			
Detailed Design Phase	2.2.2		
30% Design Submittals	2.2.3.1		
Updated Basis of Design Report			
Operational Standards Assessment			
Preliminary Plans			
Cross Sections			
Description of Operations			
Baggage and Data Flow Charts			
Table of Contents for CBIS			
Screening Equipment Installation Guidelines			
Outline of Reporting Capabilities			
Stakeholder Review and Approval Documentation			
30% Estimate of Probable Construction and O&M Costs			
Preliminary Phasing Schedule			
Conveyor Manifest			
EDS Equipment List			
70% Design Submittals	2.2.3.2		
Updated Basis of Design Report			
Updated Operational Standards Assessment			
70% Design Drawings			
Cross Sections			

PROJECT PHASE DELIVERABLES	SECTION	Completed Yes	Completed No
Detailed Design Phase (continued)			
70% Design Submittals (continued)			
Description of Operations			
Preliminary Contingency Plan			
70% Specifications			
Draft Site Specific Configuration Management Plan			
Stakeholder Review and Approval Documentation			
70% Estimate of Probable Construction and O&M Costs			
Phasing Schedule			
Conveyor Manifest			
Updated EDS Equipment List			
100% Design Submittals	2.2.3.3		
Bid Documents			
Final Description of Operations			
Contingency Plans			
Project Specifications			
Final Site Specific Configuration Management Plan			
Stakeholder Review and Approval Documentation			
Final Estimate of Probable Construction and O&M Costs			
Final Phasing Schedule			
Updated EDS Equipment List			
Operations Training Materials and Documentation			
Construction Phase	2.2.4		
Changes to Approved 100% Design Submittals			
Construction Schedule			
Courtesy Copies of Shop and Installation Drawings			
Testing and Commissioning Phase	2.2.5		
Pre-ISAT Documentation			
ISAT Documentation			
Project Closeout Phase	2.2.6		
As-built CBIS Documentation Submittal			
Final Copy of the PLC Program with Drawings			
Final Copy of Disaster Recovery Procedures			

APPENDIX B, SCHEDULE OF DELIVERALBES

The following deliverables are required to be submitted by the CITY.

Item	Submitted To:	Frequency or Due Date
Schedule to include Project Milestones (Design and proposed Construction)	TSA Deployment Manager, OSTCBD@tsa.dhs.gov and TSA Contracting Officer	Within 30 days of the AIRPORT AUTHORITY awarding the design contract. Updates submitted with monthly TSA report.
Pre-Design Phase, Schematic, 30%, 70% and 100% Design deliverables	TSA Deployment Manager, OSTCBD@tsa,dhs.gov	In accordance with the TSA PGDS Deliverables Checklist
Preferred Alternative Package	TSA Deployment Manager, OSTCBD@tsa,dhs.gov	April 2013
30% Design	TSA Deployment Manager, OSTCBD@tsa,dhs.gov	June 2013
Design Contract Schedule of Fees	TSA Deployment Manager, TSA Contracting Officer, OSTCBD@tsa.dhs.gov	Provide upon issuing Design Contract
Copies of the Design Contract(s) and Change Orders	TSA Deployment Manager, TSA Contracting Officer. OSTCBD@tsa.dhs.gov	Change Orders requiring advanced TSA approval.
Monthly Project Report	TSA Deployment Manager, OSTCBD@tsa.dhs.gov	By the 10th of each month. Electronic submission is requested.
Requests for Information or Clarification	TSA Deployment Manager	As needed
Final Invoice	TSA Deployment Manager TSA Contracting Officer, OSTCBD@tsa.dhs.gov	No later than 90 days after completion of the CBIS Construction Project.

The Monthly Project Report is to be submitted by the 10th of each month to the TSA Deployment Lead, and OSTCBD@tsa.dhs.gov and shall address the following:

- Design Schedule in both PDF and "live"/usable format to depict the critical path, baseline and actual date information; predecessors/successors. The Design Schedule will be used for all planned TSA activities.

OTHER TRANSACTION AGREEMENT

BETWEEN

DEPARTMENT OF HOMELAND SECURITY
TRANSPORTATION SECURITY ADMINISTRATION

AND

CITY OF ATLANTA

RELATING TO

HARTSFIELD-JACKSON ATLANTA INTERNATIONAL AIRPORT
Checked Baggage Recapitalization Screening Construction Services Project

---

Negotiated by the TSA pursuant to
Aviation and Transportation Security Act, Pub. L. 107-71, 115 Stat. 597
49 U.S.C. §114(m)(1) and 106(l)(6).

HSTS04-13-H-CT1141

ARTICLE I – PARTIES

The parties to this Other Transaction Agreement (OTA are the U.S. Department of Homeland Security, Transportation Security Administration (TSA) and the **CITY OF ATLANTA (CITY)** as owner and operator of **HARTSFIELD-JACKSON ATLANTA INTERNATIONAL AIRPORT (ATL** or Airport). The TSA and **CITY** agree to cooperate in good faith and to perform their respective obligations in executing the purpose of this Agreement.

ARTICLE II – LEGAL AUTHORITY

This Agreement is entered into under the authority of the Aviation and Transportation Security Act, Pub. L. 107-71, 115 Stat. 597, specifically 49 U.S.C. § 114(m)(1) and 106(l)(6), which authorizes other transaction agreements.

ARTICLE III – SCOPE

The purpose of this Agreement is to set forth the terms and conditions, as well as establish the respective cost-sharing obligations of the TSA and **CITY** with respect to the design, engineering and construction-related services necessary to implement the construction of the TSA recapitalization project design submitted by the **CITY** and reviewed by TSA pursuant to the TSA Planning Guidelines and Design Standards (PGDS) Version 4.1 found at:
http://www.tsa.gov/research-center/airport-checked-baggage-guidance-materials

This Project undertaken by **CITY** involves the modification to or construction of the Airport terminal building infrastructure to recapitalize the TSA EDS systems located within the Checked Baggage Inspection System. Terminal modifications include required changes to baggage conveyor components, mechanical, plumbing, electrical, structural, and telecommunications infrastructure to provide for the installation of Explosive Detection Equipment (EDS) within the baggage screening area, Explosive Trace Detection (ETD) equipment in the Checked Baggage Resolution areas, and the installation of applicable CBIS hardware and software for use with a checked baggage in-line baggage screening system. The objective of the Project is to enhance Airport security and baggage screening capabilities and throughput.

ARTICLE IV – COST SHARING AND OTHER RESPONSIBILITIES

1. Capital Costs: The estimated cost of the Project (Total Project Cost) relates to the activities to modify the airport terminal building infrastructure and the baggage handling system (BHS) to support the installation and operation of the EDS and ETD equipment. It does not include the costs of acquisition, delivery or installation of the EDS and ETD equipment itself. TSA will be solely responsible for the acquisition, delivery, installation, and testing of the EDS and ETD equipment at the designated Project location(s). All work performed by **CITY** pursuant to this Agreement shall be accomplished in accordance with the TSA PGDS.

2. The cost of the security-related portion of the Project has been determined to be **$55,201,132** (CBIS Project Costs). TSA agrees to reimburse **CITY** for of the allowable, allocable and reasonable CBIS Project Costs, including design and construction management in addition to

construction costs but not to exceed a total reimbursement of **$55,201,132** (TSA Reimbursement Limit). TSA shall reimburse **CITY** for every dollar submitted by **CITY** for reimbursement of allowable, allocable and reasonable CBIS Project Costs up to the TSA Reimbursement Limit of **$55,201,132.**

3. TSA will determine allowable and allocable costs in accordance with the OMB Circular A-87 "Cost Principles for State, Local and Indian Tribal Governments" codified at 2 C.F.R. Part 225 (together with Appendices A – D) and Appendix F of the TSA PGDS. TSA will reimburse **CITY** on an actual expense basis supported by one or more invoices submitted by **CITY** in accordance with Article X "Payment." The parties understand and agree that all Project costs in excess of the TSA Reimbursement Limit of **$55,201,132**, as well as any costs that are inconsistent with OMB A-87 and the guidance set forth in the TSA PGDS, shall be borne solely by **CITY** unless otherwise agreed by the TSA in a written modification in accordance with this Article IV and Article XIII "Changes and/or Modifications." Should the TSA reimbursements of **$55,201,132**, represent more than the final allowable and allocable, and reasonable CBIS Project Costs, **CITY** will refund TSA sufficient funds such that TSA's total reimbursement will equal no more than the final allowable, allocable and reasonable CBIS Project Costs.

4. All costs requested for reimbursement must satisfy the requirements of both TSA's PGDS and OMB Circular A-87. In general, the costs for which TSA will provide reimbursement under this Agreement are limited to those costs associated with the CBIS area, the Checked Baggage Resolution Area (CBRA), and EDS network equipment room (if applicable to the CBIS Project) as defined in TSA's PGDS. Appendix F of the TSA's PGDS provides guidance regarding the reimbursable costs for TSA CBIS Projects.

A. Examples of costs commonly considered reimbursable under this Agreement include:
   - Soft cost allowances consisting of Design Fees, Project Management, Construction Management, Escalation, Design Contingency and Construction Contingency
   - Construction Costs:
     - Demolition (airport building or BHS components related to the CBIS area.)
     - BHS infrastructure upgrades, platforms, catwalks located within the CBIS screening area.
     - BHS: The BHS portion located within the CBIS screening area, including redesign and upgrading of conveyors to support the integration of the EDS screening system.
     - Conveyor redesign and upgrade within the CBIS screening area.
     - Build out of the EDS network equipment room
     - Acoustical treatment in the CBRA area.
     - Heating, Ventilation, Air Conditioning (HVAC) to maintain equipment and employee environmental requirements for CBIS, CBRA and EDS network equipment room.
     - Electrical and communications infrastructure (cabling, control panels) and basic lighting fixtures for the CBIS and CBRA.
     - Telephone systems/pager systems for TSA CBIS screening area.
     - Basic architectural finishes.

Identification of cost classifications herein does not create any obligation on TSA's part beyond the requirements found in OMB Circular A-87 and TSA's PGDS.

B. Examples of costs not considered reimbursable include, but are not limited to:
- Exterior Building Shell.
- Baggage make-up carrousels or outbound sortation systems.
- Maintenance, repair parts or spare parts (other than spare parts which are initially provided by the Original Equipment Manufacturer during the installation of new equipment) for airport terminal improvements including the baggage handling conveyor components installed under this Project.
- Manual encoding consoles or stations.
- Employee break rooms, administrative office space and restrooms not intended for the sole use of TSA staff.
- Architecturally pleasing enhancements.
- Extended warranties beyond one (1) year.

5. Change Orders shall not be considered authorization to exceed the TSA Reimbursement Limit unless **CITY** submits to TSA prior written notification of the expected impact to the CBIS Project Cost and the corresponding impact to the TSA Reimbursement Limit, and the TSA agrees in writing to the proposed Change Order, including the proposed increase to the CBIS Project Cost and the TSA Reimbursement Limit. **CITY** may not use the TSA contingency funds provided for the Project, as identified by TSA as part of this Agreement, without prior TSA written approval.

ARTICLE V: PROJECT RESPONSIBILITIES

The primary Project responsibilities of the TSA and **CITY** are outlined below. In addition to primary Project Responsibilities, specific technical responsibilities for the two parties are contained in Appendix C, "Project and Acceptance Testing Requirements", attached hereto and incorporated by reference into this Agreement. The Project will be overseen by **CITY**, except for those portions of the Project that are TSA's sole responsibility as set forth in this Agreement.

A. TSA Responsibilities

1. Provide the TSA's PGDS, as well as the EDS equipment specification upon request from the Airport.
2. Advise as to the type of EDS equipment to be provided at each Project design phase submission.
3. Furnish, deliver, install and test the EDS and ETD equipment.
4. Provide EDS Original Equipment Manufacturer Technical Support Advisory Services to the Airport regarding installation, integration and networking of the EDS units into the BHS.
5. Provide the CBIS System Specific Test Plan (SSTP) to the Airport for the commissioning, coordination and testing of the CBIS. See Appendix D for testing details. See Appendix B for further specifics relating to the TSA testing portion of the Project.

6. Establish and conduct the Integrated Site Acceptance Testing (ISAT) for the in-line CBIS performance capabilities with joint support from the Airport.
7. Review and approve ISAT results before the in-line CBIS is certified as ready for operational use.
8. Provide training for Transportation Security Officer personnel on the EDS equipment.
9. Evaluate the in-line CBIS in operation for 30 days after substantial use begins.
10. Review and consider requested changes submitted by the Airport to the CBIS design. Any changes in scope or associated costs must be approved in accordance with Article XIII "Changes and/or Modifications".
11. Provide maintenance, repair, and refurbishment to all TSA EDS and ETD equipment throughout its life cycle at no cost to **CITY**.

B. CITY Responsibilities

1. Except for the responsibilities of the TSA, as outlined above, the CBIS Project will be managed and overseen by **CITY**. **CITY**, acting through such contractors as it may engage, will provide the engineering and design services, as well as the associated construction and baggage handling system contractors, necessary for successful completion of the Project. **CITY** will provide oversight of such contractor(s) to ensure the Project conforms to the TSA endorsed design, PGDS criteria and is completed within the prescribed costs and schedule identified and incorporated herein as Appendix B.
2. CBIS designs should be OSHA compliant; adhere to the applicable EDS and ETD installation and integration guide specifications; and should comply with all applicable Federal, State, and local building regulations. Provisions will be made in the CBIS design that will allow TSA and its contractors full ingress to and egress from the CBIS area for the installation, operation, testing, maintenance, and repair of the EDS and ETD equipment.
3. Obtain all necessary construction licenses, insurance permits and approvals.
4. **CITY** shall deliver a firm EDS delivery schedule requirement date to TSA no later than 60 days after construction contract award. This schedule will be reviewed and approved by TSA based on OEM EDS delivery schedules. If project cannot meet the acceptance date, **CITY** will be responsible for the safekeeping of the EDS in a secure and climate controlled environment until such time the system(s) can be installed at the agreed upon site. **CITY** will be solely responsible for any damages and or extra startup costs associated with or that occur during this delay.
5. Ensure the Project site will be ready to accommodate the installation of the EDS units when delivered. Project site preparation includes, but is not limited to, BHS modifications, mechanical, heating, electrical site preparation, including infrastructure to protect electrical or fiber optic cables, environmental controls, and any other airport terminal infrastructure work required to support the operational environment of the EDS and ETD units.
6. Facilitate the installation of the EDS units by providing a clear path during rigging and EDS installation, and provide sufficient space to allow for initial deployment activities (such as uncrating the device).
7. Provide three (3) feet of maintenance access space around the equipment so that spare parts may be removed and replaced.

8. Once installed, provide reasonable measures to protect the EDS and ETD equipment from harm, theft, and water intrusion in the screening area.
9. Prior to TSA ISAT Testing, it shall be **CITY** responsibility to exercise due diligence to protect and insure the EDS equipment from damage due to ongoing construction or weather.
10. The Airport shall provide for personnel, assistance, equipment and support services to jointly execute the Test Readiness Review (TRR) and ISAT leading to the commissioning and acceptance of the CBIS. Support will include but not be limited to:
    a. Test bag laydown and storage areas secure and protected from the elements.
    b. Baggage handlers for test bag staging, induction and retrieval during testing and commissioning including personnel and equipment necessary to move test bags between staging and ISAT areas.
    c. Ensure representatives of the Baggage Handling System Contractor (BHSC), and System Programmer(s) are on site to run the CBIS during ISAT and resolve deficiencies found during testing.
    d. Airport badging required for TSA contractor ISAT team members shall be executed in a timely manner such that no greater than two (2) trips to the airport are necessary to complete all badging requirements to be issued and receive an airport badge. Should this requirement not be met, the Airport/ILDT shall provide all escorts necessary to allow the TSA ISAT Team to conduct the ISAT and follow-on live operations run-in observation.
    e. Provide TSA and their Contractors full and complete most recent documentation of the project to include "approved for Construction" sets of the mechanical, electrical and controls drawings and control descriptions, see Appendix B for details.
11. Perform and bear all cost of the operation, maintenance and repairs for the airport terminal installed property such as the baggage handling conveyor system, including the conveyors in the baggage screening matrix, heating, air conditioning, electrical and mechanical infrastructure in support of this Project.
12. Submit monthly milestone and project progress status reports by the 10th of each month to the TSA Regional Deployment Coordinator (RDC), TSA Site Lead Contractor and TSA Contracting Officer. Specific requirements for the content of the monthly project status report are identified in Appendix D.
13. CBIS designs and construction shall meet all requirements of the TSA Security Technology Integrated Program (STIP) Data Requirements for Checked Baggage Systems as shown in Appendix E. The Airport shall provide all deliverables required in the STIP Data Requirements to the TSA RDC.

For additional clarification regarding roles and responsibilities see Appendix B.

C. Operation and Maintenance Costs

It is understood and agreed that the EDS and ETD security screening equipment are and will at all times remain the property of the TSA. TSA will maintain, repair, and refurbish the EDS and ETD units at no cost to **CITY**.

Except for the EDS and ETD security screening equipment owned by the TSA and separately provided for use at the Airport, **CITY** shall own and have title to all airport terminal building

improvements made in accordance with this Agreement such as heating, ventilation, air conditioning, electrical and mechanical infrastructure, baggage handling conveyor systems and controls, or other assets which are acquired and installed under this Agreement in support of this Project. It will remain the responsibility of **CITY**, its contractors or lessees acting through such agents as it may use, to maintain, repair and or replace such airport property to sustain the operational environment of the EDS and ETD security screening equipment. Title to all airport terminal building improvements that were purchased or reimbursed using Federal funds for this Project, shall become the property of **CITY**, whether purchased with TSA, or **CITY** funds.

D. Deliverables
Appendix E identifies other required deliverables to be submitted by **CITY.**

ARTICLE VI - EFFECTIVE DATE AND TERM

A. CONSTRUCTION

The term of this Agreement shall be from the date of execution of the Agreement until **September 1st, 2016**, unless earlier terminated by the parties pursuant to Article XV "Termination" as provided herein or extended by mutual agreement pursuant to Article XIII "Changes and/or Modifications", in order to allow **CITY** time to submit a final invoice, close out the Project, and address any other issues.

CITY will establish and provide same to the TSA Regional Deployment Coordinator (RDC) and TSA CO within 30 days of execution of this Agreement, Project Milestones that allow objective measurement of progress toward completion. TSA maintains the right to identify any additional Project Milestones to be tracked by **CITY**.

ARTICLE VII - ACCEPTANCE AND TESTING

TSA will deem the CBIS-related portion of the Project complete upon successful results of the TSA ISAT (Integrated Site Acceptance Test) as conducted by the TSA independent Acceptance Test Contractor and successful completion of the 30-day Operational Run-In period. TSA ISAT will evaluate the CBIS against the TSA PGDS version stated in this Agreement as well as assess and comment on functional and performance differences to the most current version of the PGDS version published at the time of ISAT.

Successful completion of Project requires the correction of CBIS deficiencies identified during the TSA ISAT as documented in the Quick Look Report (QLR) and as followed up at the end of the Operational Run-In period in the Test Summary Report (TSR). TSA will release the funds retained pursuant to Article X only after the CBIS has passed the ISAT test and Operational Run-In period and the deficiencies have been corrected. Additional details are contained in Appendix C, "Project and Acceptance Testing Requirements"

ARTICLE VIII - AUTHORIZED REPRESENTATIVES

The authorized representative for each party shall act on behalf of that party for all matters related to this Agreement. Each party's authorized representative may appoint one or more personnel to act as an authorized representative for any administrative purpose related to this

Agreement, provided written notice of such appointment is made to the other party to this Agreement. The authorized representatives for the parties are as follows:

A. TSA Points of Contact:
Regional Deployment Coordinator/Contracting Officer's Representative:
John Reed
Mail Stop TSIF #32
Transportation Security Administration
1 Post Office Road
Washington, DC 20528-6032
Phone: 571-227-1563
E-Mail: john.reed1@dhs.gov

Contracting Officer:
Matthew Ashurst
701 South 12th Street
Arlington, Va. 20598
Phone: 571-227-5376
E-Mail: matthew.ashurst@dhs.gov

Only the TSA Contracting Officer (CO) shall have the authority to bind the Federal government with respect to scope of work, funding and liability. The TSA Regional Deployment Coordinator (RDC) is also the TSA Contracting Officer Representative (COR) and is responsible for the technical administration of this Agreement and technical liaison with the City. The TSA COR is not authorized to change the scope of work, to make any commitment or otherwise obligate the TSA, or authorize any changes which affect the liability of the TSA such as amount or level of funding.

The City must notify the TSA CO and COR in the event that any TSA employee or TSA contracted agent takes any action that may be interpreted by the City as direction which could increase the Construction Project costs and could cause the City to seek reimbursement from TSA in excess of the TSA's total reimbursement liability as defined in Articles IV and IX of this Agreement.

B. CITY Points of Contact:

James L. Drinkard, P.E
Assistant General Manager - Planning and Development
Jim.Drinkard@atlanta-airport.com

ARTICLE IX - FUNDING AND LIMITATIONS

TSA will provide funding to **CITY** in an amount not to exceed **$55,201,132** (TSA Reimbursement Limit). Funds in the amount of **$55,201,132** are hereby obligated and made available for payment for performance of this Agreement. Expenses incurred in executing the work identified herein are chargeable to:

PR: 2113203CT1141

Accounting Line: 5CF13XB010D2013SWE044GE013723006200622CTO-5903001101010000-251B-TSA DIRECT-DEF. TASK-D

Amount: **$55,201,132**

In the event of termination or expiration of this Agreement, any TSA funds that have not been spent or incurred for allowable expenses prior to the date of termination and are not reasonably necessary to cover allowable and allocable costs as of the date of termination will be returned and/or de-obligated from this Agreement. TSA's liability to make payments to **CITY** is limited to the funds obligated and available for payment hereunder, including written modifications to this Agreement.

Under no circumstances will TSA be responsible to reimburse **CITY** for profit or the general costs of government. **CITY** may recover the allowable direct costs of **CITY** personnel performing work necessary under this Agreement, as well as the allowable and allocable costs of the contractors hired by **CITY** to perform the necessary work under this Agreement. Profit and overhead costs for **CITY** contractors performing work on the Project are allowable costs. Submission of a cost allocation plan is required to address any indirect costs, to include **CITY** employees, who work on multiple activities that will result in a request for reimbursement under this Agreement. TSA will not be responsible for costs incurred by **CITY**, its contractors or agents to perform work not in compliance with the TSA requirements in this Agreement. The TSA CO has the right to recoup any payments made to **CITY** if the TSA CO determines that the invoices exceed the actual costs incurred, or if the work substantially deviates from the TSA approved CBIS design requirements for the Project pursuant to this Agreement.

TSA will reimburse only for allowable, allocable and reasonable costs in accordance with the OMB Circular No. A-87 in effect on the Effective Date of the Agreement (codified at 2 C.F.R. Part 225) and the allowable/not-allowable costs identified in Appendix F of TSA's PGDS.

ARTICLE X – PAYMENT

The United States Coast Guard Finance Center performs the payment function on behalf of the TSA. For purposes of submission to the Coast Guard Finance Center, the City must submit a completed Summary Invoice. Registration in the System for Award Management (SAM) is mandatory for invoice payment. To obtain information regarding SAM, please refer to https://www.sam.gov/portal/public/SAM/.

Invoices for reimbursable expenses will be submitted every thirty (30) days, as expenses are incurred. For periods in which the City has not incurred a reimbursable expense, an invoice is not required. Expenses are considered to accrue on the date that the City is invoiced from a contractor, sub-contractor, supplier, or provider of services. Reimbursement by TSA is conditioned upon submission to TSA of an invoice identifying the Project costs that have been incurred and paid. The TSA intends to make payment to the City within 120 days from receipt of each properly prepared invoice for reimbursement of incurred Project costs.

Ten percent (10%) of all submitted costs identified by TSA as allowable, allocable and reasonable shall be retained by TSA until completion of the Project, and shall only be reimbursed to **CITY** upon successful completion of all of its obligations under this Agreement, including, completed system documentation submitted to TSA and successful completion of all testing as required in

Article VII of this Agreement.

In the event that an invoice for reimbursable expenses is not received by the TSA within a twelve (12) month period, the TSA reserves the right to terminate the Agreement per Article XV "Termination."

The TSA reimbursement process consists of two steps.

Step 1 – Summary Invoice Submittal to the U.S. Coast Guard Finance Center for Payment, and at a minimum should contain the following information:

(1) Agreement Number:HSTS04-13-H-CT1141
(2) Invoice Number and Invoice Date
(3) Complete Business Name and Remittance Address
(4) Point of Contact with address, telephone, fax and e-mail address
(5) Tax Identification Number and DUN's Number
(6) Dollar Amount of Reimbursement requested
(7) Signature of the City's authorized representative and the following certification language: *"This is to certify that the services set forth herein were performed during the period stated and that the incurred costs billed were actually expended for the Project."*

The Summary Invoice may be submitted by standard mail or by electronic transmission to the following address(s):

Mailing Address: TSA Commercial Invoices
USCG Finance Center
P.O. Box 4111
Chesapeake, VA 23327

Email: FIN-SMB-TSAINVOICES@uscg.mil

Step 2 – Submission of Summary Invoice and Supporting Documentation Submittal to TSA for Approval of Payment:

The TSA CO and the COR are required to review and the TSA CO will approve all invoices prior to payment. To aid in this review, the City shall provide a copy of the Summary Invoice along with all receipts, contractor pay requests and other supporting information which specify the vendor, services provided, and products delivered as well as the appropriate documentation that the City has paid these obligations. The City should provide this supporting information simultaneously with Step 1 to expedite the payment process.

The Support Documentation should contain the following items:

- Summary Invoice from Step 1
- An executive summary project overview with the first invoice

- A summary spreadsheet providing a categorized breakdown of the amount invoiced
- Signed, approved and legible copies of each individual contractor's invoice to include schedules of values scope of work
  - Copies of contracts and change orders that provide support for the actual work being invoiced
  - Vendor and subcontractor invoices with specific details about services provided
  - Rationale for all allocations or unusual calculations or assumptions
  - Copies of subcontractor's invoices if listed on a prime contractor's invoice as a single amount (copies of timesheets and detailed backup not required if descriptions are clear and specific)
- Proof of payment by the City for each invoice in the form of copies of check/warrants, bank wire transfers, or accounting systems transactions

The Summary Invoice and supporting documentation may be submitted by email or mail via CD or paper documents to the below addresses. The final closeout invoice should include proof that all required deliverables have been provided.

John Reed
Mail Stop TSA TSIF - #32
Transportation Security Administration
1 Post Office Way
Washington, D.C. 20528-6032
Email: OSTCBD @tsa.dhs.gov

Matthew Ashurst, TSA CO
C/O Mr. Henry Edquist
Faithful & Gould
1725 Duke Street, Suite #200
Alexandria, VA 22314
Phone: 571-403-8777
Email: Henry.Edquist@fgould.com

Upon completion of the review of the supporting documentation for the Summary Invoice, the TSA CO and the TSA RDC/COR will advise the Coast Guard Finance Center regarding payment of the Summary Invoice.

TSA may pay any charges due under this Agreement by electronic funds transfer, check, or other means. Any charges due under this Agreement shall be due in arrears and, to the extent appropriated funds are available, shall be paid within 120 days of TSA's receipt of a proper invoice from the CITY The Prompt Payment Act, 31 U.S.C. §§ 3901-06, as implemented at 5 CFR 1315, applies to payments made under this Agreement. The Government will compute the interest penalty in accordance the Office of Management and Budget prompt payment regulations at 5 CFR Part 1315.

ARTICLE XI - AUDITS

The Federal Government, including the Comptroller General of the United States, has the right to examine or audit relevant financial records for a period not to exceed three (3) years after expiration of the terms of this Agreement. The CITY and its contractors must maintain an established accounting system that complies with generally accepted accounting principles. Records related to disputes arising out of this Agreement shall be maintained and made available

until such disputes have been resolved. As used in this paragraph, "records" includes books, documents, accounting procedures and practices, and other data, regardless of type and regardless of whether such items are in written form, in the form of computer data, or in any other form related to this Agreement.

The City shall maintain all records and other evidence sufficient to reflect costs claimed to have been incurred or anticipated to be incurred directly or indirectly in performance of this Agreement. The TSA CO or the authorized representative of the TSA CO shall have the right to examine and audit those records at any time, or from time to time. The right of examination shall include inspection at all reasonable times at the offices of the City or at the offices of the City's contractor(s) responsible for the Construction Project. The City will be required to submit cost or pricing data and supporting information in connection with any invoice relating to this Agreement if requested by the TSA CO.

This Article XI shall not be construed to require the City or its contractors or subcontractors to create or maintain any record that they do not maintain in the ordinary course of business pursuant to a provision of law, provided that those entities maintain records which conform to generally accepted accounting practices.

The City shall insert a clause containing the terms of Article XI – Audits in all of its contracts and subcontracts under this Agreement that exceed $100,000.00 (One Hundred Thousand Dollars).

ARTICLE XII – REQUIRED FEDERAL PROCUREMENT PROVISIONS

Competition in the award of contracts or procurements resulting from this Construction Project is strongly encouraged and the **CITY** should promote competition to the maximum extent practicable. The **CITY** may follow its local procurement requirements for this Agreement. The **CITY** agrees to include in its contract(s) a provision that **ATL**'s designs for this Construction Project are required to comply with the TSA's PGDS.

ARTICLE XIII – CHANGES AND/OR MODIFICATIONS

Changes and modifications to this Agreement shall be in writing and signed by the TSA CO and duly executed by the authorized representative of **CITY**. Any modification shall cite to this Agreement and shall state the exact nature of the change and/or modification. No oral statement by any person shall be interpreted as modifying or otherwise affecting the terms of this Agreement. The properly signed written modification shall be attached to this Agreement and thereby becomes a part of this Agreement.

ARTICLE XIV – DISPUTES

When possible, disputes will be resolved by informal discussion between the parties. All disputes arising under or related to this Agreement shall be resolved under this Article. Disputes, as used in this Agreement, mean a written demand or written assertion by one of the parties seeking, as a matter of right, the adjustment or interpretation of Agreement terms, or other relief arising under this Agreement. The dispute shall be made in writing and signed by a duly authorized representative of **ATL** or the TSA. At a minimum, a dispute under this Agreement

shall include a statement of facts, adequate supporting data and a request for relief. In the event that the parties are unable to resolve any disagreement through good faith negotiations, the dispute will be reviewed and adjudicated by the TSA Assistant Secretary or his or her designee. If a party disagrees with the decision of the TSA Assistant Secretary or his or her designee, they may pursue other available legal remedies.

ARTICLE XV – TERMINATION

In addition to any other termination rights provided by this Agreement, either party may terminate this Agreement at any time prior to its expiration date, with or without cause, and without incurring any liability or obligation to the terminated party (other than payment of amounts due and performance of obligations accrued, in each case on or prior to the termination date) by giving the other party at least thirty (30) days prior written notice of termination. Upon receipt of a notice of termination, the receiving party shall take immediate steps to stop the accrual of any additional obligations that might require payment.

In the event of termination or expiration of this Agreement, any TSA funds that have not been spent or incurred for allowable expenses prior to the date of termination and are not reasonably necessary to cover termination expenses will be returned and/or de-obligated from this Agreement.

ARTICLE XVI – CONSTRUCTION OF THE AGREEMENT

This Agreement is an "other transaction" issued under 49 U.S.C. § 106(l) and 114(m)(1) and is not a procurement contract, grant or cooperative agreement. Nothing in this Agreement shall be construed as incorporating by reference or implication any provision of Federal acquisition law or regulation. It is not intended to be, nor shall it be construed as creation of a partnership, corporation, or other business entity between the parties.

Each party acknowledges that all parties hereto participated equally in the negotiation and drafting of this Agreement and any amendments thereto, and that, accordingly, this Design/Agreement shall not be construed more stringently against one party than against the other.

This Agreement constitutes the entire agreement between the parties with respect to the subject matter hereof and supersedes all prior agreements, understandings, negotiations and discussions, whether oral or written, of the parties.

In the event that any Article and/or parts of this Agreement are determined to be void or otherwise invalid or unenforceable, such Article or portions thereof shall lapse. No such lapse will affect the rights, responsibilities, and obligations of the parties under this Agreement, except as provided therein. If either party determines that such lapse has or may have a material effect on the performance of the Agreement, such party shall promptly notify the other party, and shall negotiate in good faith a mutually acceptable amendment to the Agreement if appropriate to address the effect of the lapse.

ARTICLE XVII - PROTECTION OF INFORMATION

The parties agree that they shall take appropriate measures to protect all proprietary, privileged, confidential, or otherwise Sensitive Security Information (SSI) that may come into their possession as a result of this Agreement.

A. RELEASE OF TECHNICAL DATA

No Sensitive Security Information (SSI), as defined in 49 CFR Parts 15 and 1520, concerning the scope of this Agreement, shall be published or released to the public without prior written approval of the TSA Assistant Secretary or his or her designee. Guidance regarding SSI may be found in Appendix G, Checked Baggage Screening Equipment Sensitive Security Information Identification Guide", of the TSA PGDS.

B. RECORDS AND RELEASE OF INFORMATION

All Sensitive Security Information (SSI), as defined in 49 CFR Part 1520, shall be handled in accordance with TSA policies and regulations. All employees, contractors, and subcontractors assigned to work under this Agreement are subject to the provisions of 49 CFR Part 1520, Protection of Sensitive Security Information, because they act for, or carry out duties for, or on behalf of the TSA. SSI may not be disclosed except in accordance with the provisions of that rule or where TSA otherwise approves.

C. MEDIA

Neither the City, nor its contractors shall include in its publicity or public affairs activities related to the subject matter of this Agreement any SSI unless written approval has been received from the TSA Office of Security Capabilities or the TSA Office of Strategic Communication and Public Affairs. The purpose of this provision is to preclude the inadvertent release of SSI to the general public.

ARTICLE XVIII - SURVIVAL OF PROVISIONS

The following provision of this Agreement shall survive the termination of this Agreement: Article IV – Cost Sharing and Other Responsibilities; Article IX – Funding and Limitations; Article XI – Audits; Article XII – Required Federal Procurement Provisions; Article XIV – Disputes, Article XVII – Protection of Information and Article XVIII – Survival of Provisions.

(continued on the following page)

IN WITNESS WHEREOF, the Parties have entered into this Agreement by their duly authorized officers this 27th day of September, 2013.

U. S. Department of Homeland Security
Transportation Security Administration

Matthew Ashurst
TSA Contracting Officer

09/26/13
Date

City of Atlanta

Mayor

Attest:

Municipal Clerk

Approved:

Aviation General Manager

Assistant Aviation General Manager

Chief Procurement Officer
Department of Procurement

Approved as to Form:

Kristen M Richtenwald
City Attorney

Figure 2-4
DELIVERABLES CHECKLIST

PROJECT PHASE DELIVERABLES	SECTION	Completed Yes	Completed No
Pre-Design Phase	2.2.1	☐	☐
Preliminary Alternatives Analysis Report		☐	☐
Preferred Alternatives Analysis Report		☐	☐
Schematic Design Phase		☐	☐
Basis of Design Report	2.2.2	☐	☐
Detailed Program Requirements		☐	☐
High-Level Flow-Based Modeling Assumptions and Results		☐	☐
Preliminary Concept Plans		☐	☐
Phasing and Constructability Technical Memoranda		☐	☐
ROM Estimate of Probable Construction and O&M Costs		☐	☐
Stakeholder Review and Approval Documentation		☐	☐
Preliminary Project Schedule		☐	☐
Detailed Design Phase	2.2.2	☐	☐
30% Design Submittals	2.2.3.1	☐	☐
Updated Basis of Design Report		☐	☐
Operational Standards Assessment		☐	☐
Preliminary Plans		☐	☐
Cross Sections		☐	☐
Description of Operations		☐	☐
Baggage and Data Flow Charts		☐	☐
Table of Contents for CBIS		☐	☐
Screening Equipment Installation Guidelines		☐	☐
Outline of Reporting Capabilities		☐	☐
Stakeholder Review and Approval Documentation		☐	☐
30% Estimate of Probable Construction and O&M Costs		☐	☐
Preliminary Phasing Schedule		☐	☐
Conveyor Manifest		☐	☐
EDS Equipment List		☐	☐
70% Design Submittals	2.2.3.2	☐	☐
Updated Basis of Design Report		☐	☐
Updated Operational Standards Assessment		☐	☐
70% Design Drawings		☐	☐
Cross Sections		☐	☐

PROJECT PHASE DELIVERABLES	SECTION	Completed Yes	Completed No
Detailed Design Phase (continued)		☐	☐
70% Design Submittals (continued)		☐	☐
Description of Operations		☐	☐
Preliminary Contingency Plan		☐	☐
70% Specifications		☐	☐
Draft Site Specific Configuration Management Plan		☐	☐
Stakeholder Review and Approval Documentation		☐	☐
70% Estimate of Probable Construction and O&M Costs		☐	☐
Phasing Schedule		☐	☐
Conveyor Manifest		☐	☐
Updated EDS Equipment List		☐	☐
100% Design Submittals	2.2.3.3	☐	☐
Bid Documents		☐	☐
Final Description of Operations		☐	☐
Contingency Plans		☐	☐
Project Specifications		☐	☐
Final Site Specific Configuration Management Plan		☐	☐
Stakeholder Review and Approval Documentation		☐	☐
Final Estimate of Probable Construction and O&M Costs		☐	☐
Final Phasing Schedule		☐	☐
Updated EDS Equipment List		☐	☐
Operations Training Materials and Documentation		☐	☐
Construction Phase	2.2.4	☐	☐
Changes to Approved 100% Design Submittals		☐	☐
Construction Schedule		☐	☐
Courtesy Copies of Shop and Installation Drawings		☐	☐
Testing and Commissioning Phase	2.2.5	☐	☐
Pre-ISAT Documentation		☐	☐
ISAT Documentation		☐	☐
Project Closeout Phase	2.2.6	☐	☐
As-built CBIS Documentation Submittal		☐	☐
Final Copy of the PLC Program with Drawings		☐	☐
Final Copy of Disaster Recovery Procedures		☐	☐

Appendix B
Project and Acceptance Testing Requirements

Scope: TSA support for the in-line Checked Baggage Inspection System (CBIS) solution at the **CITY OF ATLANTA** will encompass design, construction and commissioning to support the in-line CBIS.

A. TSA responsibilities with regard to the Project are listed below in sections 1.1 to 1.7. Many responsibilities are delegated to TSA contractors such as the EDS Original Equipment (OEM) Manufacturer, TSA Site Lead Contractor, and TSA Acceptance Test Contractor but ultimate responsibility resides with TSA.

1.1 EDS PLACEMENT

If applicable, TSA will ship, rig and install EDS machines and associated EDS screening equipment, to include any necessary ETD screening equipment, in their respective operational locations within the CBIS Project location. TSA, through the EDS OEM or other TSA contractors, shall be responsible for coordinating and integrating activities regarding placement of EDS equipment with the local TSA Point of Contact and Airport Point of Contact.

1.2 INSTALLATION SUPPORT

1.2.1 Project Management

As applicable, the TSA Site Lead Contractor and the EDS OEM shall be responsible for providing technical support throughout the entire period of performance during the installation Project. The OEM shall be responsible for all labor, materials, equipment, and support services required for planning, managing, and supervising all items related to the installation of the EDS units and associated ancillary equipment.

1.2.2 Technical Support

TSA will provide technical support to the Project through existing TSA contracts with the EDS OEM, TSA Site Lead Contractor, and TSA Acceptance Testing Contractor.

- The identified TSA Site Lead Contractor should be included in all relevant CBIS planning/project meetings relevant to TSA contributions to the Project. Project schedules and updates should be provided to the TSA Site Lead Contractor to ensure TSA has timely and sufficient notice of deliverable dates. The TSA Site Lead Contractor will assess the project progress against the project schedule and approved design to advise TSA of issues related to cost, schedule and/or performance impacts to the in-line project.

- The EDS OEM shall provide technical consultations to the TSA Regional Deployment Coordinator (RDC), TSA Site Lead Contractor, TSA Acceptance Test Lead, TSA Acceptance Testing Contractor and Airport regarding Project efforts that may include, but are not limited to: teleconferences; reviews of drawings and specifications; and exchanges of technical documentation such as specifications, manuals, and guides.

- TSA Acceptance Testing Contractor shall support ISAT of the CBIS (the EDS units, BHS and the integration between them) and will develop relevant CBIS test plans and reports that will be shared with the Airport.

- Support for the development and execution of the TSA Other Transaction Agreement in place between TSA and the **CITY** will be provided by TSA Office of Acquisition.

- Oversight and coordination of technical aspects of the Project will be provided by the TSA Regional Deployment Coordinator.

- Local TSA personnel shall support coordination of issues between TSA Regional Deployment Coordinator (RDC) and the Airport as directed by the Federal Security Director (FSD).

Title	Name	Contact Information
TSA Regional Deployment Coordinator	**John Reed**	**john.reed1@dhs.gov** **571-227-1563**

1.2.3 Commissioning Services

TSA, through the EDS OEM and its other TSA contractors, shall be responsible for all labor, materials, equipment, and support services needed to assemble, power up, configure, and install the EDS machines into the required operational condition. The EDS OEM shall provide technical support, documentation, and installation of the EDS units and the associated local Baggage Viewing Stations (BVS) after confirmation that all pre-installation requirements have been met. The EDS OEM shall coordinate with the TSA RDC, TSA Site Lead Contractor, TSA Acceptance Test Lead, and the Airport to perform system testing.

1.3 Acceptance Testing

Mandatory testing for this system includes Site Acceptance Testing (SAT) for the EDS units following installation; pre-Integrated Site Acceptance Testing following the integration of the EDS units with the BHS is affirmed through a Test Readiness Review (TRR) and Test Readiness Notice (TRN); and Integrated Site Acceptance Testing (ISAT) is conducted prior to TSA acceptance of the CBIS system for operational use. TSA may elect to oversee BHS pre-ISAT conduct to confirm readiness of the system and conduct the TRR within the timeline of the ISAT to reduce the overall testing timeline. See the following table for minimum lead time requirements for testing activities.

Table 1. ISAT Timeline

Lead Times for ISAT (Days Prior to projected test date)	Activity	Responsible Parties
Site Initiation or ≥180 days from ISAT	Site Survey Data Collection Checklist provided to the ILDT to complete to support the ISAT Site Specific Test Plan (SSTP) development.	TSA RDC, TSA Site Lead Contractor
≥120 days	Completed Site Survey Data Collection Checklist and supporting site documentation received by TSA Acceptance Test Contractor from TSA Site Lead Contractor, to include: • Any and All Approved Request for Variance (RFV) • Basis of Design Report • Sample BHS & CBIS Reports for all PGDS required Reports • BHS & EDS Network Diagrams and Server Architecture • Local Procedures for Fail-Safe, E-Stop, Jam Clearing and IQ Test Conduct • Airport/Airline Bag Induction/Hygiene Procedures • BHS Specifications • Controls Description and/or Description of Operation (if both exist then provide both) • Fail-safe and/or E-Stop Zone Drawings • BHS Mechanical Plan and Elevation Drawings from Natural Induction Locations to & through the CBIS, CBRA and Make-up Locations with Conveyors labeled, Plan View Drawings and Electrical Drawings of the BHS/CBIS with Control Station & Photoeye Locations and labeling. All drawings will be "Approved for Construction" by the Airport and not Pre-Bid or Bid Use Only versions. • At least 1 Plan/OverView Drawing that shows the entire CBIS in a single	ILDT, TSA Site Lead Contractor

	view • Conveyor Motor Manifest to include not less than (Conveyor Name, Phase, Conveyor Type, Degree of Turn, Degree of Incline/Decline, Length, Speed in FPM, Motor HP, Control Type (VFD yes/no), Brake Type, Motor Type, drive Type, FLA Rating). • Installation & Commissioning Phasing Plan Narrative and Phasing Plan Drawings • Construction and Testing Schedule(s)	
≥90 days	On-site Site Survey Meeting held. to conduct initial test coordination and review the draft SSTP. This visit will allow the TSA Acceptance Test Contractor to tour the site, review the draft SSTP with the ILDT, coordinate logistics and manpower and initiate the SIDA badge application process, if required. TSA Site Lead Contractor coordinates schedule with the ILDT and TSA's Acceptance Test Contractor.	ILDT, TSA RDC, TSA Site Lead Contractor, TSA Acceptance Test Contractor
≥45 days	Final SSTP Review Meeting between the TSA Acceptance Test Contractor and the ILDT to review the final SSTP, include any other approved RFV, verify logistics & manpower, and review specific tests to be performed. Any requests for variance from the SSTP testing requirements must be delivered in writing to the TSA RDC prior to this meeting for review and response. This is the last chance for the ILDT to disclose any test standards that cannot be met in writing and formally justify exemption from test criteria. Any final revisions to the SSTP will be made and distributed to the ILDT and RDC prior to test execution.	ILDT, TSA Site Lead Contractor, TSA Acceptance Test Contractor, TSA RDC
Typically 14 days to 1 day	TSA Acceptance Test Contractor will ship test articles to the ILDT. The ILDT receives the test articles and stores in a secure and weather protected laydown area as agreed to by the ILDT and TSA Acceptance Testing Contractor in the Final SSTP Review Meeting.	ILDT, TSA Acceptance Test Contractor
≥11 business days	CBIS pre-testing - The ILDT conducts pre-	ILDT, TSA Site

	testing. The TSA Site Lead contractor will provide oversight of CBIS pre-testing to validate the Test Readiness Notification (TRN) to the TSA RDC and Acceptance Test Team. The ILDT delivers internal pre-ISAT test results to the TSA Site Lead Contractor and the Site and TRR readiness confirmation letter to the TSA RDC and Acceptance Test Team. Upon successful review, the TSA Site Lead Contractor is deployed to the site within 7 days. Note: TSA may combine TRN with CBIS pre-testing and/or conduct TRR as a subset of ISAT	Lead Contractor
≥7 business days	TSA Acceptance Testing Contractor or Site Lead Contractor initiates & performs the TRR. Note: TRR Performance by Acceptance Testing Contractor will be a subset of overall ISAT duration and permit passed tests to be credited toward ISAT completion. TRR failure will result in 2 week moratorium.	ILDT, TSA Site Lead Contractor
≥3 business days	When notice of successful TRR is completed and delivered to the TSA Acceptance Testing Contractor via a TRN no later than COB Wednesday (5:00 p.m. EST), ISAT deployment will occur the following Monday. If delivered any time Thursday through Sunday, the TSA Test Team deployment will occur on the second Monday.	TSA Site Lead Contractor, TSA Acceptance Test Contractor
1 business days	TSA Acceptance Test Contractor travel day (normally Monday)	TSA Acceptance Test Contractor
Test start	TSA Acceptance Test Contractor travel day (normally Monday) with mobilization activities and an in-brief meeting with ILDT on the next business day. Prior to start of testing, TSA Acceptance Test Contractor will accept PLC code from TSA Site Lead Contractor or ILDT prior to the start of testing. TSA Acceptance Test Contractor and ILDT will work together to perform ISAT and collect BHS and EDS performance documentation. Prior to departing the site, an Out-brief meeting will be held for all site	ILDT, TSA Acceptance Test Contractor, TSA Site Lead Contractor

	stakeholders.	
≤2 business days after ISAT complete	QLR is submitted by the TSA Test Acceptance Contractor to the TSA Acceptance Test Lead and RDC for review and approval	TSA Acceptance Test Contractor, TSA Acceptance Test Lead, TSA RDC
X business days after QLR receipt	TSA conducts ISAT review board based on QLR results to determine readiness of CBIS to enter Live Operations and Bag Screening or whether to return CBIS to ILDT for correction of deficiencies prior to Live Operations	TSA RDC, TSA Acceptance Test Lead,
5 business days after ISAT review board decision	QLR is distributed by the TSA Deployment RDC	TSA RDC
For 30+ days from start of substantial use	The TSA Acceptance Test Contractor remotely monitors system performance during live operations run-in period and observes system on-site for 3+ days	ILDT, TSA Acceptance Test Contractor, TSA Test Lead
5 business days following completion of data collection and onsite observation for run-in	The TSA Acceptance Test Contractor provides a Test Summary Report (TSR) to the TSA Acceptance Test Lead and RDC for review and approval.	TSA Acceptance Test Contractor, TSA RDC, TSA Acceptance Test Lead
5 business days	RDC distributes TSA approved TSR to ILDT	ILDT, TSA RDC

1.3.1. Site Acceptance Testing (SAT)

The EDS OEM shall coordinate and conduct SAT testing on the EDS machines in the presence of a TSA designated government witness. The EDS OEM shall implement and coordinate testing by issuing a Test Readiness Notification (TRN) at least 7 days prior to the scheduled Acceptance testing. Passing SAT results are required prior to final integration of EDS to the BHS and to certify equipment readiness for operational use in screening baggage. In the event that the TSA supplied EDS units cannot meet SAT test requirements, TSA will ensure that any EDS machine defects are corrected or that the EDS unit is replaced.

1.3.2. Site Specific Test Plan Development (SSTP)

TSA has arranged for its Acceptance Test Contractor to develop a SSTP based on testing criteria outlined in the TSA PGDS Appendix D. The Draft SSTP will be based on the Airport's responses to a Site Planning Checklist to be completed ≥120 days in advance of ISAT. The Final SSTP shall be delivered to the Airport between 60 and 30 days in advance of projected ISAT start-up. The ILDT and TSA Acceptance Testing Contractor will conduct review meetings of the Draft SSTP and Final SSTP per schedule in Table 1, Section 1.3 of this OTA prior to ISAT. Any requests for deviation from the SSTP testing requirements must be delivered in writing

through a RFV to the TSA RDC and Acceptance Test Lead prior to this Final SSTP meeting for review and response.

The TSA RDC and TSA Acceptance Test Lead will review/evaluate any requests for phased testing (e.g. non-consecutive testing activities requiring multiple TSA Test Team trips). Such requests must be supported by compelling justification and submitted in writing through a RFV to the TSA RDC and TSA Acceptance Test Lead during the design process and well in advance of SSTP development. Programming or mechanical changes made before ISAT (typically during Contractor pre-testing) must be documented and provided to the TSA RDC and TSA Acceptance Testing Contractor. Once a system enters TRR, no variances will be permitted to the testing criteria.

1.3.3. Integrated Site Acceptance Testing (ISAT)

Scheduling and Coordination: Construction schedule including the ISAT start date(s) and duration(s) shall be shared with the TSA Site Lead Contractor, TSA RDC, TSA Acceptance Test Lead and TSA Acceptance Test Contractor through weekly and monthly meetings and reports upon submission of the SSTP checklist to ensure all stakeholders maintain schedule awareness. This schedule shall be distributed each time changes are made to the ISAT start date and/or duration. Changes made to the schedule within two weeks of the planned ISAT start date may relieve the TSA of the obligation to begin testing within three business days of the TRR. In this situation, the ISAT start date could depend on TSA's testing workload and resource allocation.

Test Results and Reports:

Testing results will be shared in hard copy format with the Airport from the RDC through the local TSA Point of Contact. Test results will identify security, efficiency and safety concerns. There are four (4) possible test outcomes:

- **Meets PGDS Criteria** – The system under test meets CBIS design and PGDS criteria.
- **Minor Defects Found** – The system under test had no security failures and performance deficiencies would not impede system performance and staffing levels.
- **Major Defects Found** – The system under test had no security failures but performance deficiencies would be detrimental to system performance and/or staffing levels.
- **Fail** – The system under test produced security failures and/or deficiencies that would be excessively detrimental to system performance and staffing levels.

In the event of a failed ISAT result, TSA reserves the right to defer any subsequent re-tests for a period of at least 30 days.

1.4 INTEGRATION SERVICES

1.4.1. BHS Support

The EDS OEM shall assist the **CITY's** contractor to establish digital and serial communication for the EDS units. Once communication between devices has been established, the EDS OEM shall provide the following support and integration services.

- Assist the BHS contractor to obtain efficient EDS operation.
- Provide on-site Integration Engineer Support Services to facilitate the entire integration effort with the BHS.

- Be available to support system testing and validation conducted by internal or external organizations including the Integrated Site Acceptance Test (ISAT) and pre-ISAT Project testing and throughout the planning phases including the issuance of the ISAT TRN and TRR.
- During initial Live Operations Run-In, provide system performance documentation and technical assistance as requested by TSA, TSA Acceptance Testing Contractor and/or the ILDT.

1.4.2. Software and Hardware
Following SAT and throughout the integration effort, the EDS OEM shall install and test the required software and hardware to allow for digital and serial communication between the EDS and the BHS PLC if required. Functionality of the EDS BHS interface hardware and software shall be verified by the EDS OEM at the interface box prior to working with the Airport BHS contractor to ensure a proper operating PLC interface and to avoid delays.

1.5 SYSTEM NETWORKING

1.5.1 Network Infrastructure
The EDS OEM shall provide required patch cables and miscellaneous hardware to interface between network patch panel and EDS OEM supplied networking components.

1.5.2 Network Services
The EDS OEM shall provide: training for TSA staff; coordination and support for TSA and testing certification; and resources to conduct installation, testing, and initial operational support for networking. No other network may interface with the networked airport screening solution. The implemented assigned network for operation shall be an isolated, stand-alone network.

1.6. TRAINING
TSA will provide training for TSA screening staff on the operation of the EDS and ETD equipment.

1.7. MAINTENANCE
Upon successful completion of SAT testing for each unit, TSA will maintain and repair the EDS and ETD units throughout their lifecycles.

B. CITY's RESPONSIBILITIES with regard to the Project are listed below in sections 2.1 to 2.5 listed below.

2.0 DESIGN
The **CITY** will undertake design of a baggage screening system in accordance with the TSA PGDS to meet the needs of the Airport and TSA FSD. The **CITY** shall submit all applicable design requirements to the TSA RDC for review and as further defined in Chapter 2 of PGDS Version 4.1. The **CITY** shall respond to TSA design review comments promptly and in writing prior to the start of the next design phase for the CBIS Project.

2.1 EDS PLACEMENT

If applicable, the **CITY** shall ensure that the Project site will be ready to accommodate the installation of the EDS and associated equipment. The **CITY** shall provide adequate protection to the EDS machines and to the airport infrastructure during any and all EDS movements. The **CITY** shall coordinate with the OEM to integrate all activities regarding placement of EDS equipment. The **CITY** shall provide reasonable measures to protect the EDS and ETD equipment from damage in the screening area.

2.1.1 Site Readiness and Storage

The **CITY** shall confirm site readiness to receive EDS units to the TSA Site Lead Contractor no later than 10 business days prior to requested delivery date. Site readiness shall address availability of temporary or permanent power; removal of obstacles to the rigging path; and adequacy of physical environmental conditions within the delivery area that meet EDS OEM standards for protecting the EDS units. The **CITY** shall provide secure storage for the EDS units and any ancillary screening equipment if site conditions at the time of delivery do not provide adequate protection. The **CITY** shall provide secure storage space for hardware associated with EDS integration and multiplexing until it can be installed by EDS OEM Integration Support Staff. Failure to meet these minimum requirements may result in reallocation of equipment to other sites, thus affecting the airport's overall project schedule.

2.1.2 Rigging Services

The **CITY** will be responsible for providing rigging path verification, ingress path, and/or structural analysis. If required, the Airport will remove and replace any walls, windows, glass, doors, or other physical barriers in support of rigging activities.

2.2 INSTALLATION SUPPORT

2.2.1 Power Requirements

The **CITY** will provide terminations to the EDS for electrical power. The **CITY** will be responsible for providing all infrastructure power requirements including separate metering. If applicable, the **CITY** will design and install all power requirements to terminal locations within the Checked Baggage Resolution Areas and at EDS locations. The **CITY** will provide cabling from terminations to EDS equipment. The **CITY** shall attest to the availability of power supply to adequately support the EDS and associated equipment in accordance with OEM specifications and be liable for damage to this equipment resulting from intentional deviations to accepted power supply conditions.

2.2.2 Commissioning Services

The **CITY** will be responsible for obtaining all other infrastructures not mentioned in Section 2.2.1 to support EDS operations and maintenance.

2.3 INTEGRATION SERVICES

The **CITY** shall ensure that the BHS Contractor coordinates with EDS OEM in support of integration activities (e.g. installation and testing the required software and hardware to allow for digital and serial communication between the EDS and the BHS PLC) as needed. Terminations to the EDS for BHS PLC communication shall be performed by the **CITY**.

2.4 NETWORKING

2.4.1. Network Infrastructure

The **CITY** will design and install all communication conduit, fiber, etc. as required by the EDS OEM's design criteria for the EDS and EDS networking system, including but not limited to connectivity of Checked Baggage Resolution Areas, TSA network control room, and BHS Control Room as required. Exact parameters will be reviewed at Project start-up by TSA.

The **CITY** will provide cabling and network patch panels in TSA control rooms, ETD search areas, and the TSA network room as determined by the network design conducted in conjunction with the **CITY**. The EDS OEM shall provide required patch cables and miscellaneous hardware to interface between network patch panel and EDS OEM-supplied networking components. The **CITY** will provide all electrical outlets to support installation and operation of a fully multiplexed explosive detection system.

2.4.2. Network Services

No other network may interface with the networked airport screening solution. The implemented assigned network for operation shall be an isolated, stand-alone network.

2.5. ACCEPTANCE - TESTING SUPPORT

The Project schedule shall allow for sufficient time to conduct mandatory testing of the EDS units after installation and integration. The Project schedule shall also factor in minimum lead times for notification of readiness for testing (7 days for SAT; 3 days for TRR; and at least 3 business days for ISAT). The **CITY** shall identify operational windows in time in which testing activities can be accomplished. Testing activities will be scheduled for normal 8-hour business days (Monday-Friday) and should not include holidays.

Testing activities shall also be scheduled such that test articles shall not be comingled either physically with Live Passenger Bags on existing or new screening systems or their electronic screening images shall not appear on consoles being used for Live Passenger Bag screening. Use of temporary networks or phased testing to accommodate the separation of Live Bags and Test Articles must be approved in writing through a RFV in advance of TRR/ISAT by the TSA RDC and TSA Acceptance Test Lead.

Requests for overtime or multiple shifts are discouraged and will only be considered based on compelling justification. The TSA RDC and TSA Acceptance Test Lead will review/evaluate any requests for phased testing (e.g. non-consecutive testing activities requiring multiple test team trips). Such requests must be in writing supported by compelling justification and submitted to the TSA RDC well in advance of SSTP development. Programming or mechanical changes made before ISAT (typically during Contractor pre-testing or TRR) must be documented and provided to the TSA RDC and Acceptance Test Contractor.

2.5.1 Site Specific Test Plan (SSTP)

The **CITY** shall ensure that information needed to develop an accurate SSTP is provided to TSA Test Acceptance Lead at the earliest opportunity, but no later than 120 days prior to the requested testing date. Required documentation includes:

  - Completed Site Survey Data Collection Checklist
- Any and All Approved Request for Variance (RFV)
- Basis of Design Report
- Sample BHS & CBIS Reports for all PGDS required Reports
- BHS & EDS Network Diagrams and Server Architecture
- Local Procedures for Fail-Safe, E-Stop, Jam Clearing and IQ Test Conduct
- Airport/Airline Bag Induction/Hygiene Procedures
- BHS Specifications
- Controls Description and/or Description of Operation (if both exist then provide both)
- Fail-safe and/or E-Stop Zone Drawings
- BHS Mechanical Plan and Elevation Drawings from Natural Induction Locations to & through the CBIS, CBRA and Make-up Locations with Conveyors labeled Plan View Drawings and Electrical Drawings of the BHS/CBIS with Control Station & Photoeye Locations and labeling. All drawings will be "Approved for Construction" by the Airport and not Pre-Bid or Bid Use Only versions.
- At least 1 Plan/Overview Drawing that shows the entire CBIS in a single view
  - Conveyor Motor Manifest to include not less than (Conveyor Name, Phase, Conveyor Type, Degree of Turn, Degree of Incline/Decline, Length, Speed in FPM, Motor HP, Control Type (VFD yes/no), Brake Type, Motor Type, drive Type, FLA Rating).
  - Installation & Commissioning Phasing Plan Narrative and Phasing Plan Drawings
- Construction and Testing Schedules provided through weekly and monthly meetings and reports prior to ISAT.

All drawings shall be clearly visible and readable when plotted on Arch D Size Stock. All documents shall be submitted electronically (e.g. text documents in MS Word or PDF and drawings in AutoCAD [.dwg] or PDF.)

Any system constraints that will prevent compliance with TSA testing and performance criteria must be disclosed in writing to TSA as far in advance as possible to allow for evaluation of applicable waivers. Any restrictions on system availability and accessibility for testing shall be disclosed. Cutover plans including any phasing plans that will affect the TSA Acceptance Test Contractor's ability to test the full system from ticket counters and curbside inductions (if applicable) through the outbound/sortation system shall also be disclosed to allow for the development of an accurate SSTP. Cutover plans that will result in multiple testing phases shall also be presented to the TSA RDC in writing for review and approval prior to the Test Coordination Meeting and no later than 30 days prior to ISAT.

The **CITY** will have the opportunity to review and comment on SSTP in advance of testing. Comments and/or questions should be directed to the TSA RDC and the TSA Site Lead Contractor.

2.5.2. Test Readiness Report (TRR)
This pre-ISAT activity is conducted by TSA Site Lead Contractor in coordination with the **CITY** (typically the BHS Contractor.) The purpose of this testing activity is to assure TSA of site readiness for ISAT and is a precursor for TSA authorization for TSA Acceptance Test Contractor to deploy. The **CITY** will be provided TRR data sheets by the TSA Site Lead Contractor.

BHS/CBIS configuration and operation shall be in final form intended for bag screening operations. Unless mutually agreed to, changes/improvements to BHS/CBIS between TRR and ISAT are not authorized. The **CITY** must address security and efficiency defects found during TRR and be prepared to implement mutually agreed upon corrective actions prior to ISAT.

Required input from the Project Team will include:

Functional Testing Documentation: Testing authentication must be clearly reported and show every test with bag ID and declared status on printed EDS FDRS (Field Data Reports) and on the printed Critical Tracking PEC Report (as required in PGDS Section 7.2.14) resulting bag destination. Ledger forms should show test date, type of test, identification of bag destination location, and ID number of the bags arriving at that location. These reports should be organized and indexed in an electronic media/file or loose-leaf binder(s)

- Each test shall conclude with an indication of successfully passing the required criteria of BHS specification and testing criteria and if conflict or failure exists, then so indicate with an explanation.
- Presentation of completed testing and TRR required documentation to TSA Site Lead not less than 7 business days prior to anticipated Pre-ISAT date is required.

System Mixed Bag Test and System Throughput Test Observation: Sufficient numbers of test bags (no less than 100 test bags per EDS) will be utilized to "stress" the BHS/CBIS as would occur during peak operating times. Test bag set profile should be similar to the TSA Acceptance Test Contractor's test bag profile.

- A real-time observation by TSA Site Lead Contractor of a global BHS/CBIS System Mixed Bag Test and System Throughput Test using clear and suspect bags is required.
- All EDS equipment must be operational.
- All baggage entry points must be utilized.

The TSA Site Lead Contractor or Acceptance Testing Contractor performs the TRR. If successful, a Test Readiness Notice is issued to the TSA RDC and the TSA Acceptance Test Contractor for ISAT deployment. If delivered by COB Monday through Wednesday (5:00 p.m. EST), ISAT deployment will occur the following Monday. If delivered any time Thursday through Sunday, ISAT deployment will occur on the second Monday. If changes are made to the system following TRR without prior coordination with TSA, ISAT testing shall be postponed pending submission of documentation for review and evaluation by TSA and its Acceptance Test Contractor (see paragraph 2.5.7)

2.5.3. Logistical Support Needs: The **CITY** shall identify and provide any logistical or support needs that will impact TRR and ISAT testing, to include:

- any process needed to obtain sufficient baggage tags should the system use IATA baggage tracking mechanisms, pier tags should the system use pier tags, or blank bag tags if the system does not use IATA baggage tracking mechanisms; Quantities of tags needed will be coordinated during the Site Survey Meeting and the SSTP review Meetings
- any process needed to obtain sufficient baggage tubs/totes (typically 20 per installed EDS)

- any process needed to obtain sufficient bag transportation devices (tugs, totes, carts, etc.) needed to move test articles in and around the CBIS, CBRA, laydown area and sort/claim devices
- any process needed to obtain safety training and/or General Contractor access for TSA Acceptance Test Contractor, as required"
- any process needed to obtain airport badges/access for TSA Acceptance Test Contractor personnel; and/or personnel escorts. Airport SIDA Badging Process shall not require more than 2 trips of test team personnel to the site, 1 work week maximum duration each, to obtain SIDA badges including fingerprinting, SIDA Training, testing, issuing and pickup.
- availability of BHSC and BHS Programmer to operate BHS during ISAT and provide support for ISAT Testing and diagnostic activities (BHS reports, investigations, and explanations to questions from the TSA Acceptance Test Contractor)
- provide baggage handling support for testing activities including bag loading, unloading, transport, fault recovery, during ISAT and TRR including movement between test and laydown/storage areas; and
- availability of support for delivery and secure and weather protected storage of TSA Acceptance Contractor test bags for ISAT (100 bags per EDS contained in 2 LD3s per 100 bags.)

2.5.4. ISAT Testing: The TSA Acceptance Test Contractor will meet with the **CITY** between 30 and 45 days prior to testing to coordinate the conduct of ISAT testing. The TSA Acceptance Test Lead and the **CITY** will finalize details relating to the scheduling and duration of the testing. (Generally allow one day of travel for ISAT Testing Team in and out; one day for Site Mobilization; one day per EDS Spur Line; one day per System Level Test (Dieback, Mixed Bag Sortation and Throughput; one day for demobilization and cleanup). It is recommended to schedule one to two additional days for unforeseen testing delays or contingences.

2.5.5. Test Results and Reports

The Airport shall report corrective actions to be applied and the timeline associated with deficiency corrections. Corrective actions shall address all defects identified in the TRR/TRN (pre-ISAT) or QLR (ISAT). TSA is not obligated to accept or operate a baggage screening system that does not meet the minimum test standards.

2.5.6. Operational Run-In

The Run-In period will extend for a minimum of 30 days from the start of substantial operations with cutover of substantial input and output lines. This period of time shall be discussed and agreed to by all parties during the SSTP development process, and reconfirmed at the completion of the ISAT. Substantial Operations shall normally be defined as when the CBIS is processing 85% or greater of its normal (not peak) operational daily load of "checked bags or luggage" for the time period at hand (i.e. not based on future dates of operation). This period shall also be dependent on resolution of deficiencies found during testing and Run-In. Once a week during the Run-In period, the Airport or their authorized representatives shall forward electronic versions of all CBIS Reports required by PGDS Chapter 7, Section 7.2.14. to the TSA Acceptance Testing Contractor. After receipt, review and analysis of at least 21 days of performance data, TSA and their Acceptance Test Contractor will deploy to the site in either the

4th or 5th week of Substantial Live Operations to physically verify closure of open deficiencies, and assess observe system operation against the data reported. The ILDT or their Contractors will also pull and provide the PLC Code for the same PLCs as provided at ISAT start. Based on the data analysis and physical observations, a recommendation will be made to TSA via a Test Summary Report (TSR) to end the Run-In period, extend the Run-In period, and/or change the operational status of the CBIS.

2.5.7. Post Commissioning Activities:
The TSA Site Lead Contractor will conduct 30-day operational run-in observations of the system following successful ISAT testing.

The Airport shall provide the TSA RDC a written response outlining corrective actions that will be taken due to outstanding deficiencies, issues, and action items identified in the Quick Look Report (QLR) and Test Summary Report within two (2) weeks of receipt of the QLR or TSR.

For the continued and secure operation of the CBIS, all changes to the BHS system that impact the CBIS operation during and after its initial commissioning must be reviewed, evaluated, and endorsed by TSA before they are implemented by the Airport. The Post-ISAT changes procedure must be provided in accordance with PGDS Appendix D. The procedure is to be followed for all changes to CBIS systems other than those required for normal routine and periodic maintenance/repairs to the BHS system. The Airport responsible for the BHS system shall assemble an information package for submittal to TSA RDC which includes the following minimum information.

- Written description of all proposed physical and programming changes to the BHS and CBIS system(s)
- Reason for proposed change(s)
- Anticipated impact to system operation (e.g. increased throughput, lowered tracking losses, elimination of bag jams)
- Drawings showing affected areas
- Any potential security, tracking or efficiency impacts, including impacts on TSA manpower or operations
- Testing procedures
- Proposed date of changes

A CBIS Configuration Change Request Form will be provided by TSA. This package shall be delivered to the local TSA FSD who shall review the package. The local TSA FSD shall add any comments he/she may have and forward the form to the following email address: OSTCBD@dhs.gov.

The TSA will review and analyze the efficacy and impact of these changes to determine if it may be necessary for TSA to re-certify the CBIS system(s). Once the review has been completed, TSA shall notify the local TSA FSD and the Airport with the TSA recommendation and testing requirements for the system changes,

APPENDIX C

Construction Milestone Schedule

Design & Construction Services Milestones	**[Dates to be included]**
Project Validated / Notice to Proceed (NTP)	
Design OTA Awarded	
Facility Modification OTA Awarded	
Pre-Design Deliverables Submitted	
Pre-Design Deliverables Approved	
Schematic Design Deliverables Submitted	
Schematic Design Deliverables Approved	
30% TSA Design Deliverables Submitted	
30% TSA Design Deliverables Approved	
70% TSA Design Deliverables Submitted	
70% TSA Design Deliverables Approved	
100% TSA Design Deliverables Submitted	
Final Construction Drawings Approved	
Facility Modification NTP (if applicable)	
Facility Modification Progress Meetings (reoccurring)	
Facility Modification Substantially Complete (if applicable)	
Site Assessment and Survey Report Submitted	
Site Installation Plan (SIP) Submitted	
SIP Approved	
EDS Delivered and Placed	
Site Acceptance Test (SAT) Passed	
Integrated Site Acceptance Test (iSAT) Test Readiness Review Complete (if applicable)	
iSAT Passed (if applicable)	
EDS Installation/Networking Start	
EDS Installation/Networking Finish	
EDS Decommissioned (if applicable)	
EDS Removal Start (if applicable)	
EDS Removal Finish (if applicable)	
Live Bag Screening (LBS) Start	
Record Dwgs / CAD As-Built Submitted	
TSA Final Sign-off of Project	
Final Invoice Submitted	
Project Completion Notification Submitted	
Project Finish / Contract Closeout	

APPENDIX D, SCHEDULE OF CONSTRUCTION DELIVERABLES

The following deliverables are required to be submitted by the **CITY**:

Item	Submitted To:	Frequency or Due Date
Design: pre-design, schematic, 30%, 100% to include detailed construction cost estimate	TSA Regional Deployment Coordinator	In accordance with the TSA PGDS.
EDS Delivery Schedule	TSA Regional Deployment Coordinator	NLT 30 Days after Construction Contract Award
Schedule of Values (Design, Construction, Baggage Handling Contracts)	TSA Regional Deployment Coordinator TSA Contracting Officer	Within 30 days after execution of the TSA Agreement or upon issuing Notice to Proceed to Contractor. To be updated on a monthly basis and submitted with the monthly report.
Copies of the Design and related Construction Contracts and Change Orders	TSA Regional Deployment Coordinator TSA Contracting Officer	Upon contract award. Change Orders affecting the CBIS Project require advance TSA approval.
Monthly Milestone and Project Status Report	TSA Regional Deployment Coordinator TSA Contracting Officer TSA Site Lead Contractor	By the 10th of each month. Electronic submission is requested if feasible.
Quarterly Project Financial Statement	TSA Regional Deployment Coordinator TSA Contracting Officer FinanceConfirm@tsa.dhs.gov	Quarterly upon execution of the OTA.
Summary report of Small Business/Disadvantage Business Enterprises utilization Report	TSA Contracting Officer	By September 30th each year and upon completion of the Project via email
CONSTRUCTION PHASE		
Mechanical and Electrical Shop Drawings	TSA Regional Deployment Coordinator TSA Site Lead Contractor	Upon completion by the **CITY**.
Close Out Process		
Close Out Process – Correction of testing deficiencies	Close Out Report submitted to TSA Regional Deployment Coordinator and TSA Site Lead Contractor	Airport responses within (2) weeks of receipt of QLR and TSR to address noted CBIS
Final Copy of PLC program	TSA Regional Deployment	No later than 30 days after

and software disaster recovery procedure in electronic format.	Coordinator	commissioning of system(s)
As Built Drawings in electronic format, .dwg (AutoCAD) or comparable format to include final description of operations; mechanical layouts, including belt speeds in CAD and PDF file format.	TSA Regional Deployment Coordinator	No later than 30 days after 30-day operational run-in period
Overview of drawings of the Matrix/Node, Resolution Room, OSR Room as applicable. dwg (AutoCAD) or comparable format	TSA Regional Deployment Coordinator	30 days after 30-day operational run-in period
Final Invoice	TSA Regional Deployment Coordinator TSA CO	No later than 90 days after final sign-off of system by TSA Deployment Manager, following successful operational run-in period and start of live bag screening
POST COMMISSIONING CHANGES		
CBIS Changes after Commissioning	OSTCBD@dhs.gov	See Post Commissioning Requirements, Appendix A, paragraph 2.5.7

The Monthly Milestone and Project Report are to be submitted by the 10th of each month. A draft Monthly report template will be submitted via separate correspondence. The Monthly Milestone and Project Report shall address the following:

a. Actual start and/or finish dates for updated/completed activities.
b. Remaining duration, required to complete each activity started, or scheduled to start, but not completed
c. The Project's progress to include Project Percent Completion; cost incurred and invoiced to date; a forecast the Project completion date and final costs; as well as monthly schedule and budget variances throughout the Project.
d. Percentage for completed and partially completed activities.
e. Any CO approved changes including but not limited to new activities, deleted activities, activity duration changes, and change in logic relationships between activities.
f. Status date for the schedule update.
g. A statement that identifies and describes any current or anticipated delays that includes the following information: identification of the delayed activity by description and activity code; type of delay; cause of the delay; effect of the delay on other activities, milestones, and completion dates; identification of actions needed to avoid or mitigate the delay.

h. Summary of cost incurred and invoiced to date.
i. Description of lessons learned
j. Construction Schedule in both PDF and "live"/usable format to depict the critical path, baseline and actual date information; predecessors/successors and shall be broken down to a minimum of three (3) WBS levels where applicable.

The construction schedule will be used for all planned TSA activities (delivery of equipment, scheduling of testing, etc).

APPENDIX E
STIP DATA REQUIREMENTS FOR CHECKED BAGGAGE SYSTEMS

The TSA HQ Office of Information Technology (OIT) and Security Technology Integrated Program (STIP) require STIP-enabled transportation security equipment (TSE) to have specific connections to securely and reliably network the equipment. Multiple parties play a role in this portion of Checked Baggage Inspection System (CBIS) specification and execution.

Roles and Responsibilities for Implementing STIP

As CBISs are recapitalized or optimized, the project owner's contractor will provide new telecommunications outlets and cables as needed to support new technology. If a CBIS reconfiguration is initiated as part of a recapitalization/optimization, safety effort, new technology deployment or any other CBIS redesign initiative, the CBIS contractor will be responsible for restoring the previous state of connectivity ("make whole"), including development of the scope of work (SOW). Implementation in the field will occur via the CBIS contractor. A working group, or Integrated Local Design Team (ILDT) must be formed consisting of representatives from the Airport Authority, FSD staff, OSC, OIT and STIP. The group should meet immediately via conference call once it has been determined that a CBIS is going to be recapitalized or optimized. This action will ensure that ALL aspects of the CBIS redesign have been identified and assigned to a specific group for action and funding. The ILDT will organize the working group members, develop, review and approve the SOW. The OIT Field Regional Manager (FRM) shall always be consulted when a CBIS redesign is initiated and will provide the necessary routing information to ensure the checked baggage systems are appropriately cabled to a networked TSA IT cabinet.

The IMAC Process

The IMAC Process is the mechanism by which TSA OIT will procure and install IT hardware (e.g. network switch) following the IT infrastructure build-out of a CBIS contractor. The OSC Regional Deployment Manager (RDM) shall be responsible for engaging OIT at project initiation and including the respective regional Field Relations Manager (FRM) throughout the construction process.

The IMAC process takes between 30 and 45 days and needs to be initiated to complete the following tasks:

- Procurement, configuration and shipment of IT hardware
- Installation of IT hardware
- Patch cabling of checked baggage equipment
- Validation of network connectivity for checked baggage equipment
- Validations of STIP EM sever registration for checked baggage equipment.

It is imperative to engage each team member as early as possible in order to avoid any gaps in IT services.

Specific Design Standards and Requirements

Two modular jacks consisting of a flush-mounted telecommunications outlet box plus/minus 10 feet from the equipment are required. Even though one is redundant, both terminations should be connected using Cat5e or Cat6 4-pair 100 ohm unshielded twisted pair (UTP) or screened twisted pair (ScTP) cable and terminated on the patch panel in the closest TSA IT cabinet. The data cable type should be based on the existing conditions at the Checked Baggage Inspection System (CBIS). The purpose of this connectivity is so that TSA HQ can review statistical data over the network from screening equipment for a particular airport and time period without having to go to the site.

Installation and/or relocation of Cat5e/Cat6 data cabling will meet or exceed the specifications listed in the TSA Structured Cabling System Guidelines dated July 2012 [Attached]. This document will be provided by the TSA to the ILDT.

In addition, the following requirements should be met:

- All ETDs and stand-alone EDSs will have 1 "dual telecommunications outlet".
- It is assumed that when a multiplex server is present, connectivity to TSANet will terminate at the multiplex server cabinet, therefore connectivity to TSANet for each EDS is not required.
- All core drilling will support a minimum of 4 "modular jacks".
- All new fiber installations will be multimode fibers, either multimode fiber, either 50/125 or 62.5/125 micron fibers r 50/125 or 62.5/125 micron fibers, six-strand bundles enclosed in inner duct.
- All cabinet installations require 2 110v 20A service.
- All cabinet installations will meet the local seismic rating requirements and can be floor/bracket mounted.
- All cabling outside of TSA controlled space must be in Rigid Metal Tubing (RMT) conduit. Any deviance will must be approved through existing RFV procedures.
- All newly installed and existing data jacks and associated patch panels must comply with TSA's approved scheme [see provided TSA Structured Cabling System Guidelines dated July 2012].
- Provide TSA completed Data Capture Sheet [Attached] and cable certification paperwork prior to established I-Sat date.

Figure 1 illustrates all of the equipment that must be connected to the Main Distribution Frame (MDF)/Intermediate Distribution Frame (IDF) IT cabinet for a stand-alone CBIS configuration. When the EDS are in a stand-alone configuration, each EDS must be connected to the patch panel.

Figure 1
STAND-ALONE CBIS CONFIGURATION

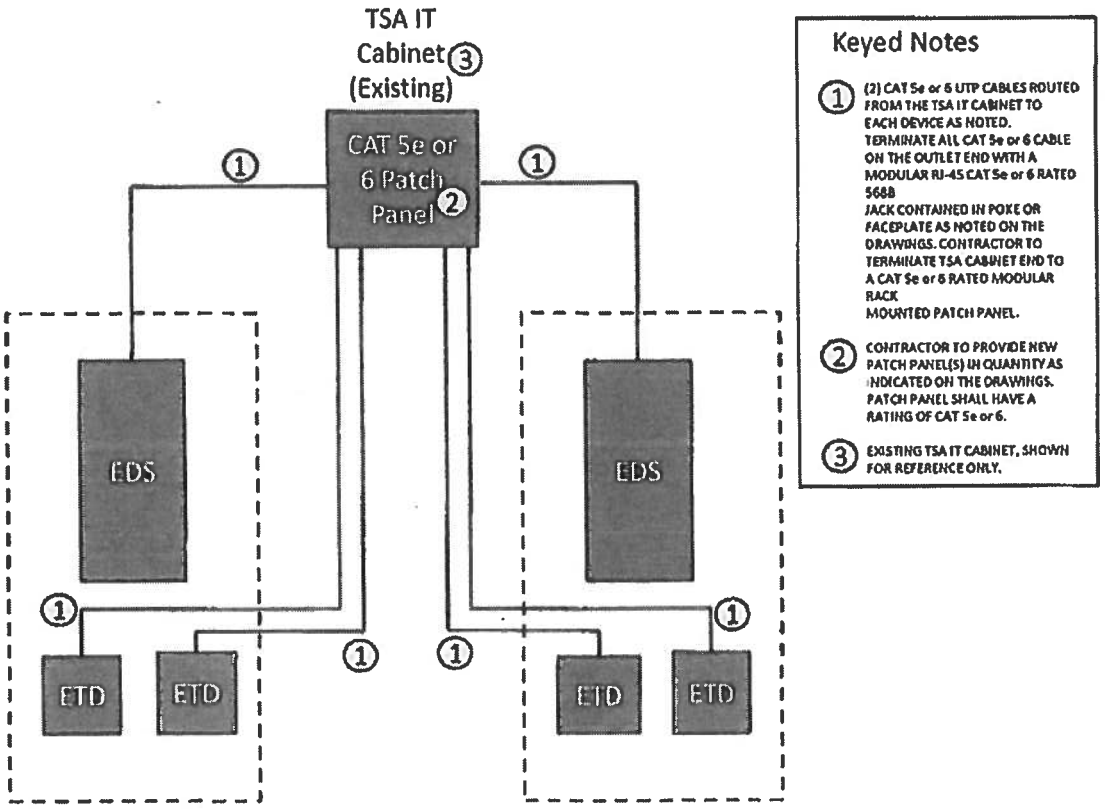

Figure 2 illustrates all of the equipment that must be connected to the IDF IT cabinet for a CBIS where the EDS machines are already networked together. When the EDS machines are networked together (i.e., MUX, NEDS, etc.), the connection only needs to be made to the EDS Network Server(s).

Figure 2
NETWORKED CBIS CONFIGURATION

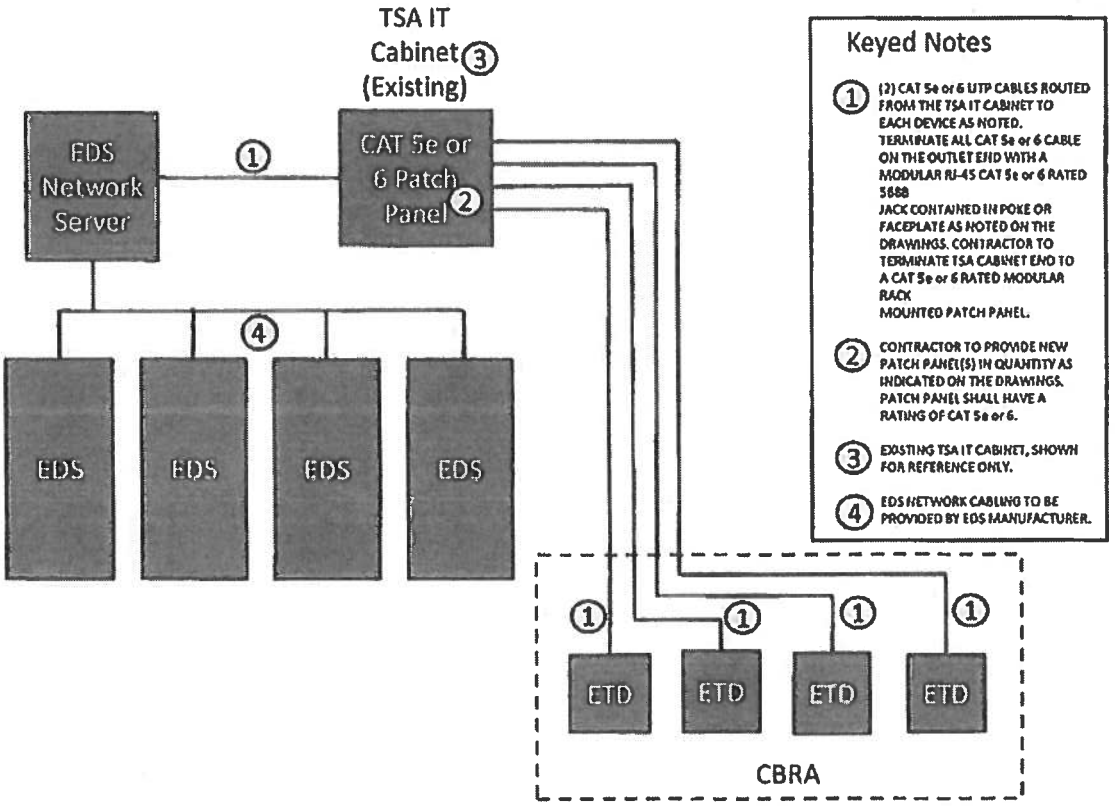

At a minimum, the following guidelines should be considered when designing a new CBIS or reconfiguring an existing CBIS.

- If an existing TSA IT cabinet is within 295 feet of the CBIS:
  - Verify that the existing switches have sufficient open ports to accommodate the required number of drops
  - Notify TSA OIT FRM if the existing switch capacity will not accommodate the required number of drops so that additional equipment can be procured.
  - Punch down cabling from the individual CBIS devices in the patch panel of the IT cabinet

- If there is no IT cabinet within 295 feet of the CBIS:
  - Install an appropriate IT cabinet. Refer to **Figure 3** for the IT cabinet specifications
  - Run fiber optic cable from the IT cabinet to an existing TSA IT cabinet
  - Notify TSA OIT FRM so that additional equipment can be procured.
  - Punch down cabling from the individual CBIS devices in the patch panel of the IT cabinet
  - Initiate IMAC group to install jumper cables from the patch panel to the switch and activate port

Figure 3
IT CABINET

Equipment	Size	Quantity	Power Requirements	IT Requirements	Additional Information
IT Cabinet	Size 24H 24.0"H x 27.3"W x 30.0"D Weight: 97 lbs	1 or more per checkpoint depending on size	For 24H, 36H and 48H • Dedicated • 30A, 125V, 3KVA/Cabinet • 2-Pole, 3-Wire Grounding • NEMA L5-30R Receptacle • 3KVA UPS • 8' power cord from the IT cabinet to the receptacle	• Size patch panels to accommodate all TSA data outlets at the checkpoint plus 100% spares, minimum • Size gigabit network switch to accommodate all data outlets in checkpoint plus 10% • Provide a minimum of four pair single mode fiber optic cable from IT cabinet to the TSA main distribution frame	• 30" front and rear access is required • These cabinets will receive all data communication lines from the SSCP, so the cabinet should be located as close to the SSCP as possible, but in a secure location. Careful consideration needs to be given to the IT cabinet location because the exhaust fan for cooling can be loud when located in a confined space with TSA or airport personnel • Equipment racks can be loaded into the cabinet from the front or the back at the location where the cabinet is installed. Although not required, side access would improve rack accessibility and TSA personnel mobility around the cabinet. • Refer to Program of Requirements dated July 2005, Section III-D for labeling, cable management and administration of IT cabinet. • Refer to Program of Requirements dated July 2005, Section III-D for acceptance testing of IT circuits. • Wall mounted cabinets are an option in some instances, but must adhere to all applicable local codes and standards. Recommend consultation with the Field Regional Manager (FRM) when considering a wall mounted alternative
	Size 36H 36.0"H x 27.3"W x 30.0"D Weight: 124 lbs				
	Size 48H 48.0"H x 27.3"W x 30.0"D Weight: 151 lbs				
	Size 60H 60.0"H x 27.3"W x 30.0"D Weight: 248 lbs		For 60H and 72H • Dedicated • 30A, 208V, 6KVA/Cabinet • 2-Pole, 3-Wire Grounding • NEMA L6-30R Receptacle • 6KVA UPS • 8' power cord from the IT cabinet to the receptacle		
	Size 72H 72.0"H x 27.3"W x 30.0"D Weight: 274 lbs				

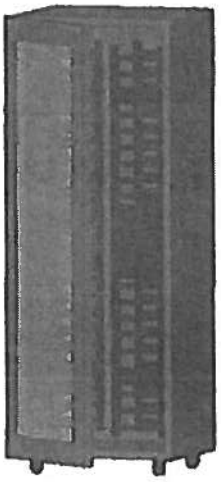

Isometric View

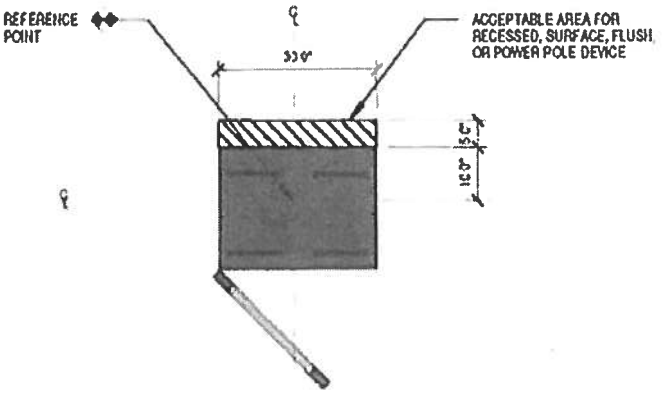

PLAN VIEW

EXHIBIT C-3

LIST OF SUPPLEMENTAL DOCUMENTS

EXHIBIT C-3: List of Supplemental Documents

Project Concept Document Number	Date Issued	Document Name
B02	8/15/2014	ATL EDS North Terminal Baggage System Drawing (Rev A)
B05	Jun-15	ATL EDS Recap 30% Revised Specifications – North 2015
B08	6/14/2013	ATL BOD TSA 30% Design North Terminal
B10	5/13/2013	TSA Response Request For Variance: PGDS EDS Published Alarm Rates (PRFV-ATL-RO-001)
B11	5/7/2013	TSA Response Request For Variance: PGDS TRI ratio of 1 TSO per 2 EDS (PRFV-ATL-RO-002)
B12	5/7/2013	TSA Response Request For Variance: PGDS Bag Length Confirmation (PRFV-ATL-RO-003)
B13	6/6/2013	TSA Response Request For Variance: PGDS EDS Redundancy Factor (PRFV-ATL-RO-004)
B14	None	Existing Hold Bag System Sketches showing locations of MUX, OSR and CBRA
B15	None	Uninterupted Power Supply (UPS) Cut Sheets
Reference Document Number	**Date Issued**	**Document Name**
R01	2/22/2013	Airport Recapitalization and Optimization Assessment: Main North Terminal (TSA)
R04	3/13/2013	Other Transaction Agreement Relating to ATL Checked Baggage Recapitalization Screening Design Services Project
R05	3/22/2013	Clarification on CTX-9800 Screening Rate and Development of ADPM Schedule (Letter to Mr. John Reed, TSA)
R06	4/26/2013	ATL Request For Variance: PGDS Published Alarm Rates (PRFV-ATL-RO-001)
R07	4/26/2013	ATL Request For Variance: PGDS TRI ratio of 1 TSO per 2 EDS (PRFV-ATL-RO-002)
R08	4/26/2013	ATL Request For Variance: PGDS Bag Length Confirmation (PRFV-ATL-RO-003
R09	4/26/2013	ATL Request For Variance: PGDS EDS Redundancy Factor (PRFV-ATL-RO-004)
R10	4/30/2013	ATL TSA Basis of Design (BOD) Pre-Design and Schematic North Terminal
R17	4/30/2014	284.50 Ricondo ATL TSA Recapitalization No._061413
R20	6/14/2013	ATL TSA Basis of Design (BOD) Pre-Design and Schematic North Terminal
R23a	Jun-13	ATL_30p_Spec_North_2013_06
R23b	Jun-14	ATL_30p_Spec_North_2014_06
R26	6/14/2013	ATL Description of Operations (DOO) TSA 30% Design North Terminal
R29	6/14/2013	ATL BHS Dynamic Simulation Modeling Results North Terminal
R32	6/14/2013	EDS MDI CTX 9800 DSiT CTX 5800T BHS Interface Guide
R33	6/14/2013	EDS MDI CTX 9800 Interface Guide
R34	7/12/2013	CTX 9800 Site Planning Guide 963074-1B

Reference Document Number	Date Issued	Document Name
R35	6/14/2013	ATL TIM #6 CAGE Meeting Minutes 5-01-2013
R36	7/15/2013	MEP_Phasing_Terminal North
R39	7/12/2013	MDI CTX 9800 DSi SEIO TS_MQ
R40	7/15/2013	CTX 9800 Site Design Planning Guide 962431-1C
R41	7/1/2013	ATL CBIS DL Response 7012013
R43	7/12/2013	284.50-North-30% Resubmittal-071213
R45	7/12/2013	ATL Stakeholder meeting North Terminal 6-27-2013
R47	7/17/2013	ATL EDS Recap North – TSA Design Review Rebuttal Comments
R50	9/26/2013	OTA ATL Checked Baggage Recap Screening Construction Services Project 1141
R51	7/17/2013	ATL EDS Recap North – TSA Design Review Rebuttal Comments Letter
R54	4/15/2014	Copy of ATL Recap Variables
R55	3/6/2014	M&P Bound Draft 03062014
R56	3/6/2014	Electrical Bound Draft 03062014 pages 1-4
R56.1	3/6/2014	Electrical Bound Draft 03062014 pages 5-8
R57	5/6/2014	ATL EDS Recap Mechanical Plumbing Narrative (DRAFT)
R57.1	5/22/2014	ATL EDS Recap Electrical Scope Narrative (DRAFT)
R67	8/15/2014	2014-08-13 Electrical Scope Narrative
R68	8/15/2014	2014-08-13 Mechanical Plumbing Narrative
R71	8/15/2014	E1-N-101 Existing Floor Plan Concourse E Electrical
R72	8/15/2014	E1-N-102 New Floor Plan Concourse E Electrical
R76	8/15/2014	E2-NS-101 Electrical Riser Diagram
R77	8/15/2014	M1-N-102 New Floor Plan Terminal Mechanical North
R78	8/15/2014	M1-N-102 New Floor Plan Terminal Mechanical North-1
R80	8/15/2014	P1-N-102 New Floor Plan Terminal Plumbing North
R82	9/30/2014	ATL North Terminal TSA Milestone Appx C Rev 1C 093014

EXHIBIT C-4

REQUIRED CONTRACT PROVISIONS FOR FEDERAL REIMBURSABLE CONTRACTS

FAA
Airports

Required Contract Provisions for Airport Improvement Program and for Obligated Sponsors

Contents

1. REQUIRED CONTRACT PROVISIONS 3
2. ACCESS TO RECORDS AND REPORTS. (Reference: 2 CFR § 200.326, 2 CFR § 200.333) 4
3. AFFIRMATIVE ACTION REQUIREMENT. (Reference: 41 CFR part 60-4, Executive Order 11246) 5
4. BREACH OF CONTRACT TERMS. (Reference 2 CFR § 200 Appendix II(A)) 7
5. BUY AMERICAN PREFERENCE. (Reference: 49 USC § 50101) 8
6. CIVIL RIGHTS - GENERAL. (Reference: 49 USC § 47123) 13
7. CIVIL RIGHTS – TITLE VI ASSURANCES. 14
8. CLEAN AIR AND WATER POLLUTION CONTROL. (Reference: 49 CFR § 18.36(i)(12)) Note, when the DOT adopts 2 CFR 200, this reference will change to 2 CFR § 200 Appendix II(G)) 17
9. CONTRACT WORKHOURS AND SAFETY STANDARDS ACT REQUIREMENTS. (Reference: 2 CFR § 200 Appendix II (E)) 18
10. COPELAND "ANTI-KICKBACK" ACT (Reference: 2 CFR § 200 Appendix II(D), 29 CFR parts 3 & 5) 20
11. DAVIS-BACON REQUIREMENTS. (Reference: 2 CFR § 200 Appendix II(D)) 21
12. DEBARMENT AND SUSPENSION (NON-PROCUREMENT). (Reference: 2 CFR part 180 (Subpart C), 2 CFR part 1200, DOT Order 4200.5 DOT Suspension & Debarment Procedures & Ineligibility) 28
13. DISADVANTAGED BUSINESS ENTERPRISE. (Reference: 49 CFR part 26) 29
14. ENERGY CONSERVATION REQUIREMENTS. (Reference 2 CFR § 200 Appendix II(H)) 30
15. EQUAL OPPORTUNITY CLAUSE AND SPECIFICATIONS. (Reference 41 CFR § 60-1.4, Executive Order 11246) ... 31
16. FEDERAL FAIR LABOR STANDARDS ACT (FEDERAL MINIMUM WAGE) (Reference: 29 USC § 201, et seq.) 38
17. LOBBYING AND INFLUENCING FEDERAL EMPLOYEES. (Reference: 49 CFR part 20, Appendix A) 39
18. NONSEGREGATED FACILITIES REQUIREMENT. (Reference: 41 CFR § 60-1.8) 40
19. OCCUPATIONAL SAFETY AND HEALTH ACT OF 1970 (Reference 20 CFR part 1910) 42
20. RIGHT TO INVENTIONS. (Reference 2 CFR § 200 Appendix II(F)) 43
21. TERMINATION OF CONTRACT. (Reference 2 CFR § 200 Appendix II(B)) 44
22. TRADE RESTRICTION (Reference: 49 CFR part 30) 45

23. TEXTING WHEN DRIVING (References: Executive Order 13513, and DOT Order 3902.10) 47
24. VETERAN'S PREFERENCE (Reference: 49 USC § 47112(c)) 48

1. REQUIRED CONTRACT PROVISIONS.

1.1 OBLIGATIONS

The contractor must:

1) Insert these contract provisions, as applicable, in each contract and subcontract, and further require that the clauses be included in all subcontracts;

2) Require subcontractors to incorporate applicable requirements of these contract provisions by reference for work done under any purchase orders, rental agreements and other agreements for supplies or services;

3) Be responsible for compliance with these contract provisions by any subcontractor, lower-tier subcontractor or service provider; and

4) Not modify the provisions.

Subject to the applicability criteria noted in the specific contract provisions, these contract provisions apply to all work performed on the contract.

1.2 FAILURE TO COMPLY WITH PROVISIONS.

Failure to comply with the terms of these contract provisions may be sufficient grounds to:

1) Withhold progress payments or final payment,

2) Terminate the contract,

3) Seek suspension/debarment, or

4) Any other action determined to be appropriate by the sponsor or the FAA.

2. ACCESS TO RECORDS AND REPORTS.

(Reference: 2 CFR § 200.326, 2 CFR § 200.333)

2.1. APPLICABILITY.

Applies to all AIP-funded projects and must be included in all contracts and subcontracts.

2.2. MANDATORY CONTRACT LANGUAGE.

The mandatory language that must be used on AIP funded project contracts is as follows:

ACCESS TO RECORDS AND REPORTS

The Contractor must maintain an acceptable cost accounting system. The Contractor agrees to provide the Sponsor, the Federal Aviation Administration, and the Comptroller General of the United States or any of their duly authorized representatives access to any books, documents, papers, and records of the contractor which are directly pertinent to the specific contract for the purpose of making audit, examination, excerpts and transcriptions. The Contractor agrees to maintain all books, records and reports required under this contract for a period of not less than three years after final payment is made and all pending matters are closed.

3. AFFIRMATIVE ACTION REQUIREMENT.

(Reference: 41 CFR part 60-4, Executive Order 11246)

3.1. APPLICABILITY.

Incorporate in all AIP-funded construction contracts and subcontracts that exceed $10,000.

3.2. MANDATORY CONTRACT LANGUAGE.

NOTICE OF REQUIREMENT FOR AFFIRMATIVE ACTION

1. The Offeror's or Bidder's attention is called to the "Equal Opportunity Clause" and the "Standard Federal Equal Employment Opportunity Construction Contract Specifications" set forth herein.

2. The goals and timetables for minority and female participation, expressed in percentage terms for the contractor's aggregate workforce in each trade on all construction work in the covered area, are as follows:

A. Timetables
B. Goals for minority participation for each trade (Vol. 45 Federal Register pg. 65984 10/3/80)
C. Goals for female participation in each trade (6.9%)

These goals are applicable to all of the contractor's construction work (whether or not it is Federal or federally-assisted) performed in the covered area. If the contractor performs construction work in a geographical area located outside of the covered area, it shall apply the goals established for such geographical area where the work is actually performed. With regard to this second area, the contractor is also subject to the goals for both federally funded and non-federally funded construction regardless of the percentage of federal participation in funding.

The contractor's compliance with the Executive Order and the regulations in 41 CFR Part 60-4 shall be based on its implementation of the Equal Opportunity Clause, specific affirmative action obligations required by the specifications set forth in 41 CFR 60-4.3(a), and its efforts to meet the goals. The hours of minority and female employment and training shall be substantially uniform throughout the length of the contract, and in each trade, and the contractor shall make a good faith effort to employ minorities and women evenly on each of its projects. The transfer of minority or female employees or trainees from contractor to contractor or from project to project, for the sole purpose of meeting the contractor's goals, shall be a violation of the contract, the Executive Order, and the regulations in 41 CFR Part 60-4. Compliance with the goals will be measured against the total work hours performed.

3. The contractor shall provide written notification to the Director, Office of Federal Contract Compliance Programs (OFCCP), within 10 working days of award of any construction subcontract in excess of $10,000 at any tier for construction work under the contract resulting from this solicitation. The notification shall list the name, address, and telephone number of the subcontractor; employer identification number of the subcontractor; estimated dollar amount of the subcontract; estimated

starting and completion dates of subcontract; and the geographical area in which the subcontract is to be performed.

4. As used in this notice and in the contract resulting from this solicitation, the "covered area" is [insert description of the geographical areas where the contract is to be performed giving the state, county, and city, if any].

3.3. AFFIRMATIVE ACTION PLAN.

The Department of Labor is responsible for administering the Executive Order 11246, which contains requirements for an Affirmative Action Plan. This Plan is similar in content and requirements to the affirmative action plan required in 49 CFR Part 152 subpart e. 49 CFR Part 152 applied to grants issued under the Airport Development Aid Program, which was replaced by the Airport Improvement Program.

4. BREACH OF CONTRACT TERMS.

(Reference 2 CFR § 200 Appendix II(A))

4.1. APPLICABILITY.

This provision is required in all contracts that exceed the simplified acquisition threshold. This threshold, fixed at 41 USC 403(11), is presently set at $100,000.

4.2. MANDATORY CONTRACT LANGUAGE.

The regulation does not prescribe mandatory language, however the following clause represents sample language that meets the intent of 2 CFR § 200 Appendix II(A). This provision requires grantees to incorporate administrative, contractual or legal remedies in instances where contractors violate or breach contract terms.

BREACH OF CONTRACT TERMS

Any violation or breach of terms of this contract on the part of the contractor or its subcontractors may result in the suspension or termination of this contract or such other action that may be necessary to enforce the rights of the parties of this agreement. The duties and obligations imposed by the Contract Documents and the rights and remedies available thereunder are in addition to, and not a limitation of, any duties, obligations, rights and remedies otherwise imposed or available by law.

5. BUY AMERICAN PREFERENCE.
(Reference: 49 USC § 50101)

5.1. APPLICABILITY.

The sponsor must meet the Buy American preference requirements found in 49 USC § 50101 in all AIP-funded projects. The Buy America requirements flow down from the sponsor to first tier contractors, who are responsible for ensuring that lower tier contractors and subcontractors are in compliance.

5.2. REQUIREMENTS.

The Buy-American preference requirements established within 49 USC § 50101 require that all steel and manufactured goods used on AIP projects must be produced in the United States. It also gives the FAA the ability to issue a waiver to the sponsor to use other materials on the AIP funded project. The FAA requires that these waivers be requested in advance of use of the materials on the AIP funded project. The sponsor may request that the FAA issue a waiver from the Buy American preference requirements if the FAA finds that:

1) applying the provision is not in the public interest;

2) the steel or manufactured goods are not available in sufficient quantity or quality in the United States;

3) the cost of components and subcomponents produced in the United States is more than 60 percent of the total components of a facility or equipment, and final assembly has taken place in the United States. Items that have an FAA standard specification item number (such as specific airport lighting equipment) is considered the equipment in this case. For construction of a facility, the application of this subsection is determined after bid opening; or

4) applying this provision would increase the cost of the overall project by more than 25 percent.

5.3. NATIONAL BUY AMERICAN WAIVERS WEBSITE.

The FAA Office of Airports maintains a list of equipment that has received waivers from the Buy American preference requirements on the http://www.faa.gov/airports/aip/buy_american/ website. Products listed on the Nationwide Buy American Waivers Issued list do not require a project specific Buy American preference requirement waiver from the FAA.

5.4. MANDATORY CONTRACT LANGUAGE.

The mandatory language that must be used on AIP funded project contracts is as follows:

BUY AMERICAN CERTIFICATION

The contractor agrees to comply with 49 USC § 50101, which provides that Federal funds may not be obligated unless all steel and manufactured goods used in AIP-funded projects are produced in the United States, unless the FAA has issued a waiver for the product; the product is listed as an Excepted Article, Material Or Supply in Federal Acquisition Regulation subpart 25.108; or is included in the FAA Nationwide Buy American Waivers Issued list.

A bidder or offeror must submit the appropriate Buy America certification (below) with all bids or offers on AIP funded projects. Bids or offers that are not accompanied by a completed Buy America certification must be rejected as nonresponsive.

Type of Certification is based on Type of Project:

There are two types of Buy American certifications.

- For projects for a facility, the Certificate of Compliance Based on Total Facility (Terminal or Building Project) must be submitted.
- For all other projects, the Certificate of Compliance Based on Equipment and Materials Used on the Project (Non-building construction projects such as runway or roadway construction; or equipment acquisition projects) must be submitted.

*****

Certificate of Buy American Compliance for Total Facility

(Buildings such as Terminal, SRE, ARFF, etc.)

As a matter of bid responsiveness, the bidder or offeror must complete, sign, date, and submit this certification statement with their proposal. The bidder or offeror must indicate how they intend to comply with 49 USC § 50101 by selecting one of the following certification statements. These statements are mutually exclusive. Bidder must select one or the other (i.e. not both) by inserting a checkmark (✓) or the letter "X".

☐ Bidder or offeror hereby certifies that it will comply with 49 USC. 50101 by:

a) Only installing steel and manufactured products produced in the United States; or
b) Installing manufactured products for which the FAA has issued a waiver as indicated by inclusion on the current FAA Nationwide Buy American Waivers Issued listing; or
c) Installing products listed as an Excepted Article, Material or Supply in Federal Acquisition Regulation Subpart 25.108.

By selecting this certification statement, the bidder or offeror agrees:

1. To provide to the Owner evidence that documents the source and origin of the steel and manufactured product.
2. To faithfully comply with providing US domestic products

3. To refrain from seeking a waiver request after establishment of the contract, unless extenuating circumstances emerge that the FAA determines justified.

☐ The bidder or offeror hereby certifies it cannot comply with the 100% Buy American Preferences of 49 USC § 50101(a) but may qualify for either a Type 3 or Type 4 waiver under 49 USC § 50101(b). By selecting this certification statement, the apparent bidder or offeror with the apparent low bid agrees:

1. To the submit to the Owner within 15 calendar days of the bid opening, a formal waiver request and required documentation that support the type of waiver being requested.
2. That failure to submit the required documentation within the specified timeframe is cause for a non-responsive determination may results in rejection of the proposal.
3. To faithfully comply with providing US domestic products at or above the approved US domestic content percentage as approved by the FAA.
4. To furnish US domestic product for any waiver request that the FAA rejects.
5. To refrain from seeking a waiver request after establishment of the contract, unless extenuating circumstances emerge that the FAA determines justified.

Required Documentation

Type 3 Waiver - The cost of components and subcomponents produced in the United States is more that 60% of the cost of all components and subcomponents of the "facility". The required documentation for a type 3 waiver is:

a) Listing of all manufactured products that are not comprised of 100% US domestic content (Excludes products listed on the FAA Nationwide Buy American Waivers Issued listing and products excluded by Federal Acquisition Regulation Subpart 25.108; products of unknown origin must be considered as non-domestic products in their entirety)
b) Cost of non-domestic components and subcomponents, excluding labor costs associated with final assembly and installation at project location.
c) Percentage of non-domestic component and subcomponent cost as compared to total "facility" component and subcomponent costs, excluding labor costs associated with final assembly and installation at project location.

Type 4 Waiver – Total cost of project using US domestic source product exceeds the total project cost using non-domestic product by 25%. The required documentation for a type 4 of waiver is:

a) Detailed cost information for total project using US domestic product
b) Detailed cost information for total project using non-domestic product

False Statements: Per 49 USC § 47126, this certification concerns a matter within the jurisdiction of the Federal Aviation Administration and the making of a false, fictitious or fraudulent certification may render the maker subject to prosecution under Title 18, United States Code.

Date	Signature
Company Name	Title

* * * * *

Certificate of Buy American Compliance for Manufactured Products

(Non-building construction projects, equipment acquisition projects)

As a matter of bid responsiveness, the bidder or offeror must complete, sign, date, and submit this certification statement with their proposal. The bidder or offeror must indicate how they intend to comply with 49 USC § 50101 by selecting one on the following certification statements. These statements are mutually exclusive. Bidder must select one or the other (not both) by inserting a checkmark (✓) or the letter "X".

☐ Bidder or offeror hereby certifies that it will comply with 49 USC § 50101 by:

a) Only installing steel and manufactured products produced in the United States, or;
b) Installing manufactured products for which the FAA has issued a waiver as indicated by inclusion on the current FAA Nationwide Buy American Waivers Issued listing, or;
c) Installing products listed as an Excepted Article, Material or Supply in Federal Acquisition Regulation Subpart 25.108.

By selecting this certification statement, the bidder or offeror agrees:

1. To provide to the Owner evidence that documents the source and origin of the steel and manufactured product.
2. To faithfully comply with providing US domestic product
3. To furnish US domestic product for any waiver request that the FAA rejects
4. To refrain from seeking a waiver request after establishment of the contract, unless extenuating circumstances emerge that the FAA determines justified.

☐ The bidder or offeror hereby certifies it cannot comply with the 100% Buy American Preferences of 49 USC § 50101(a) but may qualify for either a Type 3 or Type 4 waiver under 49 USC § 50101(b). By selecting this certification statement, the apparent bidder or offeror with the apparent low bid agrees:

1. To the submit to the Owner within 15 calendar days of the bid opening, a formal waiver request and required documentation that support the type of waiver being requested.

2. That failure to submit the required documentation within the specified timeframe is cause for a non-responsive determination may result in rejection of the proposal.
3. To faithfully comply with providing US domestic products at or above the approved US domestic content percentage as approved by the FAA.
4. To refrain from seeking a waiver request after establishment of the contract, unless extenuating circumstances emerge that the FAA determines justified.

Required Documentation

Type 3 Waiver - The cost of the item components and subcomponents produced in the United States is more that 60% of the cost of all components and subcomponents of the "item". The required documentation for a type 3 waiver is:

a) Listing of all product components and subcomponents that are not comprised of 100% US domestic content (Excludes products listed on the FAA Nationwide Buy American Waivers Issued listing and products excluded by Federal Acquisition Regulation Subpart 25.108; products of unknown origin must be considered as non-domestic products in their entirety)
b) Cost of non-domestic components and subcomponents, excluding labor costs associated with final assembly at place of manufacture.
c) Percentage of non-domestic component and subcomponent cost as compared to total "item" component and subcomponent costs, excluding labor costs associated with final assembly at place of manufacture.

Type 4 Waiver – Total cost of project using US domestic source product exceeds the total project cost using non-domestic product by 25%. The required documentation for a type 4 of waiver is:

a) Detailed cost information for total project using US domestic product
b) Detailed cost information for total project using non-domestic product

False Statements: Per 49 USC § 47126, this certification concerns a matter within the jurisdiction of the Federal Aviation Administration and the making of a false, fictitious or fraudulent certification may render the maker subject to prosecution under Title 18, United States Code.

Date	Signature
Company Name	Title

6. CIVIL RIGHTS - GENERAL.

(Reference: 49 USC § 47123)

6.1. APPLICABILITY.

The General Civil Rights Provisions found in 49 USC § 47123, derived from the Airport and Airway Improvement Act of 1982, Section 520, apply to all AIP-funded projects. This provision is in addition to the Civil Rights – Title VI provisions.

6.2. MANDATORY CONTRACT LANGUAGE.

The mandatory language that must be used on AIP funded project contracts is as follows:

GENERAL CIVIL RIGHTS PROVISIONS

The contractor agrees that it will comply with pertinent statutes, Executive Orders and such rules as are promulgated to ensure that no person shall, on the grounds of race, creed, color, national origin, sex, age, or handicap be excluded from participating in any activity conducted with or benefiting from Federal assistance.

This provision binds the contractors from the bid solicitation period through the completion of the contract. This provision is in addition to that required of Title VI of the Civil Rights Act of 1964.

This provision also obligates the tenant/concessionaire/lessee or its transferee for the period during which Federal assistance is extended to the airport through the Airport Improvement Program, except where Federal assistance is to provide, or is in the form of personal property; real property or interest therein; structures or improvements thereon.

In these cases the provision obligates the party or any transferee for the longer of the following periods:

(a) the period during which the property is used by the airport sponsor or any transferee for a purpose for which Federal assistance is extended, or for another purpose involving the provision of similar services or benefits; or

(b) the period during which the airport sponsor or any transferee retains ownership or possession of the property.

7. CIVIL RIGHTS – TITLE VI ASSURANCES.

7.1. APPLICABILITY.

The Sponsor must insert the **Title VI required contract clause** and the **Title VI list of Pertinent Nondiscrimination Statutes and Authorities** in every contract or agreement, unless the sponsor has determined and the FAA has agreed, that the contract or agreement is not subject to the nondiscrimination Acts and the Regulations.

7.2. MANDATORY CONTRACT LANGUAGE.

7.2.1. Title VI Clauses for Compliance with Nondiscrimination Requirements

(Source: Appendix A of Appendix 4 of FAA Order 1400.11, Nondiscrimination in Federally-Assisted Programs at the Federal Aviation Administration)

Compliance with Nondiscrimination Requirements

During the performance of this contract, the contractor, for itself, its assignees, and successors in interest (hereinafter referred to as the "contractor") agrees as follows:

1. **Compliance with Regulations:** The contractor (hereinafter includes consultants) will comply with the **Title VI List of Pertinent Nondiscrimination Statutes and Authorities**, as they may be amended from time to time, which are herein incorporated by reference and made a part of this contract.

2. **Non-discrimination:** The contractor, with regard to the work performed by it during the contract, will not discriminate on the grounds of race, color, or national origin in the selection and retention of subcontractors, including procurements of materials and leases of equipment. The contractor will not participate directly or indirectly in the discrimination prohibited by the Acts and the Regulations, including employment practices when the contract covers any activity, project, or program set forth in Appendix B of 49 CFR part 21.

3. **Solicitations for Subcontracts, Including Procurements of Materials and Equipment:** In all solicitations, either by competitive bidding, or negotiation made by the contractor for work to be performed under a subcontract, including procurements of materials, or leases of equipment, each potential subcontractor or supplier will be notified by the contractor of the contractor's obligations under this contract and the Acts and the Regulations relative to Non-discrimination on the grounds of race, color, or national origin.

4. **Information and Reports:** The contractor will provide all information and reports required by the Acts, the Regulations, and directives issued pursuant thereto and will permit access to its books, records, accounts, other sources of information, and its facilities as may be determined by the sponsor or the Federal Aviation Administration to be pertinent to ascertain compliance with such Acts, Regulations, and instructions. Where any information required of a contractor is in the

exclusive possession of another who fails or refuses to furnish the information, the contractor will so certify to the sponsor or the Federal Aviation Administration, as appropriate, and will set forth what efforts it has made to obtain the information.

5. **Sanctions for Noncompliance:** In the event of a contractor's noncompliance with the Non-discrimination provisions of this contract, the sponsor will impose such contract sanctions as it or the Federal Aviation Administration may determine to be appropriate, including, but not limited to:

    a. Withholding payments to the contractor under the contract until the contractor complies; and/or

    b. Cancelling, terminating, or suspending a contract, in whole or in part.

6. **Incorporation of Provisions:** The contractor will include the provisions of paragraphs one through six in every subcontract, including procurements of materials and leases of equipment, unless exempt by the Acts, the Regulations and directives issued pursuant thereto. The contractor will take action with respect to any subcontract or procurement as the sponsor or the Federal Aviation Administration may direct as a means of enforcing such provisions including sanctions for noncompliance. Provided, that if the contractor becomes involved in, or is threatened with litigation by a subcontractor, or supplier because of such direction, the contractor may request the sponsor to enter into any litigation to protect the interests of the sponsor. In addition, the contractor may request the United States to enter into the litigation to protect the interests of the United States.

7.2.2. Title VI List of Pertinent Nondiscrimination Authorities

(Source: Appendix E of Appendix 4 of FAA Order 1400.11, Nondiscrimination in Federally-Assisted Programs at the Federal Aviation Administration)

During the performance of this contract, the contractor, for itself, its assignees, and successors in interest (hereinafter referred to as the "contractor") agrees to comply with the following non-discrimination statutes and authorities; including but not limited to:

- Title VI of the Civil Rights Act of 1964 (42 U.S.C. § 2000d *et seq.*, 78 stat. 252), (prohibits discrimination on the basis of race, color, national origin);
- 49 CFR part 21 (Non-discrimination In Federally-Assisted Programs of The Department of Transportation—Effectuation of Title VI of The Civil Rights Act of 1964);
- The Uniform Relocation Assistance and Real Property Acquisition Policies Act of 1970, (42 U.S.C. § 4601), (prohibits unfair treatment of persons displaced or whose property has been acquired because of Federal or Federal-aid programs and projects);

- Section 504 of the Rehabilitation Act of 1973, (29 U.S.C. § 794 *et seq.*), as amended, (prohibits discrimination on the basis of disability); and 49 CFR part 27;
- The Age Discrimination Act of 1975, as amended, (42 U.S.C. § 6101 *et seq.*), (prohibits discrimination on the basis of age);
- Airport and Airway Improvement Act of 1982, (49 USC § 471, Section 47123), as amended, (prohibits discrimination based on race, creed, color, national origin, or sex);
- The Civil Rights Restoration Act of 1987, (PL 100-209), (Broadened the scope, coverage and applicability of Title VI of the Civil Rights Act of 1964, The Age Discrimination Act of 1975 and Section 504 of the Rehabilitation Act of 1973, by expanding the definition of the terms "programs or activities" to include all of the programs or activities of the Federal-aid recipients, sub-recipients and contractors, whether such programs or activities are Federally funded or not);
- Titles II and III of the Americans with Disabilities Act of 1990, which prohibit discrimination on the basis of disability in the operation of public entities, public and private transportation systems, places of public accommodation, and certain testing entities (42 U.S.C. §§ 12131 – 12189) as implemented by Department of Transportation regulations at 49 CFR parts 37 and 38;
- The Federal Aviation Administration's Non-discrimination statute (49 U.S.C. § 47123) (prohibits discrimination on the basis of race, color, national origin, and sex);
- Executive Order 12898, Federal Actions to Address Environmental Justice in Minority Populations and Low-Income Populations, which ensures non-discrimination against minority populations by discouraging programs, policies, and activities with disproportionately high and adverse human health or environmental effects on minority and low-income populations;
- Executive Order 13166, Improving Access to Services for Persons with Limited English Proficiency, and resulting agency guidance, national origin discrimination includes discrimination because of limited English proficiency (LEP). To ensure compliance with Title VI, you must take reasonable steps to ensure that LEP persons have meaningful access to your programs (70 Fed. Reg. at 74087 to 74100);
- Title IX of the Education Amendments of 1972, as amended, which prohibits you from discriminating because of sex in education programs or activities (20 U.S.C. 1681 et seq).

8. CLEAN AIR AND WATER POLLUTION CONTROL.

(Reference: 49 CFR § 18.36(i)(12)) Note, when the DOT adopts 2 CFR 200, this reference will change to 2 CFR § 200 Appendix II(G))

8.1. APPLICABILITY.

Incorporate in all professional service agreements, construction contracts and subcontracts that exceed $100,000. (Note that the 2 CFR 200 will raise this level to $150,000)

8.2. MANDATORY CONTRACT LANGUAGE.

CLEAN AIR AND WATER POLLUTION CONTROL

Contractors and subcontractors agree:

1. That any facility to be used in the performance of the contract or subcontract or to benefit from the contract is not listed on the Environmental Protection Agency (EPA) List of Violating Facilities;

2. To comply with all the requirements of Section 114 of the Clean Air Act, as amended, 42 U.S.C. 1857 et seq. and Section 308 of the Federal Water Pollution Control Act, as amended, 33 U.S.C. 1251 et seq. relating to inspection, monitoring, entry, reports, and information, as well as all other requirements specified in Section 114 and Section 308 of the Acts, respectively, and all other regulations and guidelines issued thereunder;

3. That, as a condition for the award of this contract, the contractor or subcontractor will notify the awarding official of the receipt of any communication from the EPA indicating that a facility to be used for the performance of or benefit from the contract is under consideration to be listed on the EPA List of Violating Facilities;

4. To include or cause to be included in any construction contract or subcontract which exceeds $100,000 the aforementioned criteria and requirements.

9. CONTRACT WORKHOURS AND SAFETY STANDARDS ACT REQUIREMENTS. (Reference: 2 CFR § 200 Appendix II (E))

9.1. APPLICABILITY.

Incorporate in all professional service agreements, construction contracts and subcontracts that exceed $100,000.

9.2. MANDATORY CONTRACT LANGUAGE.

CONTRACT WORKHOURS AND SAFETY STANDARDS ACT REQUIREMENTS

1. Overtime Requirements.

No contractor or subcontractor contracting for any part of the contract work which may require or involve the employment of laborers or mechanics shall require or permit any such laborer or mechanic, including watchmen and guards, in any workweek in which he or she is employed on such work to work in excess of forty hours in such workweek unless such laborer or mechanic receives compensation at a rate not less than one and one-half times the basic rate of pay for all hours worked in excess of forty hours in such workweek.

1. Violation; Liability for Unpaid Wages; Liquidated Damages.

In the event of any violation of the clause set forth in paragraph (1) above, the contractor and any subcontractor responsible therefor shall be liable for the unpaid wages. In addition, such contractor and subcontractor shall be liable to the United States (in the case of work done under contract for the District of Columbia or a territory, to such District or to such territory), for liquidated damages. Such liquidated damages shall be computed with respect to each individual laborer or mechanic, including watchmen and guards, employed in violation of the clause set forth in paragraph 1 above, in the sum of $10 for each calendar day on which such individual was required or permitted to work in excess of the standard workweek of forty hours without payment of the overtime wages required by the clause set forth in paragraph 1 above.

2. Withholding for Unpaid Wages and Liquidated Damages.

The Federal Aviation Administration or the Sponsor shall upon its own action or upon written request of an authorized representative of the Department of Labor withhold or cause to be withheld, from any monies payable on account of work performed by the contractor or subcontractor under any such contract or any other Federal contract with the same prime contractor, or any other Federally-assisted contract subject to the Contract Work Hours and Safety Standards Act, which is held by the same prime contractor, such sums as may be determined to be necessary to satisfy any liabilities of such contractor or subcontractor for unpaid wages and liquidated damages as provided in the clause set forth in paragraph 2 above.

3. Subcontractors.

The contractor or subcontractor shall insert in any subcontracts the clauses set forth in paragraphs 1 through 4 and also a clause requiring the subcontractor to include these clauses in any lower tier subcontracts. The prime contractor shall be responsible for compliance by any subcontractor or lower tier subcontractor with the clauses set forth in paragraphs 1 through 4 of this section.

10. COPELAND "ANTI-KICKBACK" ACT

(Reference: 2 CFR § 200 Appendix II(D), 29 CFR parts 3 & 5)

10.1. APPLICABILITY.

Incorporate into all construction contracts and subcontracts that exceed $2,000 and are financed under the AIP program.

10.2. MANDATORY CONTRACT LANGUAGE.

The United States Department of Labor Wage and Hours Division oversees the Copeland "Anti-Kickback" Act requirements. All contracts and subcontracts must meet comply with the Occupational Safety and Health Act of 1970.

United States Department of Labor Wage and Hours Division can provide information regarding any specific clauses or assurances pertaining to the Copeland "Anti-Kickback" Act requirements required to be inserted in solicitations, contracts or subcontracts.

11. DAVIS-BACON REQUIREMENTS.

(Reference: 2 CFR § 200 Appendix II(D))

11.1. APPLICABILITY.

Incorporate into all construction contracts and subcontracts that exceed $2,000 and are financed under the AIP program.

11.2. MANDATORY CONTRACT LANGUAGE.

The mandatory language is as follows:

DAVIS-BACON REQUIREMENTS

1. Minimum Wages

(i) All laborers and mechanics employed or working upon the site of the work will be paid unconditionally and not less often than once a week, and without subsequent deduction or rebate on any account (except such payroll deductions as are permitted by the Secretary of Labor under the Copeland Act (29 CFR Part 3)), the full amount of wages and bona fide fringe benefits (or cash equivalent thereof) due at time of payment computed at rates not less than those contained in the wage determination of the Secretary of Labor which is attached hereto and made a part hereof, regardless of any contractual relationship which may be alleged to exist between the contractor and such laborers and mechanics.

Contributions made or costs reasonably anticipated for bona fide fringe benefits under section 1(b)(2) of the Davis-Bacon Act on behalf of laborers or mechanics are considered wages paid to such laborers or mechanics, subject to the provisions of paragraph (1)(iv) of this section; also, regular contributions made or costs incurred for more than a weekly period (but not less often than quarterly) under plans, funds, or programs which cover the particular weekly period, are deemed to be constructively made or incurred during such weekly period. Such laborers and mechanics shall be paid the appropriate wage rate and fringe benefits on the wage determination for the classification of work actually performed, without regard to skill, except as provided in 29 CFR Part 5.5(a)(4). Laborers or mechanics performing work in more than one classification may be compensated at the rate specified for each classification for the time actually worked therein: *Provided*, That the employer's payroll records accurately set forth the time spent in each classification in which work is performed. The wage determination (including any additional classification and wage rates conformed under (1)(ii) of this section) and the Davis-Bacon poster (WH-1321) shall be posted at all times by the contractor and its subcontractors at the site of the work in a prominent and accessible place where it can easily be seen by the workers.

(ii)(A) The contracting officer shall require that any class of laborers or mechanics, including helpers, which is not listed in the wage determination and which is to be employed under the contract shall be classified in conformance with the wage determination. The contracting officer shall approve an

additional classification and wage rate and fringe benefits therefore only when the following criteria have been met:

(1) The work to be performed by the classification requested is not performed by a classification in the wage determination; and

(2) The classification is utilized in the area by the construction industry; and

(3) The proposed wage rate, including any bona fide fringe benefits, bears a reasonable relationship to the wage rates contained in the wage determination.

(B) If the contractor and the laborers and mechanics to be employed in the classification (if known), or their representatives, and the contracting officer agree on the classification and wage rate (including the amount designated for fringe benefits where appropriate), a report of the action taken shall be sent by the contracting officer to the Administrator of the Wage and Hour Division, Employment Standards Administration, U.S. Department of Labor, Washington, D.C. 20210. The Administrator, or an authorized representative, will approve, modify, or disapprove every additional classification action within 30 days of receipt and so advise the contracting officer or will notify the contracting officer within the 30-day period that additional time is necessary.

(C) In the event the contractor, the laborers or mechanics to be employed in the classification or their representatives, and the contracting officer do not agree on the proposed classification and wage rate (including the amount designated for fringe benefits where appropriate), the contracting officer shall refer the questions, including the views of all interested parties and the recommendation of the contracting officer, to the Administrator for determination. The Administrator, or an authorized representative, will issue a determination within 30 days of receipt and so advise the contracting officer or will notify the contracting officer within the 30-day period that additional time is necessary.

(D) The wage rate (including fringe benefits where appropriate) determined pursuant to subparagraphs (1)(ii) (B) or (C) of this paragraph, shall be paid to all workers performing work in the classification under this contract from the first day on which work is performed in the classification.

(iii) Whenever the minimum wage rate prescribed in the contract for a class of laborers or mechanics includes a fringe benefit which is not expressed as an hourly rate, the contractor shall either pay the benefit as stated in the wage determination or shall pay another bona fide fringe benefit or an hourly cash equivalent thereof.

(iv) If the contractor does not make payments to a trustee or other third person, the contractor may consider as part of the wages of any laborer or mechanic the amount of any costs reasonably anticipated in providing bona fide fringe benefits under a plan or program, *Provided*, That the Secretary of Labor has found, upon the written request of the contractor, that the applicable standards of the Davis-Bacon Act have been met. The Secretary of Labor may require the contractor to set aside in a separate account assets for the meeting of obligations under the plan or program.

2 Withholding.

The Federal Aviation Administration or the Sponsor shall upon its own action or upon written request of an authorized representative of the Department of Labor withhold or cause to be withheld from the contractor under this contract or any other Federal contract with the same prime contractor, or any other Federally-assisted contract subject to Davis-Bacon prevailing wage requirements, which is held by the same prime contractor, so much of the accrued payments or advances as may be considered necessary to pay laborers and mechanics, including apprentices, trainees, and helpers, employed by the contractor or any subcontractor the full amount of wages required by the contract. In the event of failure to pay any laborer or mechanic, including any apprentice, trainee, or helper, employed or working on the site of work, all or part of the wages required by the contract, the Federal Aviation Administration may, after written notice to the contractor, sponsor, applicant, or owner, take such action as may be necessary to cause the suspension of any further payment, advance, or guarantee of funds until such violations have ceased.

3. Payrolls and basic records.

(i) Payrolls and basic records relating thereto shall be maintained by the contractor during the course of the work and preserved for a period of three years thereafter for all laborers and mechanics working at the site of the work. Such records shall contain the name, address, and social security number of each such worker, his or her correct classification, hourly rates of wages paid (including rates of contributions or costs anticipated for bona fide fringe benefits or cash equivalents thereof of the types described in 1(b)(2)(B) of the Davis-Bacon Act), daily and weekly number of hours worked, deductions made and actual wages paid. Whenever the Secretary of Labor has found under 29 CFR 5.5(a)(1)(iv) that the wages of any laborer or mechanic include the amount of any costs reasonably anticipated in providing benefits under a plan or program described in section 1(b)(2)(B) of the Davis-Bacon Act, the contractor shall maintain records which show that the commitment to provide such benefits is enforceable, that the plan or program is financially responsible, and that the plan or program has been communicated in writing to the laborers or mechanics affected, and records which show the costs anticipated or the actual costs incurred in providing such benefits. Contractors employing apprentices or trainees under approved programs shall maintain written evidence of the registration of apprenticeship programs and certification of trainee programs, the registration of the apprentices and trainees, and the ratios and wage rates prescribed in the applicable programs.

(ii)(A) The contractor shall submit weekly for each week in which any contract work is performed a copy of all payrolls to the Federal Aviation Administration if the agency is a party to the contract, but if the agency is not such a party, the contractor will submit the payrolls to the applicant, sponsor, or owner, as the case may be, for transmission to the Federal Aviation Administration. The payrolls submitted shall set out accurately and completely all of the information required to be maintained under 29 CFR 5.5(a)(3)(i), except that full social security numbers and home addresses shall not be included on weekly transmittals. Instead the payrolls shall only need to include an individually identifying number for each employee (*e.g.* , the last four digits of the employee's social security number). The required weekly

payroll information may be submitted in any form desired. Optional Form WH–347 is available for this purpose from the Wage and Hour Division Web site at *http://www.dol.gov/esa/whd/forms/wh347instr.htm* or its successor site. The prime contractor is responsible for the submission of copies of payrolls by all subcontractors. Contractors and subcontractors shall maintain the full social security number and current address of each covered worker, and shall provide them upon request to the Federal Aviation Administration if the agency is a party to the contract, but if the agency is not such a party, the contractor will submit them to the applicant, sponsor, or owner, as the case may be, for transmission to the Federal Aviation Administration, the contractor, or the Wage and Hour Division of the Department of Labor for purposes of an investigation or audit of compliance with prevailing wage requirements. It is not a violation of this section for a prime contractor to require a subcontractor to provide addresses and social security numbers to the prime contractor for its own records, without weekly submission to the sponsoring government agency (or the applicant, sponsor, or owner).

(B) Each payroll submitted shall be accompanied by a "Statement of Compliance," signed by the contractor or subcontractor or his or her agent who pays or supervises the payment of the persons employed under the contract and shall certify the following:

(1) That the payroll for the payroll period contains the information required to be provided under 29 CFR § 5.5(a)(3)(ii), the appropriate information is being maintained under 29 CFR § 5.5 (a)(3)(i) and that such information is correct and complete;

(2) That each laborer and mechanic (including each helper, apprentice and trainee) employed on the contract during the payroll period has been paid the full weekly wages earned, without rebate, either directly or indirectly, and that no deductions have been made either directly or indirectly from the full wages earned, other than permissible deductions as set forth in Regulations 29 CFR Part 3;

(3) That each laborer or mechanic has been paid not less than the applicable wage rates and fringe benefits or cash equivalents for the classification of work performed, as specified in the applicable wage determination incorporated into the contract.

(C) The weekly submission of a properly executed certification set forth on the reverse side of Optional Form WH-347 shall satisfy the requirement for submission of the "Statement of Compliance" required by paragraph (3)(ii)(B) of this section.

(D) The falsification of any of the above certifications may subject the contractor or subcontractor to civil or criminal prosecution under Section 1001 of Title 18 and Section 231 of Title 31 of the United States Code.

(iii) The contractor or subcontractor shall make the records required under paragraph (3)(i) of this section available for inspection, copying or transcription by authorized representatives of the Sponsor, the Federal Aviation Administration or the Department of Labor, and shall permit such representatives to interview employees during working hours on the job. If the contractor or subcontractor fails to

submit the required records or to make them available, the Federal agency may, after written notice to the contractor, sponsor, applicant or owner, take such action as may be necessary to cause the suspension of any further payment, advance, or guarantee of funds. Furthermore, failure to submit the required records upon request or to make such records available may be grounds for debarment action pursuant to 29 CFR 5.12.

4. Apprentices and Trainees.

(i) Apprentices. Apprentices will be permitted to work at less than the predetermined rate for the work they performed when they are employed pursuant to and individually registered in a bona fide apprenticeship program registered with the U.S. Department of Labor, Employment and Training Administration, Bureau of Apprenticeship and Training, or with a State Apprenticeship Agency recognized by the Bureau, or if a person is employed in his or her first 90 days of probationary employment as an apprentice in such an apprenticeship program, who is not individually registered in the program, but who has been certified by the Bureau of Apprenticeship and Training or a State Apprenticeship Agency (where appropriate) to be eligible for probationary employment as an apprentice. The allowable ratio of apprentices to journeymen on the job site in any craft classification shall not be greater than the ratio permitted to the contractor as to the entire work force under the registered program. Any worker listed on a payroll at an apprentice wage rate, who is not registered or otherwise employed as stated above, shall be paid not less than the applicable wage rate on the wage determination for the classification of work actually performed. In addition, any apprentice performing work on the job site in excess of the ratio permitted under the registered program shall be paid not less than the applicable wage rate on the wage determination for the work actually performed. Where a contractor is performing construction on a project in a locality other than that in which its program is registered, the ratios and wage rates (expressed in percentages of the journeyman's hourly rate) specified in the contractor's or subcontractor's registered program shall be observed. Every apprentice must be paid at not less than the rate specified in the registered program for the apprentice's level of progress, expressed as a percentage of the journeymen hourly rate specified in the applicable wage determination. Apprentices shall be paid fringe benefits in accordance with the provisions of the apprenticeship program. If the apprenticeship program does not specify fringe benefits, apprentices must be paid the full amount of fringe benefits listed on the wage determination for the applicable classification. If the Administrator determines that a different practice prevails for the applicable apprentice classification, fringes shall be paid in accordance with that determination. In the event the Bureau of Apprenticeship and Training, or a State Apprenticeship Agency recognized by the Bureau, withdraws approval of an apprenticeship program, the contractor will no longer be permitted to utilize apprentices at less than the applicable predetermined rate for the work performed until an acceptable program is approved.

(ii) Trainees. Except as provided in 29 CFR 5.16, trainees will not be permitted to work at less than the predetermined rate for the work performed unless they are employed pursuant to and individually registered in a program which has received prior approval, evidenced by formal certification by the U.S. Department of Labor, Employment and Training Administration. The ratio of trainees to journeymen on

the job site shall not be greater than permitted under the plan approved by the Employment and Training Administration. Every trainee must be paid at not less than the rate specified in the approved program for the trainee's level of progress, expressed as a percentage of the journeyman hourly rate specified in the applicable wage determination. Trainees shall be paid fringe benefits in accordance with the provisions of the trainee program. If the trainee program does not mention fringe benefits, trainees shall be paid the full amount of fringe benefits listed on the wage determination unless the Administrator of the Wage and Hour Division determines that there is an apprenticeship program associated with the corresponding journeyman wage rate on the wage determination which provides for less than full fringe benefits for apprentices. Any employee listed on the payroll at a trainee rate that is not registered and participating in a training plan approved by the Employment and Training Administration shall be paid not less than the applicable wage rate on the wage determination for the classification of work actually performed. In addition, any trainee performing work on the job site in excess of the ratio permitted under the registered program shall be paid not less than the applicable wage rate on the wage determination for the work actually performed. In the event the Employment and Training Administration withdraws approval of a training program, the contractor will no longer be permitted to utilize trainees at less than the applicable predetermined rate for the work performed until an acceptable program is approved.

(iii) Equal Employment Opportunity. The utilization of apprentices, trainees and journeymen under this part shall be in conformity with the equal employment opportunity requirements of Executive Order 11246, as amended, and 29 CFR Part 30.

5. Compliance With Copeland Act Requirements.

The contractor shall comply with the requirements of 29 CFR Part 3, which are incorporated by reference in this contract.

6. Subcontracts.

The contractor or subcontractor shall insert in any subcontracts the clauses contained in 29 CFR Part 5.5(a)(1) through (10) and such other clauses as the Federal Aviation Administration may by appropriate instructions require, and also a clause requiring the subcontractors to include these clauses in any lower tier subcontracts. The prime contractor shall be responsible for the compliance by any subcontractor or lower tier subcontractor with all the contract clauses in 29 CFR Part 5.5.

7. Contract Termination: Debarment.

A breach of the contract clauses in paragraph 1 through 10 of this section may be grounds for termination of the contract, and for debarment as a contractor and a subcontractor as provided in 29 CFR 5.12.

8. Compliance With Davis-Bacon and Related Act Requirements.

All rulings and interpretations of the Davis-Bacon and Related Acts contained in 29 CFR Parts 1, 3, and 5 are herein incorporated by reference in this contract.

9. Disputes Concerning Labor Standards.

Disputes arising out of the labor standards provisions of this contract shall not be subject to the general disputes clause of this contract. Such disputes shall be resolved in accordance with the procedures of the Department of Labor set forth in 29 CFR Parts 5, 6 and 7. Disputes within the meaning of this clause include disputes between the contractor (or any of its subcontractors) and the contracting agency, the U.S. Department of Labor, or the employees or their representatives.

10. Certification of Eligibility.

(i) By entering into this contract, the contractor certifies that neither it (nor he or she) nor any person or firm who has an interest in the contractor's firm is a person or firm ineligible to be awarded Government contracts by virtue of section 3(a) of the Davis-Bacon Act or 29 CFR 5.12(a)(1).

(ii) No part of this contract shall be subcontracted to any person or firm ineligible for award of a Government contract by virtue of section 3(a) of the Davis-Bacon Act or 29 CFR 5.12(a)(1).

(iii) The penalty for making false statements is prescribed in the U.S. Criminal Code, 18 U.S.C. 1001.

12. DEBARMENT AND SUSPENSION (NON-PROCUREMENT).

(Reference: 2 CFR part 180 (Subpart C), 2 CFR part 1200, DOT Order 4200.5 DOT Suspension & Debarment Procedures & Ineligibility)

12.1. APPLICABILITY.

The contract agreement that ultimately results from this solicitation is a "covered transaction" as defined by Title 2 CFR Part 180. Bidder must certify at the time they submit their proposal that neither it nor its principals are presently debarred or suspended by any Federal department or agency from participation in this transaction. The bidder with the successful bid further agrees to comply with Title 2 CFR Part 1200 and Title 2 CFR Part 180, Subpart C by administering each lower tier subcontract that exceeds $25,000 as a "covered transaction".

Incorporate in all contracts and subcontracts that exceed $25,000.

12.2. MANDATORY CONTRACT LANGUAGE.

CERTIFICATE REGARDING DEBARMENT AND SUSPENSION (BIDDER OR OFFEROR)

By submitting a bid/proposal under this solicitation, the bidder or offeror certifies that at the time the bidder or offeror submits its proposal that neither it nor its principals are presently debarred or suspended by any Federal department or agency from participation in this transaction.

CERTIFICATION REGARDING DEBARMENT AND SUSPENSION (SUCCESSFUL BIDDER REGARDING LOWER TIER PARTICIPANTS)

The successful bidder, by administering each lower tier subcontract that exceeds $25,000 as a "covered transaction", must verify each lower tier participant of a "covered transaction" under the project is not presently debarred or otherwise disqualified from participation in this federally assisted project. The successful bidder will accomplish this by:

1. Checking the System for Award Management at website: http://www.sam.gov
2. Collecting a certification statement similar to the Certificate Regarding Debarment and Suspension (Bidder or Offeror), above.
3. Inserting a clause or condition in the covered transaction with the lower tier contract

If the FAA later determines that a lower tier participant failed to tell a higher tier that it was excluded or disqualified at the time it entered the covered transaction, the FAA may pursue any available remedy, including suspension and debarment.

13. DISADVANTAGED BUSINESS ENTERPRISE.

(Reference: 49 CFR part 26)

13.1. APPLICABILITY.

The Disadvantaged Business Enterprise requirements found in 49 CFR part 26, apply to all AIP-funded projects and must be included in all contracts and subcontracts. This includes both project with contract goals and project relying on race/gender neutral means.

13.2. MANDATORY CONTRACT LANGUAGE.

DISADVANTAGED BUSINESS ENTERPRISES

Contract Assurance (§ 26.13) - The contractor or subcontractor shall not discriminate on the basis of race, color, national origin, or sex in the performance of this contract. The contractor shall carry out applicable requirements of 49 CFR Part 26 in the award and administration of DOT assisted contracts. Failure by the contractor to carry out these requirements is a material breach of this contract, which may result in the termination of this contract or such other remedy, as the recipient deems appropriate.

Prompt Payment (§26.29)- The prime contractor agrees to pay each subcontractor under this prime contract for satisfactory performance of its contract no later than **14** days from the receipt of each payment the prime contractor receives from **CITY**. The prime contractor agrees further to return retainage payments to each subcontractor within **14** days after the subcontractor's work is satisfactorily completed. Any delay or postponement of payment from the above referenced time frame may occur only for good cause following written approval of the **CITY**. This clause applies to both DBE and non-DBE subcontractors.

14. ENERGY CONSERVATION REQUIREMENTS.

(Reference 2 CFR § 200 Appendix II(H))

14.1. APPLICABILITY.

The Energy Conservation Requirements found in 2 CFR § 200 Appendix II(H), apply to all AIP-funded construction and equipment projects and must be included in all contracts and subcontracts.

14.2. MANDATORY CONTRACT LANGUAGE.

The regulation does not prescribe mandatory language, however the following clause represents sample language that meets the intent of 2 CFR § 200 Appendix II(H):

ENERGY CONSERVATION REQUIREMENTS

The contractor agrees to comply with mandatory standards and policies relating to energy efficiency that are contained in the state energy conservation plan issued in compliance with the Energy Policy and Conservation Act (Public Law 94-163).

15. EQUAL OPPORTUNITY CLAUSE AND SPECIFICATIONS.

(Reference 41 CFR § 60-1.4, Executive Order 11246)

15.1. APPLICABILITY.

Incorporate contract language and specifications into all construction contracts and subcontracts that exceed $10,000 and are financed under the AIP program.

15.2. MANDATORY CONTRACT LANGUAGE.

EQUAL OPPORTUNITY CLAUSE

During the performance of this contract, the contractor agrees as follows:

(1) The contractor will not discriminate against any employee or applicant for employment because of race, color, religion, sex, or national origin. The contractor will take affirmative action to ensure that applicants are employed, and that employees are treated during employment without regard to their race, color, religion, sex, or national origin. such action shall include, but not be limited to the following: Employment, upgrading, demotion, or transfer; recruitment or recruitment advertising; layoff or termination; rates of pay or other forms of compensation; and selection for training, including apprenticeship. The contractor agrees to post in conspicuous places, available to employees and applicants for employment, notices to be provided setting forth the provisions of this nondiscrimination clause.

(2) The contractor will, in all solicitations or advertisements for employees placed by or on behalf of the contractor, state that all qualified applicants will receive considerations for employment without regard to race, color, religion, sex, or national origin.

(3) The contractor will send to each labor union or representative of workers with which he has a collective bargaining agreement or other contract or understanding, a notice to be provided advising the said labor union or workers' representatives of the contractor's commitments under this section, and shall post copies of the notice in conspicuous places available to employees and applicants for employment.

(4) The contractor will comply with all provisions of Executive Order 11246 of September 24, 1965, and of the rules, regulations, and relevant orders of the Secretary of Labor.

(5) The contractor will furnish all information and reports required by Executive Order 11246 of September 24, 1965, and by rules, regulations, and orders of the Secretary of Labor, or pursuant thereto, and will permit access to his books, records, and accounts by the administering agency and the Secretary of Labor for purposes of investigation to ascertain compliance with such rules, regulations, and orders.

(6) In the event of the contractor's noncompliance with the nondiscrimination clauses of this contract or with any of the said rules, regulations, or orders, this contract may be canceled, terminated, or suspended in whole or in part and the contractor may be declared ineligible for further Government contracts or federally assisted construction contracts in accordance with procedures authorized in Executive Order 11246 of September 24, 1965, and such other sanctions may be imposed and remedies invoked as provided in Executive Order 11246 of September 24, 1965, or by rule, regulation, or order of the Secretary of Labor, or as otherwise provided by law.

(7) The contractor will include the portion of the sentence immediately preceding paragraph (1) and the provisions of paragraphs (1) through (7) in every subcontract or purchase order unless exempted by rules, regulations, or orders of the Secretary of Labor issued pursuant to section 204 of Executive Order 11246 of September 24, 1965, so that such provisions will be binding upon each subcontractor or vendor. The contractor will take such action with respect to any subcontract or purchase order as the administering agency may direct as a means of enforcing such provisions, including sanctions for noncompliance: Provided, however, That in the event a contractor becomes involved in, or is threatened with, litigation with a subcontractor or vendor as a result of such direction by the administering agency the contractor may request the United States to enter into such litigation to protect the interests of the United States.

STANDARD FEDERAL EQUAL EMPLOYMENT OPPORTUNITY CONSTRUCTION CONTRACT SPECIFICATIONS

1. As used in these specifications:

a. "Covered area" means the geographical area described in the solicitation from which this contract resulted;

b. "Director" means Director, Office of Federal Contract Compliance Programs (OFCCP), U.S. Department of Labor, or any person to whom the Director delegates authority;

c. "Employer identification number" means the Federal social security number used on the Employer's Quarterly Federal Tax Return, U.S. Treasury Department Form 941;

d. "Minority" includes:

(1) Black (all) persons having origins in any of the Black African racial groups not of Hispanic origin);

(2) Hispanic (all persons of Mexican, Puerto Rican, Cuban, Central or South American, or other Spanish culture or origin regardless of race);

(3) Asian and Pacific Islander (all persons having origins in any of the original peoples of the Far East, Southeast Asia, the Indian Subcontinent, or the Pacific Islands); and

(4) American Indian or Alaskan native (all persons having origins in any of the original peoples of North America and maintaining identifiable tribal affiliations through membership and participation or community identification).

2. Whenever the contractor, or any subcontractor at any tier, subcontracts a portion of the work involving any construction trade, it shall physically include in each subcontract in excess of $10,000 the provisions of these specifications and the Notice which contains the applicable goals for minority and female participation and which is set forth in the solicitations from which this contract resulted.

3. If the contractor is participating (pursuant to 41 CFR 60-4.5) in a Hometown Plan approved by the U.S. Department of Labor in the covered area either individually or through an association, its affirmative action obligations on all work in the Plan area (including goals and timetables) shall be in accordance with that Plan for those trades which have unions participating in the Plan. Contractors shall be able to demonstrate their participation in and compliance with the provisions of any such Hometown Plan. Each contractor or subcontractor participating in an approved plan is individually required to comply with its obligations under the EEO clause and to make a good faith effort to achieve each goal under the Plan in each trade in which it has employees. The overall good faith performance by other contractors or subcontractors toward a goal in an approved Plan does not excuse any covered contractor's or subcontractor's failure to take good faith efforts to achieve the Plan goals and timetables.

4. The contractor shall implement the specific affirmative action standards provided in paragraphs 18.7a through 18.7p of these specifications. The goals set forth in the solicitation from which this contract resulted are expressed as percentages of the total hours of employment and training of minority and female utilization the contractor should reasonably be able to achieve in each construction trade in which it has employees in the covered area. Covered construction contractors performing construction work in a geographical area where they do not have a Federal or federally assisted construction contract shall apply the minority and female goals established for the geographical area where the work is being performed. Goals are published periodically in the Federal Register in notice form, and such notices may be obtained from any Office of Federal Contract Compliance Programs office or from Federal procurement contracting officers. The contractor is expected to make substantially uniform progress in meeting its goals in each craft during the period specified.

5. Neither the provisions of any collective bargaining agreement nor the failure by a union with whom the contractor has a collective bargaining agreement to refer either minorities or women shall excuse the contractor's obligations under these specifications, Executive Order 11246 or the regulations promulgated pursuant thereto.

6. In order for the non-working training hours of apprentices and trainees to be counted in meeting the goals, such apprentices and trainees shall be employed by the contractor during the training period and the contractor shall have made a commitment to employ the apprentices and trainees at the completion of their training, subject to the availability of employment opportunities. Trainees shall be trained pursuant to training programs approved by the U.S. Department of Labor.

7. The contractor shall take specific affirmative actions to ensure equal employment opportunity. The evaluation of the contractor's compliance with these specifications shall be based upon its effort to achieve maximum results from its actions. The contractor shall document these efforts fully and shall implement affirmative action steps at least as extensive as the following:

a. Ensure and maintain a working environment free of harassment, intimidation, and coercion at all sites, and in all facilities at which the contractor's employees are assigned to work. The contractor, where possible, will assign two or more women to each construction project. The contractor shall specifically ensure that all foremen, superintendents, and other onsite supervisory personnel are aware of and carry out the contractor's obligation to maintain such a working environment, with specific attention to minority or female individuals working at such sites or in such facilities.

b. Establish and maintain a current list of minority and female recruitment sources, provide written notification to minority and female recruitment sources and to community organizations when the contractor or its unions have employment opportunities available, and maintain a record of the organizations' responses.

c. Maintain a current file of the names, addresses, and telephone numbers of each minority and female off-the-street applicant and minority or female referral from a union, a recruitment source, or community organization and of what action was taken with respect to each such individual. If such individual was sent to the union hiring hall for referral and was not referred back to the contractor by the union or, if referred, not employed by the contractor, this shall be documented in the file with the reason therefore along with whatever additional actions the contractor may have taken.

d. Provide immediate written notification to the Director when the union or unions with which the contractor has a collective bargaining agreement has not referred to the contractor a minority person or female sent by the contractor, or when the contractor has other information that the union referral process has impeded the contractor's efforts to meet its obligations.

e. Develop on-the-job training opportunities and/or participate in training programs for the area which expressly include minorities and women, including upgrading programs and apprenticeship and trainee programs relevant to the contractor's employment needs, especially those programs funded or approved by the Department of Labor. The contractor shall provide notice of these programs to the sources compiled under 7b above.

f. Disseminate the contractor's EEO policy by providing notice of the policy to unions and training programs and requesting their cooperation in assisting the contractor in meeting its EEO obligations; by including it in any policy manual and collective bargaining agreement; by publicizing it in the company newspaper, annual report, etc.; by specific review of the policy with all management personnel and with all minority and female employees at least once a year; and by posting the company EEO policy on bulletin boards accessible to all employees at each location where construction work is performed.

g. Review, at least annually, the company's EEO policy and affirmative action obligations under these specifications with all employees having any responsibility for hiring, assignment, layoff, termination, or other employment decisions including specific review of these items with onsite supervisory personnel such a superintendents, general foremen, etc., prior to the initiation of construction work at any job site. A written record shall be made and maintained identifying the time and place of these meetings, persons attending, subject matter discussed, and disposition of the subject matter.

h. Disseminate the contractor's EEO policy externally by including it in any advertising in the news media, specifically including minority and female news media, and providing written notification to and discussing the contractor's EEO policy with other contractors and subcontractors with whom the contractor does or anticipates doing business.

i. Direct its recruitment efforts, both oral and written, to minority, female, and community organizations, to schools with minority and female students; and to minority and female recruitment and training organizations serving the contractor's recruitment area and employment needs. Not later than one month prior to the date for the acceptance of applications for apprenticeship or other training by any recruitment source, the contractor shall send written notification to organizations, such as the above, describing the openings, screening procedures, and tests to be used in the selection process.

j. Encourage present minority and female employees to recruit other minority persons and women and, where reasonable provide after school, summer, and vacation employment to minority and female youth both on the site and in other areas of a contractor's workforce.

k. Validate all tests and other selection requirements where there is an obligation to do so under 41 CFR Part 60-3.

l. Conduct, at least annually, an inventory and evaluation at least of all minority and female personnel, for promotional opportunities and encourage these employees to seek or to prepare for, through appropriate training, etc., such opportunities.

m. Ensure that seniority practices, job classifications, work assignments, and other personnel practices do not have a discriminatory effect by continually monitoring all personnel and employment related activities to ensure that the EEO policy and the contractor's obligations under these specifications are being carried out.

n. Ensure that all facilities and company activities are non-segregated except that separate or single user toilet and necessary changing facilities shall be provided to assure privacy between the sexes.

o. Document and maintain a record of all solicitations of offers for subcontracts from minority and female construction contractors and suppliers, including circulation of solicitations to minority and female contractor associations and other business associations.

p. Conduct a review, at least annually, of all supervisor's adherence to and performance under the contractor's EEO policies and affirmative action obligations.

8. Contractors are encouraged to participate in voluntary associations, which assist in fulfilling one or more of their affirmative action obligations (18.7a through 18.7p). The efforts of a contractor association, joint contractor union, contractor community, or other similar groups of which the contractor is a member and participant, may be asserted as fulfilling any one or more of its obligations under 18.7a through 18.7p of these specifications provided that the contractor actively participates in the group, makes every effort to assure that the group has a positive impact on the employment of minorities and women in the industry, ensures that the concrete benefits of the program are reflected in the contractor's minority and female workforce participation, makes a good faith effort to meet its individual goals and timetables, and can provide access to documentation which demonstrates the effectiveness of actions taken on behalf of the contractor. The obligation to comply, however, is the contractor's and failure of such a group to fulfill an obligation shall not be a defense for the contractor's noncompliance.

9. A single goal for minorities and a separate single goal for women have been established. The contractor, however, is required to provide equal employment opportunity and to take affirmative action for all minority groups, both male and female, and all women, both minority and non-minority. Consequently, if the particular group is employed in a substantially disparate manner (for example, even though the contractor has achieved its goals for women generally,) the contractor may be in violation of the Executive Order if a specific minority group of women is underutilized.

10. The contractor shall not use the goals and timetables or affirmative action standards to discriminate against any person because of race, color, religion, sex, or national origin.

11. The contractor shall not enter into any subcontract with any person or firm debarred from Government contracts pursuant to Executive Order 11246.

12. The contractor shall carry out such sanctions and penalties for violation of these specifications and of the Equal Opportunity Clause, including suspension, termination, and cancellation of existing subcontracts as may be imposed or ordered pursuant to Executive Order 11246, as amended, and its implementing regulations, by the Office of Federal Contract Compliance Programs. Any contractor who fails to carry out such sanctions and penalties shall be in violation of these specifications and Executive Order 11246, as amended.

13. The contractor, in fulfilling its obligations under these specifications, shall implement specific affirmative action steps, at least as extensive as those standards prescribed in paragraph 18.7 of these specifications, so as to achieve maximum results from its efforts to ensure equal employment opportunity. If the contractor fails to comply with the requirements of the Executive Order, the implementing regulations, or these specifications, the Director shall proceed in accordance with 41 CFR 60-4.8.

14. The contractor shall designate a responsible official to monitor all employment related activity to ensure that the company EEO policy is being carried out, to submit reports relating to the provisions hereof as may be required by the Government, and to keep records. Records shall at least include for each employee, the name, address, telephone number, construction trade, union affiliation if any, employee identification number when assigned, social security number, race, sex, status (e.g., mechanic, apprentice, trainee, helper, or laborer), dates of changes in status, hours worked per week in the indicated trade, rate of pay, and locations at which the work was performed. Records shall be maintained in an easily understandable and retrievable form; however, to the degree that existing records satisfy this requirement, contractors shall not be required to maintain separate records.

15. Nothing herein provided shall be construed as a limitation upon the application of other laws which establish different standards of compliance or upon the application of requirements for the hiring of local or other area residents (e.g., those under the Public Works Employment Act of 1977 and the Community Development Block Grant Program).

16. FEDERAL FAIR LABOR STANDARDS ACT (FEDERAL MINIMUM WAGE)

(Reference: 29 USC § 201, et seq.)

16.1. APPLICABILITY.

The federal minimum wage provisions are contained in the Fair Labor Standards Act (FLSA) which is administered by the United States Department of Labor Wage and Hour Division. All contracts and subcontracts must meet comply with the FLSA, including the recordkeeping standards of the Act.

16.2. MANDATORY CONTRACT LANGUAGE.

All contracts and subcontracts that result from this solicitation incorporate the following provisions by reference, with the same force and effect as if given in full text. The contractor has full responsibility to monitor compliance to the referenced statute or regulation. The contractor must address any claims or disputes that pertain to a referenced requirement directly with the Federal Agency with enforcement responsibilities.

Requirement	Federal Agency with Enforcement Responsibilities
Federal Fair Labor Standards Act (29 USC 201)	U.S. Department of Labor – Wage and Hour Division

17. LOBBYING AND INFLUENCING FEDERAL EMPLOYEES. (Reference: 49 CFR part 20, Appendix A)

17.1. APPLICABILITY.

The Lobbying and Influencing Federal Employees prohibition found in 49 CFR part 20, Appendix A, applies to all AIP-funded projects and must be included in all contracts and subcontracts.

17.2. MANDATORY CONTRACT LANGUAGE.

The mandatory language that must be used on AIP funded project contracts is as follows:

LOBBYING AND INFLUENCING FEDERAL EMPLOYEES

The bidder or offeror certifies by signing and submitting this bid or proposal, to the best of his or her knowledge and belief, that:

1) No Federal appropriated funds have been paid or will be paid, by or on behalf of the bidder or offeror, to any person for influencing or attempting to influence an officer or employee of an agency, a Member of Congress, an officer or employee of Congress, or an employee of a Member of Congress in connection with the awarding of any Federal contract, the making of any Federal grant, the making of any Federal loan, the entering into of any cooperative agreement, and the extension, continuation, renewal, amendment, or modification of any Federal contract, grant, loan, or cooperative agreement.

2) If any funds other than Federal appropriated funds have been paid or will be paid to any person for influencing or attempting to influence an officer or employee of any agency, a Member of Congress, an officer or employee of Congress, or an employee of a Member of Congress in connection with this Federal contract, grant, loan, or cooperative agreement, the undersigned shall complete and submit Standard Form-LLL, "Disclosure Form to Report Lobbying," in accordance with its instructions.

This certification is a material representation of fact upon which reliance was placed when this transaction was made or entered into. Submission of this certification is a prerequisite for making or entering into this transaction imposed by section 1352, title 31, U.S. Code. Any person who fails to file the required certification shall be subject to a civil penalty of not less than $10,000 and not more than $100,000 for each such failure.

18. NONSEGREGATED FACILITIES REQUIREMENT.

(Reference: 41 CFR § 60-1.8)

18.1. APPLICABILITY.

Incorporate in all construction contracts and subcontracts that exceed $10,000. The notices must be placed within the solicitation for proposals. The actual certification must be incorporated in the contract agreement.

18.2. MANDATORY CONTRACT LANGUAGE AND NOTICE.

NOTICE OF NONSEGREGATED FACILITIES REQUIREMENT

Notice to Prospective Federally Assisted Construction Contractors

1. A Certification of Non-segregated Facilities shall be submitted prior to the award of a federally-assisted construction contract exceeding $10,000 which is not exempt from the provisions of the Equal Opportunity Clause.

2. Contractors receiving federally-assisted construction contract awards exceeding $10,000 which are not exempt from the provisions of the Equal Opportunity Clause will be required to provide for the forwarding of the following notice to prospective subcontractors for supplies and construction contracts where the subcontracts exceed $10,000 and are not exempt from the provisions of the Equal Opportunity Clause.

3. The penalty for making false statements in offers is prescribed in 18 U.S.C. § 1001.

Notice to Prospective Subcontractors of Requirements for Certification of Non-Segregated Facilities

1. A Certification of Non-segregated Facilities shall be submitted prior to the award of a subcontract exceeding $10,000, which is not exempt from the provisions of the Equal Opportunity Clause.

2. Contractors receiving subcontract awards exceeding $10,000 which are not exempt from the provisions of the Equal Opportunity Clause will be required to provide for the forwarding of this notice to prospective subcontractors for supplies and construction contracts where the subcontracts exceed $10,000 and are not exempt from the provisions of the Equal Opportunity Clause.

3. The penalty for making false statements in offers is prescribed in 18 U.S.C. § 1001.

CERTIFICATION OF NONSEGREGATED FACILITIES

The federally-assisted construction contractor certifies that she or he does not maintain or provide, for his employees, any segregated facilities at any of his establishments and that she or he does not permit his employees to perform their services at any location, under his control, where segregated facilities

are maintained. The federally-assisted construction contractor certifies that she or he will not maintain or provide, for his employees, segregated facilities at any of his establishments and that she or he will not permit his employees to perform their services at any location under his control where segregated facilities are maintained. The federally-assisted construction contractor agrees that a breach of this certification is a violation of the Equal Opportunity Clause in this contract.

As used in this certification, the term "segregated facilities" means any waiting rooms, work areas, restrooms, and washrooms, restaurants and other eating areas, time clocks, locker rooms and other storage or dressing areas, parking lots, drinking fountains, recreation or entertainment areas, transportation, and housing facilities provided for employees which are segregated by explicit directives or are, in fact, segregated on the basis of race, color, religion, or national origin because of habit, local custom, or any other reason. The federally-assisted construction contractor agrees that (except where she or he has obtained identical certifications from proposed subcontractors for specific time periods) she or he will obtain identical certifications from proposed subcontractors prior to the award of subcontracts exceeding $10,000 which are not exempt from the provisions of the Equal Opportunity Clause and that she or he will retain such certifications in his files.

19. OCCUPATIONAL SAFETY AND HEALTH ACT OF 1970

(Reference 20 CFR part 1910)

19.1. APPLICABILITY.

The United States Department of Labor Occupational Safety & Health Administration (OSHA) oversees the workplace health and safety standards wage provisions from the Occupational Safety and Health Act of 1970. All contracts and subcontracts must meet comply with the Occupational Safety and Health Act of 1970.

19.2. MANDATORY CONTRACT LANGUAGE.

All contracts and subcontracts that result from this solicitation incorporate the following provisions by reference, with the same force and effect as if given in full text. The contractor has full responsibility to monitor compliance to the referenced statute or regulation. The contractor must address any claims or disputes that pertain to a referenced requirement directly with the Federal Agency with enforcement responsibilities.

Requirement	Federal Agency with Enforcement Responsibilities
Occupational Safety and Health Act of 1970 (20 CFR Part 1910)	U.S. Department of Labor – Occupational Safety and Health Administration

20. RIGHT TO INVENTIONS.

(Reference 2 CFR § 200 Appendix II(F))

20.1. APPLICABILITY.

The requirement for rights to inventions and materials found in 2 CFR § 200 Appendix II(F) applies to all AIP-funded projects and must be included in all contracts and subcontracts.

20.2. MANDATORY CONTRACT LANGUAGE.

The regulation does not prescribe mandatory language, however the following clause represents sample language that meets the intent of 2 CFR § 200 Appendix II(F).

RIGHTS TO INVENTIONS

All rights to inventions and materials generated under this contract are subject to requirements and regulations issued by the FAA and the Sponsor of the Federal grant under which this contract is executed.

21. TERMINATION OF CONTRACT.

(Reference 2 CFR § 200 Appendix II(B))

21.1. APPLICABILITY.

Incorporate in all contracts and subcontracts that exceed $10,000.

21.2. MANDATORY CONTRACT LANGUAGE.

TERMINATION OF CONTRACT

a. The Sponsor may, by written notice, terminate this contract in whole or in part at any time, either for the Sponsor's convenience or because of failure to fulfill the contract obligations. Upon receipt of such notice services must be immediately discontinued (unless the notice directs otherwise) and all materials as may have been accumulated in performing this contract, whether completed or in progress, delivered to the Sponsor.

b. If the termination is for the convenience of the Sponsor, an equitable adjustment in the contract price will be made, but no amount will be allowed for anticipated profit on unperformed services.

c. If the termination is due to failure to fulfill the contractor's obligations, the Sponsor may take over the work and prosecute the same to completion by contract or otherwise. In such case, the contractor is liable to the Sponsor for any additional cost occasioned to the Sponsor thereby.

d. If, after notice of termination for failure to fulfill contract obligations, it is determined that the contractor had not so failed, the termination will be deemed to have been effected for the convenience of the Sponsor. In such event, adjustment in the contract price will be made as provided in paragraph 2 of this clause.

e. The rights and remedies of the sponsor provided in this clause are in addition to any other rights and remedies provided by law or under this contract.

22. TRADE RESTRICTION

(Reference: 49 CFR part 30)

22.1. APPLICABILITY.

The trade restriction clause applies to all AIP-funded projects and must be included in all contracts and subcontracts.

22.2. MANDATORY CONTRACT LANGUAGE.

The mandatory language is as follows:

TRADE RESTRICTION CLAUSE

The contractor or subcontractor, by submission of an offer and/or execution of a contract, certifies that it:

a. is not owned or controlled by one or more citizens of a foreign country included in the list of countries that discriminate against U.S. firms published by the Office of the United States Trade Representative (USTR);

b. has not knowingly entered into any contract or subcontract for this project with a person that is a citizen or national of a foreign country on said list, or is owned or controlled directly or indirectly by one or more citizens or nationals of a foreign country on said list;

c. has not procured any product nor subcontracted for the supply of any product for use on the project that is produced in a foreign country on said list.

Unless the restrictions of this clause are waived by the Secretary of Transportation in accordance with 49 CFR 30.17, no contract shall be awarded to a contractor or subcontractor who is unable to certify to the above. If the contractor knowingly procures or subcontracts for the supply of any product or service of a foreign country on said list for use on the project, the Federal Aviation Administration may direct through the Sponsor cancellation of the contract at no cost to the Government.

Further, the contractor agrees that, if awarded a contract resulting from this solicitation, it will incorporate this provision for certification without modification in each contract and in all lower tier subcontracts. The contractor may rely on the certification of a prospective subcontractor unless it has knowledge that the certification is erroneous.

The contractor shall provide immediate written notice to the sponsor if the contractor learns that its certification or that of a subcontractor was erroneous when submitted or has become erroneous by reason of changed circumstances. The subcontractor agrees to provide written notice to the contractor if at any time it learns that its certification was erroneous by reason of changed circumstances.

This certification is a material representation of fact upon which reliance was placed when making the award. If it is later determined that the contractor or subcontractor knowingly rendered an erroneous certification, the Federal Aviation Administration may direct through the Sponsor cancellation of the contract or subcontract for default at no cost to the Government.

Nothing contained in the foregoing shall be construed to require establishment of a system of records in order to render, in good faith, the certification required by this provision. The knowledge and information of a contractor is not required to exceed that which is normally possessed by a prudent person in the ordinary course of business dealings.

This certification concerns a matter within the jurisdiction of an agency of the United States of America and the making of a false, fictitious, or fraudulent certification may render the maker subject to prosecution under Title 18, United States Code, Section 1001.

23. TEXTING WHEN DRIVING

(References: Executive Order 13513, and DOT Order 3902.10)

23.1. APPLICABILITY.

In accordance with Executive Order 13513, "Federal Leadership on Reducing Text Messaging While Driving" (10/1/2009) and DOT Order 3902.10 "Text Messaging While Driving" (12/30/2009), FAA encourages recipients of Federal grant funds to adopt and enforce safety policies that decrease crashes by distracted drivers, including policies to ban text messaging while driving when performing work related to a grant or sub-grant.

23.2. MANDATORY CONTRACT LANGUAGE.

By adopting the Applicability Language, the following contract language will meet the intent and requirement for Texting When Driving:

TEXTING WHEN DRIVING

In accordance with Executive Order 13513, "Federal Leadership on Reducing Text Messaging While Driving" (10/1/2009) and DOT Order 3902.10 "Text Messaging While Driving" (12/30/2009), FAA encourages recipients of Federal grant funds to adopt and enforce safety policies that decrease crashes by distracted drivers, including policies to ban text messaging while driving when performing work related to a grant or sub-grant.

The Contractor must promote policies and initiatives for employees and other work personnel that decrease crashes by distracted drivers, including policies to ban text messaging while driving. The Contractor must include these policies in each third party subcontract involved on this project.

24. VETERAN'S PREFERENCE

(Reference: 49 USC § 47112(c))

24.1. APPLICABILITY.

The Veteran's preference clause found in 49 USC § 47112(c) applies to all AIP-funded projects and must be included in all contracts and subcontracts that involve labor

24.2. MANDATORY CONTRACT LANGUAGE.

The regulation does not prescribe mandatory language, however the following clause represents sample language that meets the intent of 49 USC § 47112(c) is as follows:

VETERAN'S PREFERENCE

In the employment of labor (except in executive, administrative, and supervisory positions), preference must be given to Vietnam era veterans, Persian Gulf veterans, Afghanistan-Iraq war veterans, disabled veterans, and small business concerns owned and controlled by disabled veterans as defined in Title 49 United States Code, Section 47112. However, this preference shall apply only where the individuals are available and qualified to perform the work to which the employment relates.

EXHIBIT D

INSURANCE AND BONDING REQUIREMENTS / CONSTRUCTION SAFETY AND HEALTH PLAN

EXHIBIT D
INSURANCE & BONDING REQUIREMENTS
FC-8071 EXPLOSIVE DETECTION SYSTEM (EDS) RECAPITALIZATION AND OPTIMIZATION

A. Preamble

The following requirements apply to all work under the Agreement. Compliance is required by Service Provider. **To the extent permitted by applicable law, the City of Atlanta ("City") reserves the right to adjust or waive any insurance or bonding requirements contained in this Exhibit D and applicable to the Agreement.** For all purposes hereunder, including but not limited to any Additional Insured Endorsements, the City shall include the City of Atlanta, its elected officials, officers, agents, and employees.

1. Evidence of Insurance and Bonding Required Before Work Begins

No work under the Agreement may be commenced until all insurance and bonding requirements contained in this Exhibit D, or required by applicable law, have been complied with and evidence of such compliance satisfactory to City as to form and content has been filed with City.

At the time Service Provider submits to City its executed Agreement, Service Provider must satisfy all insurance and bonding requirements required by this Exhibit D and applicable by law, and provide the required written documentation to City evidencing such compliance. In the event that Service Provider does not comply with such submittal requirements within the time period established by the solicitation documents applicable to the Agreement, City may, in addition to any other rights City may have under the solicitation documents applicable to the Agreement or under applicable law, make a claim against any proposal security provided by Service Provider.

If the Service Provider is an entity (e.g., corporation, limited liability company, etc.) or a partnership (e.g., general partnership, limited partnership, joint venture, etc.) then Service Provider shall tender insurance certificates and bonds in the name of Service Provider's entity or partnership as the primary insured.

2. Project Number & Name

The project number (FC-8071) and name (Explosive Detection System (EDS) Recapitalization and Optimization) must be referenced in the description section of the insurance certificate.

3. Minimum Financial Security Requirements

All companies providing insurance required by this Exhibit D must meet certain minimum financial security requirements. These requirements must conform to the

ratings published by A.M. Best & Co. in the current Best's Key Rating Guide - Property-Casualty. Upon request, the Service Provider must submit the ratings for each company to the City.

For all agreements, regardless of size, companies providing insurance or bonds under the agreement must meet the following requirements:

i) Best's Rating not less than A-;
ii) Best's Financial Size Category not less than Class VII;
iii) Companies must be authorized to conduct and transact insurance contracts by the Insurance Commissioner, State of Georgia; and
iv) All performance and payment bonds must be underwritten by a U.S. Treasury Circular 570 listed company.

If the issuing company does not meet these minimum requirements, or for any other reason is or becomes unsatisfactory to City, City will notify Service Provider in writing. Service Provider must promptly obtain a new policy or bond issued by an insurer acceptable to City and submit to City evidence of its compliance with these conditions.

Service Provider's failure to comply with all insurance and bonding requirements set forth in this Exhibit D and applicable to the Agreement will not relieve Service Provider from any liability under the Agreement. Service Provider's obligations to comply with all insurance and bonding requirements set forth in Exhibit D and applicable to the Agreement will not be construed to conflict with or limit Service Provider's indemnification obligations under the Agreement.

4. Insurance and Bonds Required for Duration of Contract

All insurance and bonds required by this Exhibit D must be maintained during the entire term of the Agreement, including any renewal or extension terms, and until all work has been completed to the satisfaction of City.

5. Notices of Cancellation & Renewal

Service Provider must, notify the City of Atlanta in writing at the address listed below by mail, hand-delivery or facsimile transmission, within two (2) business days of any notices received from any insurance carriers providing insurance coverage or surety providing bonds under this Agreement and Exhibit D (including any attachments thereto) that Service Provider receives concerning the proposed cancellation, or termination of coverage or security:

Enterprise Risk Management
68 Mitchell St., Suite 9100
Atlanta, GA 30303

Facsimile No. (404) 658-7450

Confirmation of any mailed notices must be evidenced by return receipts of registered or certified mail.

Service Provider shall provide the City with evidence of required insurance and bonding prior to the commencement of this Agreement, and, thereafter, with a certificate and/or bonds evidencing renewals or changes thereto at least fifteen (15) days prior to the expiration of previously provided certificates and/or bonds.

6. Agent Acting as Authorized Representative

Each and every agent acting as Authorized Representative on behalf of a company affording coverage under this Agreement shall warrant when signing the Acord Certificate of Insurance that specific authorization has been granted by the Companies for the Agent to bind coverage as required and to execute the Acord Certificates of Insurance as evidence of such coverage.

In addition, each and every agent shall warrant when signing the Acord Certificate of Insurance that the Agent is licensed to do business in the State of Georgia and that the Company or Companies are currently in good standing in the State of Georgia.

7. Certificate Holder

The **City of Atlanta** must be named as certificate holder. All notices must be mailed to the attention of **Enterprise Risk Management** at **68 Mitchell Street, Suite, 9100, Atlanta, Georgia 30303.**

8. Additional Insured Endorsements – Form CG 20 26 07 04 or Equivalent

City shall be covered as an Additional Insured, as its interest may appear, under any and all insurance required pursuant to this Agreement, and such insurance shall be primary and non-contributory with respect to the Additional Insured. However, this requirement does not apply to Workers' Compensation or Professional Liability Insurance. Additional insured status extending to ongoing and completed operations per CG 20 26 07 04 or their carrier equivalent shall be provided. Additional insured status shall be maintained following project completion equivalent to the statute of repose in the State of Georgia.

NOTE: A copy of the Additional Insured Endorsement or its equivalent must be forwarded to the Risk Management Department as soon as practicable but in no event more than ten (10) days after the effective date of the Agreement.

9. Mandatory Sub-Contractor/Consultant Compliance

Service Provider must require and ensure that all of Service Provider's subcontractors operating under the Agreement at any level are sufficiently insured and bonded.

10. Self-Insured Retentions, Deductibles or Similar Obligations

Any self-insured retention, deductible or similar obligation will be the sole responsibility of the Service Provider.

11. Waiver of Subrogation in favor of the City of Atlanta

The certificates of Commercial General Liability Insurance and Commercial Automobile Liability Insurance tendered by the Service Provider must clearly indicate a waiver of subrogation in favor of the City of Atlanta.

B. Workers' Compensation and Employer's Liability Insurance

Service Provider must procure and maintain Workers' Compensation and Employer's Liability Insurance in the following limits to cover each employee who is or may be engaged in work under the Agreement:

Workers' Compensation	**Statutory**
Employer's Liability:	
Bodily Injury by Accident/Disease	**$1,000,000 each accident**
Bodily Injury by Accident/Disease	**$1,000,000 each employee**
Bodily Injury by Accident/Disease	**$1,000,000 policy limit**

C. Commercial General Liability Insurance

Service Provider must procure and maintain Commercial General Liability Insurance on Form CG 00 00 01 (or equivalent) in an amount not less than **$1,000,000 per occurrence subject to a $2,000,000 aggregate**. The following indicated extensions of coverage must be provided:

- ☒ Contractual Liability
- ☒ Broad Form Property Damage
- ☒ Premises Operations
- ☒ Personal Injury
- ☒ Advertising Injury
- ☒ Fire Legal Liability
- ☒ Independent Contractor/Consultants/SubContractor/Consultants
- ☒ Products – Completed Operations
- ☒ Additional Insured Endorsement (primary& non-contributing in favor of the City of Atlanta)

☒ Waiver of Subrogation in favor of the City of Atlanta

D. Commercial Automobile Liability Insurance

Service Provider must procure and maintain Automobile Liability Insurance in an amount not less than **$1,000,000** Bodily Injury and Property Damage combined single limit. The following indicated extensions of coverage must be provided:

☒ Owned, Non-owned & Hired Vehicles
☒ Waiver of Subrogation in favor of the City of Atlanta

If Service Provider does not own any automobiles in the corporate name, non-owned vehicle coverage will apply and must be endorsed on either Service Provider's personal automobile policy or the Commercial General Liability coverage required under this **Exhibit D**.

Additionally, in accordance with Section 22-181(b) of Chapter 22, Code of Ordinances of the City of Atlanta, all vehicles requiring access to the restricted areas of the airport must be covered by an automobile liability policy in the minimum amount of **Ten Million Dollars ($10,000,000)** combined single limit for personal injury and property damage. The $10,000,000 limit of liability will also be imposed on any parties transporting workers, materials and/or equipment to the Airport site from parking lots or similar facilities.

E. Excess or Umbrella Liability Insurance

☒ May be used to achieve minimum general and auto liability limits
☒ Coverage must follow form with primary policy
☒ Coverage must be as broad as primary policy

F. Builders Risk / Installation Floater

Contractor/Consultant shall procure and maintain policy for Builders Risk/ Installation Floater with all risk coverage to cover damage or destruction to renovations, repairs or equipment being installed or otherwise being handled or stored by the Contractor, including off-site storage, transit and installation. The coverage must be in an amount equal to **100 percent of the value of the contract**. The following indicated extensions of coverage must be provided:

☒ All Risk Coverage
☒ Operational Testing Coverage included
☒ Loss Payee Endorsement

G. Professional Liability /Network Security and Privacy Policy

Service Provider shall procure and maintain during the life of this contract Professional Liability/Network Security and Privacy Insurance in an amount of **$2,000,000** per occurrence

and annual aggregate. The policy will fully address the Contractor/Consultant's professional services associated with the scope of work contained in this document. The policy will include at least a three year Extended Reporting Provision. As well as these extensions of coverage:

- ☒ Damages arising from a failure of computer security, or a wrongful release of private information
- ☒ Cost to notify consumers of a release of private information and to provide credit-monitoring or other remediation services in the event of a covered incident.

H. Performance and Payment Bonds

At, or prior to, Service Provider's execution of the Agreement, Service Provider must, at its own expense, deliver to the City a Performance and a Payment Bond each in an amount equal to one hundred percent (100%) of one (1) year value of the contract naming the City as co-obligee and issued by a surety company or companies in such form as approved by the City's Attorney as attached hereto at **Exhibit D-1**. The bonds must be renewed annually at one hundred percent (100%) of the then current year's value as specified in the Agreement. The bonds must be kept in full force and effect during the Term and any renewals. In lieu of a Performance Bond, Service Provider may submit to the City an Irrevocable Letter of Credit in a form acceptable to City, in its sole discretion.

1. In addition, prior to the commencement of any construction work by or at the instance of Tenant within the Premises, Service Provider must provide to City a fixed price contract or contracts for all work to be performed within the Premises, which contract(s) shall be insured by, and Tenant shall provide to the City, a Payment Bond in an amount equal to one hundred percent (100%) of the work specified in such contract(s) and acceptable to the City's Chief Financial Officer and in such form as approved by the City Attorney. The Payment Bond shall name the City as the Obligee, shall meet the other requirements of the Agreement, and shall remain in full force and effect until: (i) all Tenant Improvements are completely and fully paid for, (ii) certificates of occupancy have been issued for the Premises, (iii) final lien waivers have been obtained from all contractors and subcontractors; (iv) the City has approved the final construction of the Tenant Improvements; and (v) the applicable limitations period under Georgia law for the commencement of a suit against the Payment Bond has lapsed.

2. The bonds must be issued as security for the faithful performance of this Agreement, including, maintenance and guarantee provisions, its covenants, stipulations and agreements of the Agreement, the payment of all bills and obligations arising out of the performance of its obligations under the Agreement, which bills and obligations might or would in any manner become a claim against the City, and guaranteeing all services and work set forth in the Agreement against faulty materials or poor workmanship, or both, in accordance with any warranty provisions of the Agreement.

3. The surety company issuing the bonds must give the Aviation General Manager notice in writing by registered mail at least sixty (60) days prior to an anniversary date of the bonds of its intention not to renew or to terminate the bonds.

4. A Corporate Surety that is satisfactory to City, authorized to do business in the State of Georgia, and listed in the latest issue of U.S. Treasury Circular 570 must execute the bonds.

5. An agent of the Surety residing in the State of Georgia must execute the bonds. The date of the Bonds must be the same as the date of execution of the Agreement by City. The Surety must appoint an agent for service in Atlanta, Georgia, upon whom all notices must be shown on each Bond. The person executing the Bonds on behalf of the Surety must file with the Bonds a general power of attorney unlimited as to amount and type of Bonds covered by such power of attorney, and certified to by an official of said Surety. The Bonds must be on forms provided by City. The Agreement will not be executed by City until after the approval of the Bonds by City's Attorney.

6. For additional information regarding Payment and Performance Bonds, please see **Exhibit D-1** attached hereto and incorporated herein by this reference.

EXHIBIT D-1
PERFORMANCE AND PAYMENT BONDS

1. At, or prior to, Service Provider's execution of the Agreement, Service Provider must, at its own expense, deliver to the City a Performance and a Payment Bond each in an amount equal to one hundred percent (100%) of the first year's contract value as specified in the Agreement, naming the City as co-obligee and issued by a surety company or companies in such form as approved by the City's Attorney as attached hereto at **Exhibit D-1**. The bonds must be renewed annually at one hundred percent (100%) of the then current year's contract value as specified in the Agreement. The bonds must be kept in full force and effect during the Term and any renewals. In lieu of a Performance Bond, Service Provider may submit to the City an Irrevocable Letter of Credit in a form acceptable to City, in its sole discretion.

2. The bonds must be issued as security for the faithful performance of this Agreement, including, maintenance and guarantee provisions, its covenants, stipulations and agreements of the Agreement, the payment of all bills and obligations arising out of the performance its obligations under the Agreement, which bills and obligations might or would in any manner become a claim against the City, and guaranteeing all services and work set forth in the Agreement against faulty materials or poor workmanship, or both, in accordance with any warranty provisions of the Agreement.

3. The surety company issuing the bonds must give the City notice in writing by registered mail at least sixty (60) days prior to an anniversary date of the bonds of its intention not to renew or to terminate the bonds.

4. A Corporate Surety that is satisfactory to City, authorized to do business in the State of Georgia, and listed in the latest issue of U.S. Treasury Circular 570 must execute the bonds.

5. An agent of the Surety residing in the State of Georgia must execute the bonds. The date of the Bonds must be the same as the date of execution of the Agreement by City. The Surety must appoint an agent for service in Atlanta, Georgia upon whom all notices must be shown on each Bond. The person executing the Bonds on behalf of the Surety must file with the Bonds a general power of attorney unlimited as to amount and type of Bonds covered by such power of attorney, and certified to by an official of said Surety. The Bonds must be on forms provided by City. The Agreement will not be executed by City until after the approval of the Bonds by City's Attorney.

EXHIBIT D-1

ATTACHMENT 1

Performance Bond

INSTRUCTIONS

1. **This form is required for use in connection with the Agreement identified on its face. There shall be no deviation from this form without approval by the City.**

2. **The full legal name and business address of the Principal shall be inserted in the space designated "Principal" on the face of the form. The bond shall be signed by an authorized person. Where such person is signing in a representative capacity (e.g., an attorney-in-fact), but is not a member of the firm, partnership, or joint venture, or an office of the corporation involved, evidence of this authority must be furnished.**

3. **Corporation executing the bond as surety must be among those appearing on the U.S. Treasury Department's most current list of approved sureties and must be acting within the amounts and limitations set forth therein.**

4. **Corporate surety shall be duly authorized by the Commissioner of Insurance of the State of Georgia to transact surety business in the State of Georgia.**

5. **Do not date this bond. The City will date this bond the same date or later than the date of the Agreement.**

6. **The Surety shall attach a duly authorized power-of-attorney authorizing signature on its behalf of any attorney-in-fact.**

7. **Corporations executing the bond shall affix their corporate seals. Individuals shall execute the bond opposite the word "Seal."**

8. **The name of each person signing this bond shall be typed or printed in the space provided.**

Performance Bond

"City" City of Atlanta, Georgia
"Project" Explosive Detection System (EDS) Recapitalization and Optimization
"FC No." 8071
"Principal"
Type of Organization ("X" one): _____ Individual
_____ Partnership
_____ Joint Venture
_____ Corporation

"Surety:" (Name and Business Address) _____
_____
_____

duly authorized by the Commissioner of Insurance of the State of Georgia to transact surety business in the State of Georgia.

"Agreement:" Agreement between Principal and City, dated _____ day of _____, 20___, regarding performance of Work relative to the Project.

"Penal Sum:" _____

KNOW ALL MEN BY THESE PRESENTS, that we, the Principal and Surety hereto, as named above, are held and firmly bound to the City in the above Penal Sum for the payment of which well and truly to be made we bind ourselves, our heirs, executors, administrators, successors, jointly and severally. Principal and Surety agree that the Penal Sum shall be equal to or greater than one hundred percent (100%) of the total Management Fee as specified in the Agreement for the first year of the Term as defined therein. If this bond is renewed annually as described below, then Principal and Surety agree that the Penal Sum shall equal or exceed the Management Fee as specified in the Agreement for the same 12-month period of the annual bond.

WHEREAS, the Principal and the City entered into the Agreement identified above;

NOW, THEREFORE, the conditions of this obligation are such that if the Principal shall faithfully and fully comply with, perform and fulfill all of the undertakings, covenants, conditions and all other of the terms and conditions of said Agreement, including any and all duly authorized modifications of such Agreement, within the original term of such Agreement and any extensions thereof, which shall include, but not be limited to any obligations created by way of warranties and/or guarantees for workmanship and materials which warranty and/or guarantee may extend for a period of time beyond completion of said Agreement, this obligation shall be void; otherwise, of full force and effect.

And the Surety to this bond, for value received, agrees that no modification, change, extension of time, alteration or addition to the terms of the Agreement or to the Work to be performed thereunder shall in any way affect its obligation on this bond, and it does hereby waive notice of any such modification, change, extension of time, alteration or addition to the terms of the Agreement or the Work. Surety further agrees that it will provide City with at least 60 days' written notice by registered mail prior to any suspension, cancellation or termination of this bond; otherwise, this bond shall remain in full force and effect for a minimum of one (1) year (i.e., twelve (12) full months) beginning from the Effective Date of the Agreement. This bond may be renewed on an annual basis provided the renewal covers the requisite Penal Sum as required above; and, in the event Surety declines to renew this bond, Surety agrees that it will provide City with at least 60 days' written notice by registered mail prior to the expiration date of bond.

It is agreed that this bond is executed pursuant to and in accordance with the provision of O.C.G.A. Sections 13-10-1 and 36-82-101, *et seq.* and is intended to be and shall be construed to be a bond in compliance with the requirements thereof, though not restricted thereto.

IN WITNESS WHEREOF, the Principal and the Surety have caused these presents to be duly signed and sealed this _____ day of _____, 20___.

PRINCIPAL: _____

_____
President/Vice President (Sign)

_____
President/Vice President (Type or Print)

Attested to by:

_____
Secretary/Assistant Secretary (Seal)

SURETY: _____

By: _____
Attorney-in-Fact (Sign)

_____
Attorney-in-Fact (Type or Print)

APPROVED AS TO FORM

_____
Associate/Assistant City Attorney

APPROVED

_____
City's Chief Financial Officer

EXHIBIT D-1

ATTACHMENT 2

Payment Bond

INSTRUCTIONS

1. **This form is required for use in connection with the Agreement identified on its face. There shall be no deviation from this form without approval by the City.**

2. **The full legal name and business address of the Principal shall be inserted in the space designated "Principal" on the face of the form. The bond shall be signed by an authorized person. Where such person is signing in a representative capacity (e.g., an attorney-in-fact), but is not a member of the firm, partnership, or joint venture, or an office of the corporation involved, evidence of this authority must be furnished.**

3. **Corporation executing the bond as surety must be among those appearing on the U.S. Treasury Department's most current list of approved sureties and must be acting within the amounts and limitations set forth therein.**

4. **Corporate surety shall be duly authorized by the Commissioner of Insurance of the State of Georgia to transact surety business in the State of Georgia.**

5. **Do not date this bond. The City will date this bond the same date or later than the date of the Agreement.**

6. **The Surety shall attach a duly authorized power-of-attorney authorizing signature on its behalf of any attorney-in-fact.**

7. **Corporations executing the bond shall affix their corporate seals. Individuals shall execute the bond opposite the word "Seal."**

8. **The name of each person signing this bond shall be typed or printed in the space provided.**

Payment Bond

"City" City of Atlanta, Georgia
"Project" Explosive Detection System (EDS) Recapitalization and Optimization
"FC No." 8071
"Principal"
Type of Organization ("X" one): _____ Individual
_____ Partnership
_____ Joint Venture
_____ Corporation

"Surety:" (Name and Business Address) _____
_____
_____.

duly authorized by the Commissioner of Insurance of the State of Georgia to transact surety business in the State of Georgia.

"Agreement:" Agreement between Principal and City, dated _____ day of _____, 20___, regarding performance of Work relative to the Project.

"Penal Sum:" _____

KNOW ALL MEN BY THESE PRESENTS, that we, the Principal and Surety hereto, as named above, are held and firmly bound to the City in the above Penal Sum for the payment of which well and truly to be made we bind ourselves, our heirs, executors, administrators, successors, jointly and severally. Principal and Surety agree that the Penal Sum shall be equal to or greater than one hundred percent (100%) of the total Management Fee as specified in the Agreement for the first year of the Term as defined therein. If this bond is renewed annually as described below, then Principal and Surety agree that the Penal Sum shall equal or exceed the Management Fee as specified in the Agreement for the same 12-month period of the annual bond.

WHEREAS, the Principal and the City entered into the Agreement identified above;

NOW, THEREFORE, the conditions of this obligation are such that if the Principal shall faithfully and fully comply with, perform and fulfill all of the undertakings, covenants, conditions and all other of the terms and conditions of said Agreement, including any and all duly authorized modifications of such Agreement, within the original term of such Agreement and any extensions thereof, which shall include, but not be limited to any obligations created by way of warranties and/or guarantees for workmanship and materials which warranty and/or guarantee may extend for a period of time beyond completion of said Agreement, this obligation shall be void; otherwise, of full force and effect.

And the Surety to this bond, for value received, agrees that no modification, change, extension of time, alteration or addition to the terms of the Agreement or to the Work to be performed thereunder shall in any way affect its obligation on this bond, and it does hereby waive notice of any such modification, change, extension of time, alteration or addition to the terms of the Agreement or the Work. Surety further agrees that it will provide City with at least 60 days' written notice by registered mail prior to any suspension, cancellation or termination of this bond; otherwise, this bond shall remain in full force and effect for a minimum of one (1) year (i.e., twelve (12) full months) beginning from the Effective Date of the Agreement. This bond may be renewed on an annual basis provided the renewal covers the requisite Penal Sum as required above; and, in the event Surety declines to renew this bond, Surety agrees that it will provide City with at least 60 days' written notice by registered mail prior to the expiration date of bond.

It is agreed that this bond is executed pursuant to and in accordance with the provision of O.C.G.A. Sections 13-10-1 and 36-82-101, *et seq.* and is intended to be and shall be construed to be a bond in compliance with the requirements thereof, though not restricted thereto.

IN WITNESS WHEREOF, the Principal and the Surety have caused these presents to be duly signed and sealed this _____ day of _____, 20___.

PRINCIPAL: _____

_____
President/Vice President (Sign)

_____
President/Vice President (Type or Print)

Attested to by:

_____
Secretary/Assistant Secretary (Seal)

SURETY: _____

By: _____
Attorney-in-Fact (Sign)

_____
Attorney-in-Fact (Type or Print)

APPROVED AS TO FORM

_____
Associate/Assistant City Attorney

APPROVED

_____
City's Chief Financial Officer

EXHIBIT D

CONSTRUCTION SAFETY AND HEALTH PLAN (NON-OCIP)

1.0 Safety and Health Plan.

1.1 The City of Atlanta ("CITY") has established this Construction Safety and Health Plan ("Plan") to promote safety and to minimize and control hazards and risks associated with construction projects at the Airport.

1.2 It is our goal to have zero safety incident Projects where all personnel can perform assigned tasks in a safe environment in accordance with governmental requirements and industry standards as specified in paragraph 2.0 of this document.

1.3 In this Plan, CITY's Safety Representatives include City of Atlanta's Office of Enterprise Risk Management, the Program Safety Manager, designated CITY Safety professionals performing as Owner Representative, and any other designee of CITY. In the event of any conflicting determinations among the CITY's Safety Representatives and / or consultants, the decision of the Director of CITY's Office of Enterprise Risk Management shall prevail.

1.4 The following CONTRACTOR submitted plans require approval by CITY before construction work can be started:

1.4.1 Site Specific Safety Plan (see paragraph 8.0 of this document)

1.4.2 Fire Prevention Plan (see paragraph 9.0 of this document)

1.4.3 Hazard Communication Plan (see paragraph 10.0 of this document)

1.4.4 Traffic Control Plan (see paragraph 11.0 of this document)

1.4.5 Trench Excavation Plan (if required) (See paragraph 12.0 of this document)

1.5 No contractor or subcontractor personnel will be allowed on a construction site until insurance coverage is verified; the Project Safety Manager is approved; and required Plans, per paragraph 1.4, are approved.

2.0 Government Requirements and Industry Standards.

2.1.1 CONTRACTOR will comply with all Governmental Requirements and industry standards pertaining to safety and health at any Jobsite, including, but not limited to:

2.1.1.1 OSHA Construction Safety and Health Regulations, CFR Part 1926
2.1.1.2 CFR Part 1910
2.1.1.3 NFPA Standards
2.1.1.4 Operational Safety on Airport Construction (FAA 150/5370-2C)
2.1.1.5 N.E.C Standards
2.1.1.6 ANSI Standards
2.1.1.7 EPA Standards
2.1.1.8 MUTCD Standards

3.0 Responsibilities. This Plan is part of the Contract Documents. CONTRACTOR must, at all times, comply with all aspects of this Plan as well as ensure that all employees and subcontractors comply with the provisions of this Plan. CONTRACTOR will provide to CITY, and any person designated by CITY, access to CONTRACTOR personnel and to CONTRACTOR owned facilities for the purpose of performing audits and inspections of CONTRACTOR, CONTRACTOR personnel and/or any of the relevant information relating to the Plan and/or this Agreement. CONTRACTOR is subject to being audited under this Plan at any time during the term of this Agreement. CONTRACTOR shall provide full cooperation to CITY and its designated persons in connection with audit functions and examinations by regulatory authorities.

3.1 **Contractor Responsibilities.**

3.1.1 CONTRACTOR must include the obligations of this Plan in all of its written employment agreements, Subcontracts, purchase orders and any other documents utilized by it in obtaining goods and services relating to CONTRACTOR's performance of this Contract and Work on the Project. The failure of CONTRACTOR to submit any reports required by this Plan or to violate any of its provisions shall be sufficient cause to terminate CONTRACTOR'S right to proceed with the work. Stoppage or termination to proceed under this provision should not give rise to CONTRACTOR's right to seek damages or other relief for any resulting delay. **Noncompliance with any provision is sufficient cause for the City to delay approval of CONTRACTOR'S invoices for progress payments.**

3.1.2 CONTRACTOR **must conduct** at least one (1) inspection per day of CONTRACTOR's Work, Jobsites and storage areas additionally, based on the hazards associated with the Projects' Scope of Work, the CONTRACTOR's Project Safety Manager shall conduct as many daily inspections as required to ensure that Safe Work Environments and Best Safe Practices and worker behavior are maintained at all times.

3.1.3 Provide for training of all Employees in all Plan requirements, to include CONTRACTOR safety orientation as well as trade training.

3.1.4 Immediately report to CITY'S Safety Representatives of any death, injury or damage to property at any Jobsite (or Work storage area) on the Airport or any other property adjacent to or near the Airport at which Work under this Contract is performed, per paragraph 7.0 of this document.

3.1.5 Full cooperation in the conduct of inspections by CITY's Safety Representatives, governmental agencies and other agencies of competent jurisdiction, e.g. OSHA. Copies of citation notices received by CONTRACTOR or its subcontractors from such agencies must be submitted to the CITY's Safety Representatives immediately upon receipt.

3.1.6 Use of equipment and protective devices as required by applicable regulatory agencies and CITY.

3.1.7 Immediate correction by CONTRACTOR of any unsafe conditions or unsafe acts by its employees, subcontractors, vendors, suppliers, etc.

3.1.8 Medical surveillance requirements for personnel exposed to hazardous substances, e.g. radiation badges.

3.1.9 Safety requirements and procedures for decontamination facilities, e.g. protective clothing and warning signs.

3.1.10 The use of forms and other information attached to this Plan, or such other forms or versions of those forms that CITY may, from time to time, direct CONTRACTOR to use.

3.1.11 Thorough investigation of safety incidents to ensure the inclusion of witness statements, completed incident forms, development of lessons learned that are fully distributed through the contractor's

team and its subcontractor's, and incident investigation follow-up when new information has been obtained.

4.0 CONTRACTOR Obligations. The CONTRACTOR acknowledges that the effectiveness of this Plan depends on the active participation and cooperation of the CONTRACTOR, its Subcontractors and all Employees.

4.1 **General.** CONTRACTOR must:

4.1.1 Employ a full-time site dedicated designated OSHA Authorized Construction Trainer (OSHA 500) Project Safety Manager, per shift. The Project Safety Manager shall ensure that all of the Contractor's and its Subcontractors' activities under this Contract are in compliance with this Plan, the Contractor's Site-Specific Safety Plan, all Governmental Requirements and applicable industry standards. The CONTRACTOR's Project Safety Manager must submit weekly reports to the CITY's Safety Representatives each Monday on the previous week's inspections.

4.1.1.1 The CONTRACTOR's responsibility cannot be delegated to a subcontractor, suppliers or other persons. CONTRACTOR's full-time Project Safety Manager shall conduct the CONTRACTOR's safety program and monitor the CONTRACTOR'S subcontractors' compliance with the requirements of this document to prevent unsafe conditions and accidents. CONTRACTOR shall submit the qualifications (resumes) of all proposed safety representatives to the CITY's Safety Representatives for review and consent prior to mobilization on the site. If a subcontractor's projected workforce is a total of twenty-five (25) or less, an appropriately trained (minimum OSHA 30-Hour Training Certificate) and experienced working supervisor shall be assigned the duties of Safety Representative. If a subcontractor's projected workforce is twenty-six (26) or more, a full-time (non-working) safety professional (minimum OSHA 30-Hour Training Certificate) shall be assigned to the site. When a subcontractor's total trade work force exceeds one hundred fifty (150) or more, an additional safety professional (minimum OSHA 30-Hour Training Certificate) shall be assigned. CONTRACTOR will be in compliance with paragraph 4.2: *Training Attendance Requirements*.

4.1.2 Comply with applicable Governmental Requirements, industry standards, and Airport Regulations and Requirements, as outlined in this Plan and the Contract Documents.

4.1.3 Provide safety incident data to the City's Safety Representatives, as required.

4.1.4 CONTRACTOR is ultimately responsible for accident prevention and Jobsite safety. This responsibility may not be delegated to Subcontractors or other Persons.

4.1.5 **Experience Modification Rate (EMR) Requirements for Subcontractor(s):**

4.1.5.1 Contractor shall not, without the prior written approval of ENGINEER, subcontract with any entity which exceeds the following safety ratings for the previous year.

4.1.5.1.1	EMR:	1.00
4.1.5.1.2	LWDC:	2.00
4.1.5.1.3	OSHA Recordable:	4.00

4.1.5.2 If the Contractor elects to enter into a subcontract with any entity that exceeds the above minimum requirements, the Contractor shall submit supporting documents to the CITY identifying the reason(s) for the Subcontractor's rate(s) being higher than the above stipulated rates. The additional documents to be submitted include the previous three (3) years OSHA 300 Logs, the previous three (3) years EMR ratings and any other documents deemed necessary by the ENGINEER to complete the review. In addition, the Contractor will provide, in writing, to the ENGINEER those additional safety oversight and mitigation measures to include changes to its work plan that the Contractor will implement in monitoring and in assisting the "at risk" Subcontractor until that portion of the Contract is complete. The ENGINEER and the Program Safety Manager will review the required submitted documents. The ENGINEER and Program

Safety Manager will make a recommendation for approval or denial to the Department of Aviation Risk Manager or Designee who will render a decision regarding acceptance of the "at risk" Subcontractor on the project site.

4.2 **Training Attendance Requirements.**

4.2.1 All Employees must attend a required Project Safety Orientation Class provided by the CONTRACTOR prior to starting Work on any Airport project. The orientation will cover all requirements outlined in section 4.4.1.

4.2.2 CONTRACTOR, upon request, must provide evidence of the competent person's training for critical items of work (e.g., trench excavation).

4.3 **CONTRACTOR Project Safety Manager Approval Process.**

4.3.1 CONTRACTOR shall submit a resume(s) showing the experience and qualifications for Contractor's proposed Project Safety Manager(s) to the CITY's Safety Representatives prior to mobilization at any Jobsite. The minimum qualifications for a CONTRACTOR Project Safety Manager must have verifiable experience administering a safety program with a comparable size workforce on a similar type project. The Program Safety Manager will review the submitted resumes for the Contractor's proposed original or successor Safety Manager(s) to assure that the minimum qualifications are met. The Program Safety Manager will make a recommendation for approval or denial to the Department of Aviation Risk Manager or Designee, regarding acceptance of the proposed Safety Manager on the Project.

4.3.2 CONTRACTOR's project manager and superintendent must have a minimum of OSHA 30 safety training.

4.3.3 CONTRACTOR's Project Safety Manager must be an OSHA designated Authorized Construction Trainer (OSHA 500).

4.3.4 CONTRACTOR is solely responsible for ensuring that its Project Safety Manager is of the caliber and quality to ensure compliance with the Construction Safety and Health Plan and the Contractor's Site-Specific Safety Plan.

4.3.5 The CITY reserves the right to interview a proposed candidate to

better ascertain knowledge and experience before approving or disapproving a candidate. After the Project Safety Manager is approved, the CITY reserves the right to remove CONTRACTOR'S Project Safety Manager at any time for non-performance and/or non- compliance with the Construction Safety and Health Plan.

4.4 **CONTRACTOR's Project Safety Manager Responsibilities.** Contractor's Project Safety Manager must perform daily safety inspections of all Jobsites to eliminate unsafe acts and/or conditions in violation of the Contract Documents, Contractor's Site-Specific Safety Plan, and OSHA regulations.

4.4.1 Ensure that all workers attend, prior to commencing Work, an orientation program coordinated by the CONTRACTOR that will include, as a minimum, a review of: (a) hazards present in the area of Work; (b) the personal protective equipment and apparel employees must use or wear as specified under OSHA, and this Plan, (c) accident/incident reporting procedures; and (d) the panel of physicians available for treatment. Meetings must be conducted to accommodate all language requirements of the CONTRACTOR's Employees attending.

4.4.2 Ensure all Employees and subcontractors are made aware of the steps to take in the event of an accident or incident and the location of first aid facilities.

4.4.3 Provide weekly written reports to CITY'S Safety Representatives of all observed unsafe conditions or practices at any Jobsite, in violation of the Contract Documents, Contractor's Site-Specific Safety Plan, OSHA, Governmental Requirements or industry standards, specifically detailing all corrective actions taken.

4.4.4 Conduct root cause analysis following ALL personnel, equipment, and near-miss incidents.

4.4.5 Assist Program Safety Manager in the follow up root cause analysis, to include all documentation requested by the Program Safety Manager.

4.4.6 Review safety meeting reports submitted by all Job Superintendents and take necessary action to ensure that meaningful weekly safety meetings are being conducted.

4.4.7 Implement safety-training programs for all Job Superintendents and Employees applicable to specific responsibilities of each position.

4.4.8 Control the availability and use of necessary safety Equipment, including Personal Protective Equipment (PPE) for all Employees.

4.4.9 Cooperate with Safety Managers of other contractors, and take necessary steps to promptly implement appropriate safety recommendations.

4.4.10 Hold safety meetings on a weekly basis. Documentation of topics discussed and attendees must be maintained by CONTRACTOR and provided to the CITY'S Safety Representatives on the Monday following each week of the Project Work. Meetings must be conducted to accommodate all language requirements of the CONTRACTOR's Employees attending.

4.4.11 Provide monthly man-hour reports to the ENGINEER on the Monday following the 10th of the month. CONTRACTOR will ensure compliance of his staff and his subcontractors.

5.0 Miscellaneous Safety Requirements.

5.1 **Safe Operations.** CONTRACTOR is fully and solely responsible for conducting all operations under this Contract at all times in such a manner as to avoid the risk of endangerment to health, bodily harm to individuals and damage to property. CONTRACTOR must continually and diligently inspect all equipment, materials and Work to discover any conditions that might involve such risks and is solely responsible for discovery and correction of any such conditions.

5.2 **Safety Orders.** CONTRACTOR must have copies of appropriate Federal, State and Local Safety Regulations at all Jobsites available for Employees to review and must comply with all provisions.

5.3 **General Safety Provisions**. CONTRACTOR must protect the health and safety of Employees, the public and other Persons, prevent damage to property, Materials, supplies, and Equipment and avoid interrupting the normal operation of the Airport. Although the list below is not exhaustive, CONTRACTOR must:

5.3.1 Ensure only approved safety cans are used for flammable and combustible liquids. "No Smoking or Open Flame" signs and fire extinguishers must be provided where required or as directed by owner's safety representative. Approved safety cans must be metal with flash arresters and spring-loaded tops.

5.3.2 Prevent construction/maintenance activities or materials from hampering any crash-fire-rescue vehicle access to any parts of the Airport.

5.3.3 Continuously remove all bird attractions, such as edibles (food scraps, etc.) or other miscellaneous garbage, trash, or pooled water at all Jobsites where CONTRACTOR is performing Work.

5.3.4 Secure all material and equipment to prevent displacement from wind or jet blast. No survey or barricade tape is to be used on any project inside the Aircraft Movement Area (AMA).

5.3.5 Have temporary electrical service equipped with ground fault circuit interrupters.

5.3.6 Provide adequate and proper fencing, barricading, marking, and lighting of construction, maintenance or other sections of the Airport that are temporarily closed to normal Airport use.

5.3.7 Ensure that all Employees working on, erecting, dismantling or modifying any scaffolding are trained by a competent person.

5.3.8 The CONTRACTOR must ensure all documentation of project safety training as well competent person training are maintained and are easily accessible, if required.

6.0 Protection of the Public and Property. CONTRACTOR must take all steps necessary to ensure protection of the public and property, including, but not limited to, adhering to the following requirements:

6.1 When it is necessary to maintain public use of Jobsites involving sidewalks, entrances to buildings, lobbies, corridors, aisles, stairways, and vehicular roadways, CONTRACTOR must protect the public with appropriate guardrails, lighting, barricades, temporary fences, overhead protection, temporary partitions, shields, and adequate visibility. This mandatory protection must guard against harmful radioactive rays or particles, flying materials, falling or moving materials and equipment, hot or poisonous materials, explosives and explosive atmospheres,

flammable or toxic liquids and gases, open flames, energized electric circuits, or other harmful exposures.

6.2 Sidewalks, entrances to buildings, lobbies, corridors, aisles, doors, or exits that remain in use by the public must be kept clear of obstructions to permit safe ingress and egress of the public at all times.

6.3 Appropriate warnings, signs and instructional safety signs must be conspicuously posted where necessary. In addition, a signalman must control the movement of motorized equipment in areas where the public might be endangered, in accordance with the MUTCD.

6.4 Sidewalk sheds, canopies, catch platforms, and appropriate fences must be provided when it is necessary to maintain public pedestrian traffic adjacent to the erection, demolition or structural alteration of outside walls on any structure.

6.5 A temporary fence must be provided around the perimeter of above ground operations adjacent to public areas, except where a sidewalk shed or fence is required. Perimeter fences must be at least six (6) feet high. They may be constructed of wood or metal frame and sheathing, wire mesh or a combination of both. When the fence is adjacent to a sidewalk near a street intersection, at least the upper section of the fence must be open wire mesh from a point not over four (4) feet above the sidewalk and extending at least twenty-five (25) feet in both directions from the corner of the fence. Fences, which serve also as a component of the airfield security fence or within the Air Operations Area (AOA), shall be constructed in accordance with applicable Airport specifications.

6.6 Safe and adequate pedestrian zones and public transportation stops, as well as pedestrian crossings of the work at intervals not exceeding three hundred (300 feet) (90 m) also must be maintained, unless otherwise modified by CITY.

6.7 CONTRACTOR must furnish, erect, and maintain all barricades, warning signs and markings for hazards necessary to protect the public and the Work. When used during periods of darkness, such barricades, warning signs and hazard markings must be suitably illuminated, in accordance with the MUTCD.

6.8 Warning signs and lights, meeting Airport and FAA requirements, must be maintained from dusk to sunrise along the guardrails, barricades, temporary sidewalks, and at every obstruction to the public. These items

must be placed at both ends of the protections or obstructions and not over twenty (20) feet apart alongside of the protections or obstructions.

6.9 Temporary sidewalks must be provided when a permanent sidewalk is obstructed by CONTRACTOR's operations. Guardrails must be provided on both sides of temporary sidewalks.

6.10 Fuel-burning lanterns, burn barrels, torches, flares, or other open-flame devices, are prohibited.

7.0 Accident Investigation and Reporting.

7.1 **ALL ACCIDENTS, INCIDENTS, NEAR MISSES, UNSAFE ACTS OR UNSAFE CONDITIONS MUST BE IMMEDIATELY REPORTED PER THE INCIDENT REPORTING PROTOCOL AND FOLLOWED UP WITH A WRITTEN REPORT WITHIN TWENTY-FOUR (24) HOURS OF THE OCCURRENCE. THIS PROTOCOL DOCUMENT WILL BE PROVIDED BEFORE START OF WORK TO THE CONTRACTOR.**

7.2 **First Aid. Contractor will maintain a list of company authorized physicians or medical treatment organizations on-site.**

7.3 **Emergency Telephone Numbers. CONTRACTOR must post a list of emergency telephone numbers; to include doc**tor and ambulance, fire, etc., next to telephones at the Project.

7.4 **Posted panel of physicians.** CONTRACTOR must post company approved physicians or medical treatment organizations in a conspicuous location where it can be seen by all Employees.

7.5 CONTRACTOR must secure the affected area immediately after the accident in order to prevent any alteration of the scene before the investigation. The area is to be cordoned off and an individual posted by CONTRACTOR to restrict unauthorized personnel as necessary.

7.6 CONTRACTOR shall not make any news releases or statements to the public regarding any matters related to the Project.

7.7 CONTRACTOR must obtain witness statements when there has been an incident/accident. The witness must sign and date the statement. CONTRACTOR must provide the CITY'S Safety Representatives with all witness statements within twenty-four (24) hours of completion of witness statements.

7.8 The Incident/Accident Report form must be filed within twenty-four (24) hours of the occurrence with the CITY's Safety Representative, and the Program Safety Manager.

7.9 Appropriate drug screening must be conducted after any incident or accident within four (4) hours.

7.10 CONTRACTOR will conduct a root cause analysis with the appropriate parties involved in the incident and other stakeholders within 48 hours of the incident. A detailed summary report of the results of the analysis will be provided to the CITY's Program Safety Manager.

8.0 Site-Specific Safety Plan.

8.1 **General:** This Plan is intended as a universal document for all work the CONTRACTOR is to perform per the Contract Documents. Once approved by the Department of Aviation Risk Manager or designee, it must be fully briefed and disseminated to all contractor personnel and subcontractor personnel. This Plan is a "living document" and will be updated as needed.

8.2 Site specific safety plan must be developed in accordance with guidelines in Appendix 1 of this document.

9.0 Fire Prevention Plan / Program.

9.1 **General.** A Fire Prevention Plan / Program must be submitted in writing to the ENGINEER, for review and coordination with other Jobsite activities prior to commencing Work at any Jobsite. Such program must include:

9.1.1 At a minimum, OSHA and NFPA standards.

9.1.2 Restriction of burning to designated areas. No unauthorized fires shall be permitted on Jobsite.

9.1.3 Assignment of fire watches, trained and equipped to prevent or control fires, for all welding and burning operations. Fires should be monitored for three hours after the burning.

9.1.4 Proper identification, storing, handling and use of inflammable Material to prevent accidental ignition.

9.1.5 Adequate fire extinguishing Equipment appropriate for the operations being performed must be provided and Employees must be trained in the maintenance and use of such Equipment.

9.1.6 Evacuation procedures and fire drills as required by the Program Safety Manager.

10.0 Hazard Communication Plan / Program.

10.1 **General.** A Hazard Communication Plan / Program must be submitted in writing to the ENGINEER or designee for review and coordination with other Jobsite activities prior to commencing Work at any Jobsite. This Program shall include:

10.1.1 Receipt/Identification of Material Safety Data Sheets (MSDS) for Materials being brought onto the Jobsite by CONTRACTOR or its Subcontractors.

10.1.2 Employee training on MSDS's and in the handling and disposal of Materials that fall under statutory regulations.

10.1.3 Medical Surveillance Program. CONTRACTOR will establish a medical surveillance program to monitor the health of employees whose work environment may be exposed to occupational hazards. Health records will be maintained for thirty (30) years after the last date of employment.

11.0 Traffic Control Plan.

11.1 **General.** The CONTRACTOR must also submit to DOA Operations and to the ENGINEER for approval a comprehensive plan detailing how traffic will be maintained on all Work under this Contract. For vehicular and pedestrian traffic, CONTRACTOR must furnish, erect and maintain barricades, warning signs, lights and other traffic control devices in reasonable conformity with the Manual of Uniform Traffic Control Devices (MUTCD) for Streets and Highways (published by United States Government Printing Office).

12.0 Trench Excavation Plan.

12.1 **General.** Before excavating any trench five (5) feet or more in depth, CONTRACTOR must submit to ENGINEER and CITY's Safety Representatives a detailed plan showing the design of shoring, bracing,

sloping or other provisions to be made for the Employees' protection from the hazard of caving ground during the excavation of such trench. The Plan must be designed per OSHA standards.

13.0 Construction Requirements.

13.1 **Fall Protection Requirements.** These fall protection requirements are mandatory for all trades, involved in performing Work on the Project.

13.1.1 CONTRACTOR must apply and enforce 100% fall protection for all work performed six (6) feet or more above ground or finished floor level.

13.1.2 CONTRACTOR must take all practical measures to eliminate, prevent and control fall hazards. The Project must be surveyed prior to the commencement of any Work to identify all hazards of Personnel falling from elevations. First consideration must be given to the elimination of those hazards. If a fall hazard cannot be practically eliminated, second consideration must be given to implementing effective permanent means of fall protection.

13.1.3 All Employees who are working where fall hazards cannot be eliminated or falls prevented must be uniformly equipped, trained and given refresher training every twelve (12) months to minimize adverse effects of accidental falls.

13.1.4 All employees must utilize a full body harness with two (2) shock-absorbing lanyards to allow continuous protection.

13.1.5 Guardrail systems consisting of a top rail, mid-rail and toe plate must be installed on perimeter edges or scaffolding.

13.2 **Eye, Face and Head Protection Policy.** All personnel shall at all times wear American National Standard Institute approved safety glasses, hard hats and face shields (as needed) while working on the Jobsite.

13.3 **Lighting and other Hazard Markings**. CONTRACTOR must furnish, erect and maintain markings and associated lighting of open trenches, excavations, temporary stock piles and its parked construction Equipment that may be hazardous to the operation of emergency fire-rescue or maintenance vehicles on the Airport in reasonable conformance to FAA guidelines, including FAA Advisory Circular 150/5370-2D, Operational Safety on Airports during Construction. CONTRACTOR must identify each motorized vehicle or piece of

construction equipment in reason conformance to FAA Advisory Circular 150-5370-2D.

14.0 Safety Not Separately Priced. Costs for performing all Work necessary to provide safety measures must be incidental to the prices for other items of Work, and not priced separately.

15.0 Enhanced Project Safety Rules. The project safety rules attached as Appendix 2 to this Exhibit will be briefed to all personnel and posted on the project site. These rules are intended to enhance OSHA requirements and to establish policy for projects on or procured by the City of Atlanta for the Hartsfield-Jackson Atlanta International Airport (HJAIA).

Appendix 1 to Exhibit D

Components of a CONTRACTOR Health and Safety Plan

Section 1 – This section should include a safety commitment letter signed by the President of your company. The following items must be addressed by this letter:

a. Company commitment to being incident and injury free, and your company's philosophy on safety.

b. Company acknowledgement that they will support and participate in a light duty/return to work policy.

c. Company acknowledgement that they will commit to drug free workplace.

d. Company acknowledgement that they will comply with OSHA Standards 29 CFR 1926, 29 CFR 1910 and 46 CFR (if applicable)

e. Project Safety Manager's name and lines of authority, his authority regarding safety matters.

f. The following attachments should follow the commitment letter:
   1. Project Safety Manager and additional Safety Manager's resumes (must meet specification qualifications).
   2. Contact List for Supervisory Staff:
      i. Name
      ii. Job Title
      iii. Office Telephone Number
      iv. Cellular Telephone Number
      v. E-mail address
   3. List of Subcontractors:
      i. Name of Subcontractor
      ii. Address
      iii. Contact Person
      iv. Office Telephone Number
      v. Cellular Telephone Number
      vi. E-mail address

Section 2 – This section should include your company disciplinary policy which incorporates Section 6 of Appendix 2, Safety Rules for All Projects.

Section 3 – This section should include your company drug policy which incorporates Section 2 of Appendix 2, Safety Rules for All Projects.

Section 4 – This section should include the site specific job hazard analysis for your project. It should take the tasks in your project schedule, analyze the hazards and list the proposed safety measures to abate those hazards.

Section 5 – This section should include your health and safety program administration.

a. How you intend to conduct the on-site, day-to-day operations of your program and roles / responsibilities of those in your organization in compliance with state, federal and local jurisdictions, commitment to safety education and training.

b. How you handle new hire training, employee responsibilities, first aid, CPR, Return to Work Program, etc.

c. Include in this section how you will address the items included in 29 CFR 1926 Subpart C General Safety and Health Provisions.

Section 6 – This section should be broken up into safety categories. At a minimum, it shall include sections on the following:

a. Safe Work Practices
b. Housekeeping
c. Personal Protective Equipment
d. Respiratory Protection
e. Hearing Protection
f. Fall Protection
g. Fire Prevention
h. Ladder, Stairway and Ramp Safety
i. Scaffolding
j. Electrical Safety
k. Lockout / Tag out Procedures
l. Tool safety
m. Personal Hoists / Man-lifts
n. Welding and Cutting
o. Compressed Gas Cylinders
p. Excavation and Trenching
q. Mobile Equipment Operation and Operator Training
r. Trucking
s. Steel Erection
t. Cranes & Rigging
u. Hazardous Material Handling
v. Hazard Communication Compliance
w. Confined Space Entry Program
x. Concrete and Masonry Construction
y. Demolition
z. Explosives

aa. Work Zone Safety – MUTCD
bb. Site Security
cc. Miscellaneous – (Include any applicable items not covered above needed to successfully complete your contract.

Note: Not all items in Section 6 may be used in the course of your construction. If an item is not relevant, you may leave it out of your plan, but indicate under that item that it is not needed for your project. There may also be items not included above that are relevant, but which are not included above. Those items must still be addressed in your plan.

A failure to include items in your safety plan which may be needed later will not relieve you of the responsibility to comply with all government standards that would apply and we reserve the right to require a supplemental safety submission to address that specific issue.

Appendix 2 to Exhibit D

Safety Rules for All Projects

1. **Drug and Alcohol Testing.**

   a. Use and/or possession of intoxicants, alcohol or drugs, are strictly prohibited. Use and/or possession will result in immediate termination and removal from the project.

   b. Drug testing shall be a regular part of your program and include the following types of testing:

      i. Post Accident – a worker who has an accident will be drug tested at the hospital or clinic. This applies to property and personnel incidents.
      ii. For Cause – workers who exhibit behavior of a nature consistent with possible drug use will be subjected to immediate drug testing. Failure to comply with a request for testing will result in immediate removal from the project.
      iii. Random – random testing will be done at the company level.
      The cost of all drug testing will be borne by the CONTRACTOR.

2. **Personal Protective Equipment (PPE).**

   a. All contractor personnel, DOA personnel and owner representatives, City of Atlanta Personnel, Vendors, Suppliers, and all visitors to the jobsite will dress as follows:

      i. Hardhats / construction helmets– must be worn 100% of the time while workers are on the project. The bill will face the front. No caps of any kind will be worn under hardhats. Hard hats must meet the applicable ANSI standards.
      ii. Safety glasses will be worn 100% of the time while workers are on the project. Safety glasses must meet the applicable ANSI standards.
      iii. Shirts with sleeves (minimum 4") – no cut offs or tank tops are allowed.
      iv. Long pants extending to the boot
      v. Work boots
      vi. Reflective vests
      vii. Hearing protection in accordance with OSHA standards
      viii. Work gloves (as required by contractor internal policies)

   b. The following items of clothing or manner of dress are not considered

appropriate attire and will not be allowed:

i. Cut-off shirts (sleeves or midriff)
ii. Workers without shirts
iii. Tennis shoes or hiking boots
iv. Glasses that are not safety glass (meet ANSI Z87 standard)
v. Jewelry – rings, earrings, body piercing, necklaces, etc. will not be worn around or near moving parts or tools.

3. **Housekeeping.** Housekeeping shall be done on a daily basis or as needed to ensure a safe working environment. Dumpsters shall be provided on each project for the removal of construction debris. Construction debris shall be removed to dumpsters daily or more often as needed. Work areas shall be cleaned as needed to provide for worker safety. Trash receptacles shall be provided on site for the disposal of cans, garbage and trash. These receptacles shall be clearly marked "Trash" and shall be emptied as needed to comply with sanitary requirements.

4. **Restrictions.**

   a. No glass containers are allowed on the job site. Workers may use aluminum cans or plastic bottles and these must be disposed of properly.

   b. When working on the Aircraft Operations Area (AOA), workers are to place all uneaten food; food wrappers, bottles and cans back in their lunch box and remove them. No debris (Foreign Object Debris (FOD) is to be left on the AOA.

   c. No use of music devices are allowed on the jobsite, including, but not limited to radios, cellular phones, cassette players, CD player, or IPODs.

   d. No yellow caution tape, red danger tape or survey tape is to be used on projects inside the Aircraft Operations Area (AOA).

5. **Imminent Danger to Life and Health situations (IDLH).** Anyone (e.g., visitors, consultants, excluded contractors, etc) who observes, has knowledge of, or is observed acting in a manner, which expose them or a coworker to serious injury or death will be disciplined as follows unless the act is so egregious that it requires immediate termination:

   a. First occurrence – Seventy-Two (72) hour suspension from Project. This suspension period will exclude weekends and all holidays. Within two (2) hours of the suspension, CONTRACTOR must provide CITY's Program Safety Manager with documentation of who has been suspended and when they are allowed back on the Project. Included in the documentation will be the date and type of re-training that will occur before the suspended individual is allowed to return to

work. The badge can be returned to the individual upon completion of re-training requirements.

b. Second occurrence – Removal from Project

c. Incidents that would result in a violation of this policy include, but not limited to the following:
   1) Fall protection issues (not being properly anchored)
   2) Excavation issues (no trench box or sides of the excavation not properly sloped)
   3) Electrical safety - failure to use proper lockout / tag out procedures
   4) Welding or cutting without proper eye protection
   5) Ladder safety – dangerous practices
   6) Riding in the back of a pick-up truck
   7) Confined Space Entry Safety (monitor, permit, training, etc.)
   8) Riding in or driving a truck or operating heavy equipment without using a seatbelt. The driver will be held responsible for compliance of the seatbelt policy by all passengers.

6. **Temporary Power.** All temporary power shall be on ground fault circuits at all times. If outlets are not ground fault circuit interrupter (GFCI) protected, a (GFCI) pigtail shall be used between the tool and the power source. All GFCI circuits should be tested before being used. They are mechanical devices, which can fail.

7. **Cranes.** The following additional requirements to OSHA will be followed when operating a crane on any project:

   a. Signalmen will stand where they may be clearly seen by the operator. They must be properly trained and have no other duties while they are signaling the crane operator.

   b. FAA Form 7460 must be filed and approved before crane use on Airport property.

8. **Ladders.** Fiberglass ladders only are acceptable for use on the project.

9. **Loitering.** There will be no loitering in the parking lots once the workday is completed. All employees should leave the job site in a reasonable period of time after the completion of their shift.

10. **Hot Work.** The following procedures will be followed for all hot work: cutting, grinding or welding:

    a. Flash arrestors shall be installed at the regulator on all cutting torches. An

additional flash arrestor shall be installed on the manifold if used.

b. Flash shields or blinds shall be used to prevent exposure of workers in the vicinity any welding operation. All efforts shall be made to prevent exposure of workers to ultraviolet rays and radiation energy.

c. Fire extinguishers of the proper size and type shall be provided in all areas where hot work such as cutting, welding, grinding, etc. is taking place. The minimum size and type of fire extinguisher that is acceptable is a 5lb. ABC fire extinguisher. Fire extinguisher inspection tags must be in place on the unit and inspections must be current (within the last 6 months).

d. "Hot Work Permits" must be obtained from the Atlanta Fire Inspector prior to the use of any open flame cutting, welding, etc. A copy of the permit must be on site at all times during any "Hot Work" activity.

11. **Protection.** See section 6 of this document.

12. **Respect.** Airport passengers and airline employees will be treated with the utmost respect and courtesy. Anything less may result in removal from the project site.

13. **Harassment.** Harassment of any kind (e.g., sexual, personal, property, etc.) will not be tolerated in any area controlled by the HJAIA. Proof of harassment will be grounds for removal from the project and possible action by the CONTRACTOR.

14. **Work Place Violence.** All acts of work place violence will be reported to your supervisor, who shall report in accordance with the project's incident reporting protocol. This protocol document will be provided upon enrollment in the OCIP.

15. **Accidents or Incidents.** All accidents, incidents, near misses, unsafe acts or unsafe conditions must be immediately reported to your supervisor, who must immediately report the occurrence in accordance with the Project's incident reporting protocol and followed up with a written report within twenty-four (24) hours of the occurrence.

    a. First Aid – All accidents which occur from operations or work performed at the airport must be referred to the listed panel of physicians, except in case of extreme emergency.

    b. Emergency Telephone Numbers – A list of emergency telephone numbers, to include doctor, ambulance, police and fire numbers shall be posted at all telephones on the project.

END OF DOCUMENT

EXHIBIT E

PRICING FORMS

CITY OF ATLANTA
DEPARTMENT OF AVIATION
HARTSFIELD-JACKSON ATLANTA INTERNATIONAL AIRPORT

PROJECT NUMBER FC-8071

EDS RECAPITALIZATION AND OPTIMIZATION – NORTH DOMESTIC TERMINAL

EXHIBIT E – PRICING FORM

BASE SCOPE **PROVIDE THE DESIGN AND CONSTRUCTION OF DOMESTIC NORTH TERMINAL CBIS EDS**						
ITEM NO.	PRELIMINARY CONSTRUCTION QUANTITY	ITEM WITH UNIT OR LUMP SUM PRICE WRITTEN IN WORDS	UNIT PRICE IN FIGURES		AMOUNT	
			DOLLARS	CENTS	DOLLARS	CENTS
SP-1	LUMP SUM	L.S., MOBILIZATION, AT _____ _____ PER LUMP SUM				
SP-2	ALLOWANCE	AS REQUIRED, PROJECT CONTINGENCY, AT THREE MILLION DOLLARS AND ZERO CENTS PER ALLOWANCE			**$3,000,000**	**00**
SP-3	ALLOWANCE	AS REQUIRED, SPARE PARTS, AT ONE MILLION DOLLARS AND ZERO CENTS PER ALLOWANCE			**$1,000,000**	**00**

BASE SCOPE

PROVIDE THE DESIGN AND CONSTRUCTION OF DOMESTIC NORTH TERMINAL CBIS EDS

ITEM NO.	PRELIMINARY CONSTRUCTION QUANTITY	ITEM WITH UNIT OR LUMP SUM PRICE WRITTEN IN WORDS	UNIT PRICE IN FIGURES		AMOUNT	
			DOLLARS	CENTS	DOLLARS	CENTS
SP-4	ALLOWANCE	AS REQUIRED, WORK ON DOA STIPULATED SINGLE VENDOR SYSTEM, AT SEVENTY THOUSAND DOLLARS AND ZERO CENTS PER ALLOWANCE			$ 70,000	00
SP-5	LUMP SUM	L.S., DESIGN – NORTH TERMINAL CBIS, AT _____ _____ PER LUMP SUM				
SP-6	LUMP SUM	L.S., CONTROLS AND PROGRAMMING INCLUSIVE OF DESIGN, INSTALLATION AND IMPLEMENTATION, AT _____ _____ PER LUMP SUM				
SP-7	LUMP SUM	L.S., CONSTRUCTION – NORTH TERMINAL CBIS, AT _____ _____ PER LUMP SUM				

BASE SCOPE PROVIDE THE DESIGN AND CONSTRUCTION OF DOMESTIC NORTH TERMINAL CBIS EDS						
ITEM NO.	PRELIMINARY CONSTRUCTION QUANTITY	ITEM WITH UNIT OR LUMP SUM PRICE WRITTEN IN WORDS	UNIT PRICE IN FIGURES		AMOUNT	
			DOLLARS	CENTS	DOLLARS	CENTS
		TOTAL BASE BID _____ _____ _____				

ADDITIVE ALTERNATE #1 CONTRACTOR'S COST FOR PROVIDING INSURANCE FOR THE BASE SCOPE OF WORK						
ITEM NO.	PRELIMINARY CONSTRUCTION QUANTITY	ITEM WITH UNIT OR LUMP SUM PRICE WRITTEN IN WORDS	UNIT PRICE IN FIGURES		AMOUNT	
			DOLLARS	CENTS	DOLLARS	CENTS
	LUMP SUM	L.S., CONTRACTOR'S COST FOR PROVIDING INSURANCE FOR THE BASE SCOPE OF WORK IN ACCORDANCE WITH EXHIBIT D, AT _____ _____ _____ PER LUMP SUM				

ADDITIVE ALTERNATE #2

PROVIDE THE DESIGN AND CONSTRUCTION OF AN ADDITIONAL NON-CLEAR CONVEYOR LINE IN THE NORTH TERMINAL CBIS

ITEM NO.	PRELIMINARY CONSTRUCTION QUANTITY	ITEM WITH UNIT OR LUMP SUM PRICE WRITTEN IN WORDS	UNIT PRICE IN FIGURES		AMOUNT	
			DOLLARS	CENTS	DOLLARS	CENTS
SP-8	LUMP SUM	L.S., PROVIDE THE DESIGN AND CONSTRUCTION OF AN ADDITIONAL NON-CLEAR CONVEYOR LINE IN THE NORTH TERMINAL CBIS, PER DRAWING #B6-N-101, AT _____ _____ _____ PER LUMP SUM				
	LUMP SUM	L.S., CONTRACTOR'S COST FOR PROVIDING INSURANCE FOR ADDITIVE ALTERNATE #2 IN ACCORDANCE WITH EXHIBIT D, AT _____ _____ _____ PER LUMP SUM				

ADDITIVE ALTERNATE #3

UPS SYSTEMS FOR DOMESTIC NORTH TERMINAL

ITEM NO.	PRELIMINARY CONSTRUCTION QUANTITY	ITEM WITH UNIT OR LUMP SUM PRICE WRITTEN IN WORDS	UNIT PRICE IN FIGURES		AMOUNT	
			DOLLARS	CENTS	DOLLARS	CENTS
SP-9	LUMP SUM	L.S., PROVIDE THE DESIGN AND INSTALLATION OF ONE UNINTERRUPTED POWER SUPPLY (UPS) FOR EACH OF 6 EDS MACHINES IN THE DOMESTIC NORTH TERMINAL CBIS. UPS UNITS PROVIDED BY OTHERS, AT _____ _____ _____ PER LUMP SUM				
	LUMP SUM	L.S., CONTRACTOR'S COST FOR PROVIDING INSURANCE FOR ADDITIVE ALTERNATE #3 IN ACCORDANCE WITH EXHIBIT D, AT _____ _____ _____ PER LUMP SUM				

SECTION SP-1 MOBILIZATION

01) DESCRIPTION

a) This item shall consist of preparatory work and operations, including, but not limited to, those necessary for the movement of personnel, equipment, supplies, and incidentals to the project site; and for all other work and operations which must be performed or costs incurred prior to beginning work on the various items on the project site for upgrades to the Checked Baggage Inspection Systems (CBIS) located in the Domestic North Terminal.

b) The Contractor will be provided a staging area and material stockpile area; its limits shall be as agreed to by the City. The staging area shall be configured to have public access. This item is also intended to compensate the Contractor for all costs for providing all temporary fencing and gates required at access routes to the Contractor staging/storage area and the removal of the same at the completion of the project, and to provide final clean-up and restoration of the Contractor staging/storage area. All required utilities for the Contractor's staging area shall be arranged and promptly paid for by the Contractor directly with the appropriate utility agency. Utility arrangements are subject to the City's approval. No separate payment shall be made for any item required for the Contractor to enclose and set up his operational areas. Contractor shall restore the site to its original condition, to the satisfaction of the City upon completion of the contract work; grassing is required as a part of the restoration. No separate payment shall be made for any restoration work.

02) BASIS OF PAYMENT

a) The amount bid for Mobilization should not exceed five percent (5%) of the total amount bid for the Contract, less allowances. If circumstances warrant an amount greater that five percent (5%), the amount in excess of five percent (5%) will be paid on the final invoice.

b) Partial payments will be made as follows:

Milestone	Cumulative Percent of the Price to be paid
Submittal of Safety Plan	10%
Submittal of Security Plan	10%
First Month after Construction Start	25%
Second Month after Construction Start	25%
Third Month after Construction Start	25%

The final five percent (5%) of the amount bid for Mobilization shall be paid after demobilization and final cleanup of the Contractor staging/storage area and the entire jobsite.

c) Payment will be made under:

Item SP-1-1- Mobilization - Per Lump Sum.

END OF SECTION SP-1

SECTION SP-2 PROJECT CONTINGENCY

01) DESCRIPTION

a) This section shall consist of work to be accomplished at the discretion and direction of the Owner per SC-14, Project Contingency/Allowances. As such, the Contractor is not to plan to commit or commit any funds associated with this Allowance without prior written approval by the Owner. It shall include items of work consistent with and related to the project which are not shown on the plans but which may be necessary for the successful completion of the contract for upgrades to the Checked Baggage Inspection Systems (CBIS) located in Domestic Terminal North. It is expected that work under this section will be accomplished utilizing construction items established under the other sections of these specifications.

02) GENERAL PROCEDURES

a) All work performed under this section shall comply with the various other sections of these specifications and Contract which are appropriate for each specific item of work. Additionally, the work shall be further described by the Engineer in written form and /or on modifications to the contract drawings or on supplemental drawings. In any event, no work or expenses will be allowed under this section without the prior written approval of the Engineer.

03) MEASUREMENT AND PAYMENT

a) Measurement for work accomplished under this section shall be in accordance with the various other sections of the contract and specifications corresponding to the specific items of work involved. Method of payment shall be per the Contract.

04) BASIS OF PAYMENT

a) Payment will be made under:

Item SP-2-1 – Project Contingency– Per Allowance

END OF SECTION SP-2

SECTION SP-3 SPARE PARTS

01) DESCRIPTION

a) This section shall consist of work to be accomplished at the discretion and direction of the Owner per SC-14, Project Contingency/Allowances. As such, the Contractor is not to plan to commit or commit any funds associated with this Allowance without prior written approval by the Owner. It shall include the supplying of spare parts for the Domestic Terminal North CBIS. It is expected that work under this section will be accomplished utilizing construction items established under the other sections of these specifications.

02) GENERAL PROCEDURES

a) All work performed under this section shall comply with the various other sections of these specifications and Contract which are appropriate for each specific item of work. Additionally, the work shall be further described by the Engineer in written form and /or on modifications to the contract drawings or on supplemental drawings. In any event, no work or expenses will be allowed under this section without the prior written approval of the Engineer.

03) MEASUREMENT AND PAYMENT

a) Measurement for work accomplished under this section shall be in accordance with the various other sections of the contract and specifications corresponding to the specific items of work involved. Method of payment shall be per the Contract.

04) BASIS OF PAYMENT

a) Payment will be made under:

Item SP-3-1 – Spare Parts – Per Allowance

END OF SECTION SP-3

SECTION SP-4 DOA STIPULATED SINGLE VENDOR SYSTEMS

01) DESCRIPTION

a) This section shall consist of work to be accomplished at the discretion and direction of the Owner per SC-14, Project Contingency/Allowances. As such, the Contractor is not to plan to commit or commit any funds associated with this Allowance without prior written approval by the Owner. It shall include the payment for work performed by DOA Stipulated Single Vendor System services at the Checked Baggage Inspection Systems (CBIS) located in the Domestic North Terminal. It is expected that work under this section will be accomplished utilizing construction items established under the other sections of these specifications.

02) GENERAL PROCEDURES

a) All work performed under this section shall comply with the various other sections of these specifications and Contract which are appropriate for each specific item of work. Additionally, the work shall be further described by the Engineer in written form and /or on modifications to the contract drawings or on supplemental drawings. In any event, no work or expenses will be allowed under this section without the prior written approval of the Engineer.

03) MEASUREMENT AND PAYMENT

a) Measurement for work accomplished under this section shall be in accordance with the various other sections of the contract and specifications corresponding to the specific items of work involved. Method of payment shall be per the Contract.

04) BASIS OF PAYMENT

a) Payment will be made under:

Item SP-4-1 – DOA Stipulated Single Vendor Systems – Per Allowance

END OF SECTION SP-4

SECTION SP-5 DESIGN - NORTH TERMINAL

01) DESCRIPTION

a) Work under this section consists of all project design except for the design that is included in SP-6 (Controls and Programming). This work shall comply with the appropriate sections of the Contract Documents.

02) GENERAL PROCEDURES

a) All work performed under this section shall comply with the various other sections of these specifications and Contract which are appropriate for each specific item of work.

03) MEASUREMENT AND PAYMENT

a) Measurement for work accomplished under this section shall be in accordance with the various other sections of the contract and specifications corresponding to the specific items of work involved. Measurement for payment shall be per SC-11 and other provisions of the Contract.

04) BASIS OF PAYMENT

a) Partial Payments will be made as follows:

Milestone	Cumulative Percent of the Price to be paid
70% TSA Design Deliverables Submitted & DOA Design Development Phase (70%) Submitted	40%
70% TSA Design Deliverables Approved & DOA Design Development Phase (70%) Approved	45%
100% TSA Design Deliverables Submitted & DOA Construction Document Phase (95%) Submitted	80%
100% TSA Design Deliverables Approved & DOA Construction Document Phase (95%) Approved	85%
Final TSA Project Construction Drawings and Specifications Approved & DOA Construction Document Phase (100%) Corrected Final Approved	90%

TSA Project Record Drawings/CAD As-Built Submittal Approved & DOA As-Built Drawings and Specifications Approved	100%

b) The Schedule of Values required by SC-11 shall incorporate the partial payments as shown above in a).

c) Payment will be made under:

Item SP-5-1 – Design – North Terminal – Per Lump Sum

END OF SECTION SP-5

SECTION SP-6 CONTROLS AND PROGRAMMING

01) DESCRIPTION

a) Work under this section consists of all design, installation and implementation of the all project controls and programming. This work shall comply with the appropriate sections of the Contract Documents.

02) GENERAL PROCEDURES

a) All work performed under this section shall comply with the various other sections of these specifications and Contract which are appropriate for each specific item of work.

03) MEASUREMENT AND PAYMENT

a) Measurement for work accomplished under this section shall be in accordance with the various other sections of the contract and specifications corresponding to the specific items of work involved. Method of payment shall be per SC-11 and other provisions of the Contract.

04) BASIS OF PAYMENT

a) Payment will be made in a monthly cycle based upon the earned value of the work completed for this item for the respective month.

b) The Schedule of Values required by SC-11 shall incorporate payment for this Item.

c) Payment will be made under:

Item SP-6-1 – Controls and Programming – Per Lump Sum

END OF SECTION SP-6

SECTION SP-7 CONSTRUCTION – NORTH TERMINAL

01) DESCRIPTION

a) Work under this section consists of all project construction except for the construction that is included in SP-6 (Controls and Programming). This work shall comply with the appropriate sections of the Contract Documents.

02) GENERAL PROCEDURES

a) All work performed under this section shall comply with the various other sections of these specifications and Contract which are appropriate for each specific item of work.

03) MEASUREMENT AND PAYMENT

a) Measurement for work accomplished under this section shall be in accordance with the various other sections of the contract and specifications corresponding to the specific items of work involved. Measurement for payment shall be per SC-11 and other provisions of the Contract.

04) BASIS OF PAYMENT

a) Payment will be made in a monthly cycle based upon the earned value of the work completed for this item for the respective month.

b) The Schedule of Values required by SC-11 shall incorporate payment for this Item.

c) Payment will be made under:

Item SP-7-1 – Construction – North Terminal – Per Lump Sum

END OF SECTION SP-7

SECTION SP-8 NON-CLEAR CONVEYOR LINE

01) DESCRIPTION

a) Work under this section consists of all design and construction of a new non-clear conveyor line in the North Terminal CBIS. This work shall comply with the appropriate sections of the Contract Documents.

02) GENERAL PROCEDURES

a) All work performed under this section shall comply with the various other sections of these specifications and Contract which are appropriate for each specific item of work.

03) MEASUREMENT AND PAYMENT

a) Measurement for work accomplished under this section shall be in accordance with the various other sections of the contract and specifications corresponding to the specific items of work involved. Measurement for payment shall be per SC-11 and other provisions of the Contract.

04) BASIS OF PAYMENT

a) Payment will be made in a monthly cycle based upon the earned value of the work completed for this item for the respective month.

b) The Schedule of Values required by SC-11 shall incorporate payment for this Item.

c) Payment will be made under:

Item SP-8-1 – Non-Clear Conveyor Line – Per Lump Sum

END OF SECTION SP-8

SECTION SP-9 UNINTERRUPTED POWER SUPPLY (UPS) DESIGN AND CONSTRUCTION

01) DESCRIPTION

a) Work under this section consists of all design and construction of six UPS units (one for each EDS machine) in the North Terminal CBIS. The UPS units will be provided by others. This work shall comply with the appropriate sections of the Contract Documents.

02) GENERAL PROCEDURES

a) All work performed under this section shall comply with the various other sections of these specifications and Contract which are appropriate for each specific item of work.

03) MEASUREMENT AND PAYMENT

a) Measurement for work accomplished under this section shall be in accordance with the various other sections of the contract and specifications corresponding to the specific items of work involved. Measurement for payment shall be per SC-11 and other provisions of the Contract.

04) BASIS OF PAYMENT

a) Payment will be made in a monthly cycle based upon the earned value of the work completed for this item for the respective month.

b) The Schedule of Values required by SC-11 shall incorporate payment for this Item.

c) Payment will be made under:

Item SP-9-1 – UPS Design and Construction – Per Lump Sum

END OF SECTION SP-9

EXHIBIT F

SCHEDULE REQUIREMENTS

EXHIBIT F - SCHEDULE REQUIREMENTS

1. General Requirements

1.1. The Work under this Contract shall be planned, scheduled, executed, reported and accomplished using the Precedence Diagramming Critical Path Method (hereinafter referred to as CPM), in calendar days, unless otherwise specifically provided in the Contract Documents.

1.2. Contractor shall have within its employ or under contract, throughout the execution of the Work under this contract, personnel with expertise in CPM scheduling and experience with the specified scheduling program so as to ensure its effective and efficient performance under this section.

1.3. The Project Schedule shall be computerized by the Contractor utilizing the latest version of Oracle Primavera P6, hereinafter referred to as Primavera. It is required that the Contractor shall have sufficient capabilities to perform this Work. Any and all costs incurred by the Contractor in researching and/or educating its personnel in CPM or Primavera are to be borne by the Contractor and will not be reimbursed by the CITY.

1.4. The primary objectives of the requirements of this section are: (a) to insure adequate planning and execution of the Work by Contractor; (b) to assist ENGINEER in evaluating progress of the Work; (c) to provide for optimum coordination by Contractor of its trades, Subcontractors, and Suppliers, and of its Work with the work or services provided by any separate CONTRACTORS; (d) to permit the timely prediction or detection of events or occurrences which may affect the timely prosecution of the Work; (e) to provide a mechanism or tool for use by the ENGINEER, and Contractor in determining and monitoring any actions of the Contractor which may be required in order to comply with the requirements of the Contract Documents relating to the completion of the various portions of the Work by the Contract Time specified in the Contract Documents.

1.5. Contractor is responsible for determining the sequence of activities, the time estimates for the detailed construction activities and the means, methods, techniques and procedures to be employed. The Project Schedule shall represent the Contractor's best judgment of how it will prosecute the Work in compliance with the Contract requirements. Contractor shall ensure that the Project Schedule is current and accurate and is properly and timely monitored, updated and revised as Project conditions may require and as required by the Contract Documents.

1.6. Contractor shall provide the basic data relating to activities, durations, Specified Contract milestones, and sequences to ENGINEER as part of Contractor's Draft Baseline Schedule and Final Baseline Schedule submittal, discussed later in this Exhibit. This data shall reflect the Contractor's actual plan for the Project and shall fully comply with all requirements of the Contract Documents and this Exhibit.

1.7. At the discretion of the ENGINEER, Contractor shall coordinate and interface with others performing work for the CITY in the same area and shall coordinate its activities with all parties including the Owner, Consultants, Suppliers and other CONTRACTORS (See Attachment 1).

1.8. Contractor shall include in the Project Schedule all interface points with others. These points shall be in the form of Start Milestones for deliverables due to the Contractor from others and as Finish Milestones for deliverables that Contractor must supply to others.

1.9. Should Contractor intend or plan to complete the Work, or any portion thereof, earlier than any applicable Specified Milestone Date or the Contract Time, Contractor shall give timely and reasonable Notice of this fact to ENGINEER. The CITY shall have the sole discretion to accept or reject such early completion plan by Contractor. Schedule improvement is always encouraged whenever possible. However, since interface with other parties performing work at Hartsfield-Jackson Atlanta International Airport (ATL) is necessary, the CITY and its representatives shall have no duty or obligation to agree to, or to cooperate with Contractor regarding any early completion plan or proposal by Contractor and shall not be liable for any damages of Contractor because of the rejection by the CITY of said plan.

2. Schedule Development, Submittal and Approval

2.1. Development of the Project Schedule is a multi-step process with each step requiring defined information and input of project team members. The development process includes the Schedule Orientation Session, Draft Schedule, and Final Schedule.

2.2. **Schedule Orientation Session**: Contractor shall, upon notification from the ENGINEER, attend a schedule orientation session relating to the Schedules and Reports requirements for this Project. The schedule orientation session is designed to review in detail the objectives of the Schedules and Reports requirements. Contractor shall arrange for its Project Manager, Superintendent, and Project Scheduler to attend the schedule orientation session. The following items will be discussed during the orientation session: (a) The procedures and requirements for the preparation of the Project Schedule; (b) how the requirements of the Contract Documents will be monitored and enforced by the ENGINEER (c) long-lead items and time requirements for the Work by Subcontractors will be identified and included in the schedule.

2.3. The Contractor shall provide the Project Schedule in a format that is acceptable to ENGINEER.

2.4. **Draft Baseline Schedule**: Within fifteen (15) calendar days of the schedule orientation session or NTP the Contractor shall complete and submit a draft of its Project Schedule (Draft Baseline Schedule).

2.5. The Draft Baseline Schedule shall represent the Contractor's best judgment and intended plan for completion of the Work in compliance with Contract Milestone Dates in the Contract Documents. The Contract Milestone Dates shall be included in the Draft Baseline Schedule as zero duration finish milestones. The Draft Baseline Schedule shall take into account all foreseeable activities to be accomplished by other interfacing Contractors, interface dates with utility owners, CITY's operations and others. (See Attachment 1)

2.6. The ENGINEER shall have the right to require the Contractor to modify any Contractor data or any portion of the Contractor's Draft Baseline Schedule to comply as required herein, with Contractor bearing the expense thereof, which the ENGINEER reasonably determines to be: (a) impracticable, (b) based upon erroneous calculations or estimates, (c) unreasonable, (d) required in order to ensure proper coordination by Contractor of the Work of its Subcontractors and with the work or services being provided by other interfacing CONTRACTORS, (e) necessary to avoid undue interference with the CITY's operations or those of any utility owners or adjoining property owners, (f) necessary to ensure completion of the Work by the Contract Milestone Dates set forth in the Contract Documents, (g) required in order for Contractor to comply with the requirements of Paragraph 1.8 hereof or any other requirements of the Contract Documents or this Exhibit, (h) not in accordance with the Contractor's actual operations, unless the revision or modification will change the original scope of Work.

2.7. Along with the Draft Baseline Schedule submittal, Contractor shall submit to the ENGINEER an Invoicing Schedule of Values for review and acceptance.

2.8. **Final Baseline Schedule:** No later than fourteen (14) calendar days after the Draft Baseline Schedule is returned with comments to the Contractor by the ENGINEER, the Contractor shall complete and submit the Final Baseline Schedule to the ENGINEER for acceptance.

2.9. Upon review of the Final Baseline Schedule by the ENGINEER, the Contractor will be notified in writing as to acceptance, reasons for rejection, or any revisions required.

2.10. The accepted Final Baseline Schedule will be "frozen" and shall become the **"Project Schedule"** for the Work and shall be used to monitor and record progress and evaluate revisions. This Final Baseline Schedule shall be established as the target schedule for the Contract and shall not be changed, altered or revised. A copy of the accepted Final Baseline Schedule shall be used to establish progress reporting in accordance with Section 4 of this Exhibit. The CITY will not recognize or accept any other schedule.

2.11. Contractor shall include, as part of the Final Baseline Schedule submittal to the ENGINEER, a narrative report indicating anticipated allocation by Contractor of the following resources and work shifts for each activity which it proposes to be utilized on the Project, (a) Labor resources, (b) Equipment resources, and (c) Whether it proposes the Work to be performed on single, double or triple shifts, and whether it is to be done on a 5, 6, or 7-day work week basis.

3. Schedule Content and Format

3.1. Except for non-construction activities such as, procurement, delivery, or submittal development, Contractor shall differentiate activities of the schedule so that no single activity shown has a duration longer than fifteen (15) calendar days unless the ENGINEER, in its sole discretion, shall approve a longer duration for certain activities.

3.2. The Draft Baseline Schedule and Final Baseline Schedule submittals shall consist of two (2) copies of the Primavera generated bar chart schedule, representing all activities which are part of the Contractor's plan on 11" x 17" paper, in color, and a Primavera generated backup XER file of the schedule on electronic media acceptable to the ENGINEER. The submittal shall also include the narrative report.

3.3. The Draft Baseline Schedule and Final Baseline Schedule submittals must contain or be able to demonstrate that the following items have been addressed: (a) Project name, WBS, Contract and Task Order numbers (if applicable); (b) Contractor name; (c) Revision or edition number; (d) activities of completed Work ready for use by next trade, CITY, etc.; (e) activities relating to different areas of responsibility such as subcontracted Work which is distinctly separated from that being done by the Contractor directly; (f) distinct and identifiable subdivisions of Work such as structural slabs, beams, columns; (g) locations of Work within the Project that necessitates different times or crews to perform; (h) outage schedules for existing utility services that will be interrupted during the performance of the Work; (i) acquisition and installation of equipment and materials supplied and/or installed by CITY or separate CONTRACTORS; (j) material to be stored on site; (k) Contract Milestone Dates, (l) procurement of long lead items and (m) QA & QC Activities.

3.4. For all major equipment and materials to be fabricated or supplied for the Project, the Final Baseline Schedule shall show a sequence of activities including, (a) preparation of shop drawings and sample submissions, (b) a minimum of ten (10) calendar days for the DOA's review of shop drawings and samples or such time as specified in the Contract Documents, (c) shop fabrication, delivery and storage; (d) erection; and, (e) testing of equipment and materials.

3.5. The Final Baseline Schedule shall include late completion dates for the Work that is no later than the required Contract Milestone Dates. The bar chart submittal shall be drawn based upon the early start dates of activities shown on the graphic.

3.6. Contractor shall identify the activities which constitute the controlling operations or critical path of the schedule. No more than 30 % of the activities shall be critical. Critical is defined as total float less than one (1) calendar day.

3.7. All activity durations shall be given in calendar days.

4. Updating of Project Schedule/Progress Reports

4.1. At least once a month, the Contractor shall arrange for its Project Manager and Superintendent to meet at the Project site with the ENGINEER to review Contractor's updated Project Schedule as prepared by Contractor. Said update shall show up-to-date and accurate progress data and shall be based upon Contractor's best judgment; and said update shall be prepared by Contractor in consultation with all principal Subcontractors and Suppliers. The Contractor shall also submit with the each update an electronic copy, XER file, of the updated Project Schedule along with one (1) copy of the schedule on 11" x 17" paper.

4.2. Contractor shall adjust the data date ("as of date") to reflect the current update period as required by the ENGINEER. The required monthly data date shall be the last Friday of every month. This shall also be consistent with the cutoff for the application for payment.

4.3. The updated Project Schedule shall show activity commencement and completion dates for each activity and remaining durations in calendar days.

4.4. **Monthly Progress Report:** Contractor shall submit with the Monthly Application for Payment a narrative report which shall include, but not be limited to, a description of problem areas, current and anticipated delaying factors and their impact, explanations of corrective actions planned or taken, any newly planned activities or changes in sequence and proposed logic for a Recovery Schedule, if required, as further described herein. The report shall also include the updated Project Schedule updated as of the last Friday of the month and a narrative describing actual Work accomplished during the reporting period.

4.5. **Application for Payment:** Contractor understands and agrees that the submission and acceptance of the monthly progress reports (including the updated Project Schedule) are an integral part and basic element of the Applications for Payment and must be submitted with the Application for Payment.

4.6. **Weekly Progress Report:** A rolling four-week detailed schedule showing, by day, one week of actual progress and a three-week look-ahead forecast showing all activities for that period. Variation from approved schedules and plans shall be noted and rationalized.

5. Schedule of Values and Cash Flow Plan

5.1. Within 10 calendar days of the Notice to Proceed, per SC-11 the Contractor shall develop and submit to the ENGINEER a Schedule of Values by task to serve as the itemization of the work to support their Application for Payment. The Schedule of Values is subject to the ENGINEER's review and acceptance. Once accepted by the ENGINEER, the Schedule of Values will serve as the basis of all progress pay applications. Monthly progress payments will be based upon the total of the separate actual earned values for the subject month for all tasks listed in the Schedule of Values.

5.2. Within 10 calendar days of the Notice to Proceed, the Contractor shall submit to the ENGINEER a project Cash Flow Plan in a spreadsheet format which shall present, on a monthly basis, the planned cash flow for each of the tasks listed in the Schedule of Values. The Plan shall present the monthly cash flow totals as well as the overall project totals. The Cash Flow Plan shall be consistent with the project schedule. The Cash Flow Plan shall be updated on a monthly basis to reflect any variances and shall be a required submittal with the monthly Application for Payment. Any Application for Payment that does not contain the updated Cash Flow Plan will not be considered for payment until a valid updated Cash Flow Plan has been submitted. The Monthly Progress Report shall include explanations for any deviations between the Cash Flow Plan and the actual cash flow.

6. Recovery Schedule

6.1. Should the updated Project Schedule at any time during Contractor's performance, show in the sole opinion of the ENGINEER, that the Contractor is fourteen (14) or more calendar days behind schedule for any Contract Milestone Date, or should Contractor be required to undertake actions under this Section 5, the Contractor shall prepare a Recovery Schedule at no additional cost to the CITY (unless the Owner is solely responsible for the event or occurrence which has caused the schedule slippage) explaining and displaying how Contractor intends to reschedule its Work in order to regain compliance with the Project Schedule during the immediate subsequent pay period.

6.2. If the Contractor believes that all of the lost time can be recovered within thirty (30) days, the Contractor will be permitted to prepare a Recovery Schedule as set forth below. However, if the Contractor believes it will take more than thirty (30) calendar days to recover all of the lost time, it shall prepare and submit a request for revision to the "Baseline Project Schedule" and comply with all of the requirements of a Schedule Revision as set forth in Section 7 of this Exhibit. If Liquidated Damages are applicable to this Contract/Task Order, a revision to the "Baseline Project Schedule" will not change the accrual or assessment of Liquidated Damages unless, in the sole opinion of the ENGINEER, a revision of the Liquidated Damages terms and conditions is warranted.

6.2.1. The Contractor shall prepare and submit to the Owner's Representative a one-month maximum duration Recovery Schedule incorporating the best available information from Subcontractors and others which will permit a return to the original accepted "Baseline Project Schedule" at the earliest possible time. The Contractor shall prepare a Recovery Schedule to same level of detail as the originally accepted "Baseline Project Schedule" for a maximum duration of one month. This Recovery Schedule shall be prepared in coordination with other separate Contractors on the Project and shall not alter Contractor Milestone Dates.

6.2.2. Within two (2) working days after submission of Recovery Schedule to the ENGINEER, the Contractor shall participate in a conference with the ENGINEER to review and evaluate the Recovery Schedule. Within two (2) working days of conference, the Contractor shall submit the revisions necessitated by the review for the ENGINEER's review and acceptance. The Contractor shall use the approved Recovery Schedule as its plan for returning to the original accepted "Baseline Project Schedule".

6.2.3. During the period of time that the Recovery Schedule is in force, the Contractor shall prepare and submit to the ENGINEER weekly updates and shall confer continuously with the ENGINEER to assess the effectiveness of the Recovery Schedule. As a result of this conference, the ENGINEER will direct the Contractor as follows:

6.2.3.1. If the ENGINEER determines the Contractor is still behind schedule, the ENGINEER will direct the Contractor as to a plan of action regarding the Recovery Schedule.

However, nothing herein shall limit in any way the rights and remedies of the CITY as provided elsewhere in the Contract Documents; or

6.2.3.2. If the ENGINEER determines the Contractor has successfully complied with provisions of the Recovery Schedule, the ENGINEER will direct the Contractor to return to the use of the approved Project Schedule.

7. Time Extensions

7.1. The Contractor is responsible for requesting time extensions for time impacts that, in the opinion of the Contractor, impact the critical path of the current schedule update. Written notices of time impacts shall be submitted to the ENGINEER by the Contractor within ten (10) calendar days of the occurrence of the event which caused the impact and in accord with the requirements of this Exhibit.

7.2. Where an event, for which the CITY is responsible, impacts the Contractual Substantial Completion date, the Contractor shall submit a written plan which explains how (e.g., increase crew size, overtime, etc.) the impact will be mitigated along with a revised schedule. The Contractor shall also include a detailed cost breakdown of the labor, equipment and material the Contractor would expend to mitigate the CITY caused time impact. The Contractor is responsible for preparing the mitigation plan.

7.3. Failure to request time or provide the required mitigation plan within the required ten (10) calendar days will result in Contractor waiving its right to a time extension and cost to mitigate the delay.

7.4. No time will be granted under this Contract for cumulative effect of changes.

7.5. The CITY will not be obligated to consider any time extension request unless requirements of this Exhibit are complied with.

7.6. Failure of the Contractor to perform in accordance with the current schedule update shall not be excused by submittal of time extension requests.

8. Schedule Revisions

8.1. Schedule Revisions, as defined herein, shall refer to modifications made to activities in the Accepted Baseline Project Schedule in any of the following items: (a) Activity Original Duration; (b) changes in logical connections between activities; (c) changes in imposed constraints; (e) changes to activity descriptions.

8.2. Should Contractor desire to or be otherwise required under the Contract Documents to make modifications or changes in its method of operation, its sequence of Work, or the durations of the activities in its Project Schedule, it shall do so in accordance with the requirements of this Exhibit H, Schedule Requirements, and the Contract Documents. Revisions to the initial accepted Project Schedule must be accepted in writing by the ENGINEER.

8.3. Contractor shall submit requests for revisions to the Project Schedule to the ENGINEER, together with written rationale for revisions and description of logic for rescheduling work and maintaining the Contract Milestone Dates listed in the Contract Documents. Proposed revisions acceptable to the ENGINEER will be incorporated into the next update of the Project Schedule.

8.4. Changes in activity description(s) may be done for clarification purpose only. If the proposed description change affects the Scope of Work covered by the activity, Contractor shall obtain approval of the ENGINEER before incorporating into schedule.

8.5. Contractor shall be solely responsible for expediting the delivery of all materials and equipment to be furnished by him so that the progress of construction shall be maintained according to the currently approved Project Schedule for the Work. Contractor shall notify the ENGINEER in writing, within ten (10) calendar days of the occurrence, whenever Contractor determines or anticipates that the delivery date of any material or equipment to be furnished by Contractor will be later than the delivery date indicated by the Project Schedule.

9. Float Time

9.1. Float or slack time, as calculated by Primavera using retained logic, associated with one chain of activities is defined as amount of time between earliest start date and latest start date or between earliest finish date and latest finish date for such activities, as calculated as part of the Project Schedule. Float or slack time shown on the Project Schedule is not for exclusive use or benefit of either the CITY or the Contractor and is available for use by either according to whichever first needs the use or benefit of the float to facilitate the effective use of available resources and to minimize the impact of Project problems, delays or Changes in the Work which may arise during performance. Contractor specifically agrees that float time may be used by the CITY in conjunction with their review activities or to resolve Project problems. Contractor agrees that there will be no basis for any modification of the Contract Milestone Dates or an extension of the Contract Time, or a claim for additional compensation as a result of any Project problem, Change Order or delay which only results in the loss of available positive float in the Project Schedule.

9.2. Float time shown on the Project Schedule shall not be used arbitrarily by Contractor in a manner which, in the opinion of the ENGINEER, unnecessarily delays separate Contractors from proceeding with their work in a way which is detrimental to the interests of the CITY. If Contractor refuses to perform Work which is available and necessary to be performed in order not to delay any separate Contractors, the CITY may, regardless of the float shown on the Project Schedule to be available for the path of activities which encompasses said Work, terminate the Contractor for default.

10. Default

10.1. Failure of the Contractor to comply with the requirements of this Exhibit shall constitute a default by Contractor of its obligations under this Contract sufficient for termination of Contractor.

ATTACHMENT 1

PROJECT SCHEDULING DATA SHEET

1. Project Milestones:

   a) Complete Domestic North Terminal CBIS design in 210 calendar days (or earlier) after NTP.
   b) Complete obtaining the Domestic North Terminal CBIS Building Permit in 240 calendar days (or earlier) after NTP.
   c) Contractor shall achieve Domestic North Terminal CBIS Substantial Completion on or before **490** calendar days after Notice to Proceed (NTP).
   d) Contractor shall provide O&M manuals, warranties, and As-Built drawings within **60** calendar days from the date of Substantial Completion.
   e) Contractor shall reach Final Completion for Domestic North Terminal CBIS on or before **90** calendar days after Substantial Completion.

2. Available Work Hours – See Exhibit C – Design-Build Contractor's Scope of Work, Section 11.2.

3. The following submittals are required and their acceptance by the City controls the start dates for certain portions of the construction work, and in some cases, all of the construction work:

SUBMITTAL ITEM	CALENDAR DAYS REQUIRED FOR CITY'S REVIEW	COMMENTS
Site Specific Safety Plan	14	Approval required before construction start
Site Specific Security Plan (SIDA)	70	Approval required before construction start
Fire Protection Plan	14	Approval required before construction start
Hazardous Communication Plan	14	Approval required before construction start
Personnel Resumes (Note 1)	14	Approval required before construction start
Draft Baseline Schedule	14	Approval required before start of Final Baseline Schedule
Final Baseline Schedule	14	Approval required before construction start
Work Plan	14	Approval required before construction start
QA/QC Plan	14	Approval required before construction start
SIDA Badges	30	Approval Req'd before individual starts work on site
Bid Escrow Documents	N/A	Ten (10) days after the City issues its Notice of Intent to Award the Contract

Note 1: Resumes required for Designer of Record's lead design staff members, Contractor's Representative, Contractor's Superintendent and Contractor's Safety Representative

4. The detailed project phasing concept shall be developed by the Contractor and submitted to the DOA for coordination and approval by the DOA and the TSA. The City supplied Ricondo/CAGE preliminary phasing plans may be utilized and/or incorporated as appropriate into this process.

5. Contractor is to allow time for commissioning services and acceptance testing as required by OTA HSTS04-13-H-CT1141.

6. Contractor is to allow appropriate time in the project schedule for the TSA contractor to remove the existing EDS machines and install the new EDS machines. If the design/build contractor's scheduling critical path is negatively impacted due to delays associated with the TSA contractor, the design/build contractor's schedule will be adjusted according to the terms of this contract.

7. Coordination with others: TSA, DOA Airside Operations, DOA Landside Operations, Airport Security, AATC, and the North Terminal Airlines. Lead responsibility for such coordination will be by the City.

EXHIBIT G

QUALITY CONTROL PLAN REQUIREMENTS

HARTSFIELD-JACKSON ATLANTA INTERNATIONAL AIRPORT

FC-8071; EDS CAPITALIZATION AND OPTIMIZATION – NORTH DOMESTIC TERMINAL

EXHIBIT "G", QUALITY CONTROL PLAN REQUIREMENTS

The CONTRACTOR is required to provide a Project Quality Control Plan specific to this project. This Plan is part of the Contract Documents. The CONTRACTOR must, at all times, comply with all aspects of the approved Plan as well as ensure that all employees and subcontractors comply with the provisions of the Plan. This Site specific Project Quality Control Plan must be developed in accordance with the guidelines in Appendix 1.

The Project Specific Quality Control Plan must be submitted in writing to the ENGINEER and approved prior to commencing Work on the Project.

Unless specifically noted otherwise, the CONTRACTOR is responsible for all costs associated with the implementation of the Project Quality Control Plan including third party testing services. The costs for performing all Work necessary to provide a quality product must be incidental to the prices for other items of Work and not priced separately.

QUALITY CONTROL PLAN APPROACH

The purpose of the Project Quality Control Plan is to ensure all project work and services are performed with the highest quality per the Contract documents, as well as to provide guidance and measures to ensure that all work is completed in the safest of manners. It is important that project authority and practices are clearly defined and that the practices and quality control methods are implemented consistently. It shall be the responsibility of the CONTRACTOR to provide well trained and competent personnel to perform the QC/QA functions as outlined in the Project Quality Control Plan.

The quality control plan is intended to identify project controls/authority, general procedures such as document/data control and activity-specific controls and verification procedures for all project quality functions. The quality control plan is to be implemented to ensure initial and remedial construction procedures are performed in compliance with the plans and specifications under the contract. The plan is to provide a means to maintain effective quality control at the project site as outlined in the Task Order. The quality control measures as presented in the CONTRACTOR's plan are to include quality control organization and staffing; methods of performing, documenting and enforcing quality control operations of both the CONTRACTOR and its subcontractors (including inspection and testing); inspections to be performed; and protocol describing corrective actions. The quality control plan is meant to be a "living document" and will be amended and updated in keeping with all current local laws and ordinances, individual task orders and other areas where quality is being tailored for consistency to the project requirements.

At their sole discretion, the Owner reserves the right to perform any verification testing or observe any testing being performed by the CONTRACTOR. Upon proper notice, the CONTRACTOR must assist the Owner in arranging and scheduling such events.

GENERAL PLAN REQUIREMENTS

1. The Quality Control Plan is to be developed to a level commensurate with the level of complexity of the project.

2. The Plan shall cover controls instituted to assure the quality of the Work and the documenting of quality activities, inspections and testing requirements, materials certification and testing submittals, procedural direction and specific technical instructions.

3. The Plan shall address such items as documentation, QC/QA staff, and proposed recovery methodology for non-compliance.

General Quality Control/Quality Assurance Requirements

4. All project Quality Control functions will be performed in accordance with the CONTRACTOR Project Quality Control Plan which shall conform to the provisions of the Contract Document.

5. The CONTRACTOR shall supervise the Work of its Subcontractors providing instructions to each when their Work does not conform to the requirements of the Contract Documents, and it shall ensure that corrections are made in a timely manner so as to not affect the efficient progress of the Work.

6. Any commissioning will be provided by the Owner. The Contractor shall coordinate, cooperate, and accommodate the Owner's Commissioning Agent's activities and provide all required documents requested by the Commissioning Agent.

7. The CONTRACTOR shall manage the Quality control for their scope of work per the drawings and specifications as identified in the contract documentation.

8. All required site third party inspections shall be scheduled with adequate notice to the ENGINEER and Construction Manager.

9. Should disagreement occur between the Contractor and the ENGINEER over acceptability of the Work and conformance with the requirements of the Contract Documents, the Owner shall be the final judge of such performance and acceptability.

10. The Project Quality Control Plan shall be updated as necessary during this Task Order to reflect any changes in the plan.

11. The Project Quality Control Plan shall provide for the issuance of a "stop work" order by the Contractor or Engineer at any time during the Work when significant adverse quality trends and/or deviations from the approved Quality Control Plan are found.

12. The CONTRACTOR shall accommodate and cooperate with any inspections and testing by the OWNER.

13. If applicable, the project schedule shall incorporate major quality functions and assign time as required.

Appendix 1 to Exhibit G

Components of a CONTRACTOR Project Specific Quality Control Plan

QUALITY CONTROL PLAN STRUCTURE

The quality control plan is to be organized with the following sections:

1. Introduction

2. Project Scope

3. Project Organization and Authority

   The roles and responsibilities of the key personnel of the project are to be identified and defined. The person(s) having overall management of the Project Quality Control Plan and their supporting staff are to be identified.

4. Project Quality Assurance and Quality Control

   This section includes quality assurance and quality controls implemented for the contract. As a minimum the following shall be identified and defined:

   a. Communications Plan to define the flow and distribution of correspondence
   b. Procurement Plan
   c. QC/QA Plan
   d. Submittals
      1. Specification number
      2. Item description
      3. Description of submittal
      4. Specification paragraph requiring submittal
      5. Scheduled date of submittal
   e. Material Verification
   f. Inspection Activities with schedule "hold points" clearly indicated (if required).
   g. Testing Plan
   h. Recovery Plan
   i. Non-Conformances Procedures

5. Documentation and Recordkeeping

   This section shall include the Specific quality control records that the CONTRACTOR will provide to the ENGINEER

   a. Daily Inspection Records
   b. Request for Information
   c. Test Reports
   d. Non-Compliance
   e. Corrective Action
   f. As Builts
   g. O&M Manuals
   h. Warranties
   i. Meeting Minutes

6. Review and Evaluation

EXHIBIT H

WORK PLAN

HARTSFIELD-JACKSON ATLANTA INTERNATIONAL AIRPORT

FC-8071; EDS RECAPITALIZATION AND OPTIMIZATION – NORTH DOMESTIC TERMINAL

EXHIBIT "H", WORK PLAN

Contractor shall prepare an overall Work Plan developed to a level of detail which is commensurate with the project's level of complexity. The Work Plan must present the Contractor's global means and methods for delivering the project scope of work for the contract price and within the approved schedule while also abiding by the Safety Plan, Diversity Plan, Security Plan, QA/QC Plan and Traffic Control Plan as well as all other requirements of the Contract and/or Task Order. The Work Plan does not necessarily need to reiterate the requirements of the aforementioned plans, however, it must express the interfacing and integration of these plans within the Work Plan. Additionally, the Work Plan must address such items as project organization, management of the project, project staffing, project administrative requirements, design, construction, project phasing, subcontracting strategy, work days/work hours, provisions for major construction equipment and procurement of materials and services with special emphasis on long lead items.

EXHIBIT I

AIRPORT SECURITY REQUIREMENTS

HARTSFIELD-JACKSON ATLANTA INTERNATIONAL AIRPORT

FC-8071; EDS RECAPITALIZATION AND OPTIMIZATION – NORTH DOMESTIC TERMINAL

EXHIBIT "I", AIRPORT SECURITY PLAN REQUIREMENTS (SIDA)

The CONTRACTOR is required to provide a Site Specific Security Plan. This Plan is part of the Contract Documents. The CONTRACTOR must, at all times, comply with all aspects of the approved Plan as well as ensure that all employees and subcontractors comply with the provisions of the Plan. This Plan is a "living document" and will be updated as needed. This Site specific security plan must be developed in accordance with the guidelines in Appendix 1 of this document.

The Site Specific Security Plan must be submitted in writing to the Engineer and approved prior to commencing Work at the Jobsite.

Costs for performing all Work necessary to provide a secure site must be incidental to the prices for other items of Work, and not priced separately.

1. **Airport Security Requirements**. The CONTRACTOR shall at all times conduct all operations under this Contract in a manner to avoid the risk of loss, theft, or damage by vandalism, sabotage or any other means to any equipment, materials, work or other property at the Jobsite. The CONTRACTOR shall continuously inspect all equipment, materials and work to discover and determine any conditions which might involve such risks and shall be solely responsible for discovery, determination and correction of any such conditions.

   The CONTRACTOR shall comply with the Transportation Security Administration (TSA) and the City's security requirements for the Airport. Contractor shall cooperate with the TSA and the City on all security matters and shall promptly comply with any Project security arrangements established by City. Such compliance with these security requirements shall not relieve the CONTRACTOR of its responsibility for maintaining proper security for the above-noted items, nor shall it be construed as limiting in any manner the CONTRACTOR's obligation with respect to all applicable state, federal and local laws and regulations and its duty to undertake reasonable action to establish and maintain secure conditions at the Jobsite.

2. **Preventing Unauthorized Access**. The Airport has been secured to prevent unauthorized access to the Air Operations Area (AOA), the secured area, the sterile area and other controlled areas of the Airport. The CONTRACTOR shall cooperate to the fullest extent with the TSA and DOA to maintain the integrity of the security system. The CONTRACTOR shall control its operations and the operations of its subcontractors and all suppliers so as to provide for the free and unobstructed movement of aircraft, aircraft operations personnel

and equipment in the AOA, the secured area, the sterile area and other controlled areas of the Airport as defined herein.

3. **Transportation Security Administration/Responsibility of the CONTRACTOR.** In order to comply with the TSA and DOA security requirements, the CONTRACTOR shall be responsible for informing itself as to current, ongoing, and changing requirements, and for remaining in compliance with those requirements throughout this Contract. The security requirements are as follows and from time to time may change as required by the TSA and/or DOA.

4. **Security Identification Display Area (SIDA)**. The Security Identification Display Area (SIDA) is defined in the Airport Security Program as any area that requires individuals to continuously display Airport issued or Airport approved identification badges. Personnel associated with construction contracts in the AOA secured area or sterile area of the Airport shall display SIDA badges at all times. The TSA and the DOA require all personnel to display SIDA badges in areas controlled for security purposes at all times.

   4.1 **FBI/CHRC Checks.** To obtain a SIDA badge, each individual must successfully undergo a Federal Bureau of Investigation (FBI) fingerprint based Criminal History Records Check (CHRC) which must reveal no convictions of disqualifying crimes within the last ten years as defined in Transportation Security Regulation, TSR Part 1542.209. Each individual must also attend a security awareness course conducted by the DOA Security Division. Each employee must present two forms of Identification prior to the badging process. At least one form of identification must have been issued by a government authority and at least one must contain a photograph. The CONTRACTOR shall be responsible for all fees associated with obtaining a SIDA badge, (i.e. badge and fingerprint fees as determined by DOA). The current cost for the CHRC is $60.00 per individual. The current cost for badge is $60.00 per individual. Costs for lost badges is $200.00. The CONTRACTOR shall contact the DOA Security office at (404) 530-6667 prior to sending individuals to the DOA Security office for badging. The CONTRACTOR/Escorting Requirements are specified in subsection below.

5 **Displaying Badges.** Employees and those of all subcontractors must display a DOA issued badge showing the CONTRACTOR's name and an employee number. All personnel shall be required to wear this badge at all times while within the secured areas of the Airport.

6 **Badging Records and Process.** The CONTRACTOR shall maintain an up-to-date record of all badge holders showing name, address, sex, height, weight, color of eyes and badge number. The CONTRACTOR will be required to furnish this information to the DOA upon request.

   6.1 The Badging process may begin upon the CONTRACTOR's receipt of a formal Notice to Proceed (NTP) from the City and may take up to fourteen (14) calendar days to complete. Access to secured areas shall be denied until such time as the CONTRACTOR has completed the badging process.

6.2 If applicable, an Administrative NTP may be presented to the DOA Security Division by the CONTRACTOR in order to initiate the badging process for the CONTRACTOR's employees.

6.3 The CONTRACTOR shall appoint one of its employees as an Authorizing Agent and submit his or her name, on the CONTRACTOR's letterhead, to the DOA Security Division. The submittal letter shall indicate the Project Name, Contract Number, Point of Contact, Telephone and Fax number, list of subcontractors including subcontractors' Authorizing Agent nature of the work to be performed by the CONTRACTOR, and each subcontractor, location and duration, time frame(s), and justification for vehicle access, if required. A copy of the CONTRACTOR's Insurance Certificate shall accompany the letter. Once badged, the CONTRACTOR's Authorizing Agent shall be responsible for the badging process of his/her company employees.

6.4 Each Subcontractor identified in the CONTRACTOR's letter shall appoint one of its employees as an Authorizing Agent and submit his or her name through the CONTRACTOR, to the DOA Security Division. A copy of the Subcontractor's Insurance certificate shall accompany the letter. Once badged, the Subcontractor's Authorizing Agent shall be responsible for the badging process of his/her company employees.

6.5 Processing time for badging, at the badging office after completion of the CHRC, will last approximately one (1) hour. Processing time for Authorizing Agents will last an additional hour for briefing by the DOA Security Division. Authorizing agent briefing sessions will be conducted only on Mondays, Wednesdays and Fridays at 11 a.m. in the DOA Security office.

6.6 Each person applying for badging shall complete and submit all forms required by the DOA Security Division. All required forms will be provided to the authorizing agent at the time of the briefing at the DOA Security office.

6.7 Each person applying for a badge shall also submit to fingerprinting upon the submittal of said forms. Fingerprints will be utilized for a ten (10) year Federal Bureau of Investigation (FBI) based criminal history records check for each individual employee.

6.8 Pursuant to TSR § 1542.209 certain Felony convictions within the most recent ten (10) year period, may cause disqualification. A list of disqualifying Felony convictions is available in the offices of the DOA Security Division and in the TSR Regulations.

6.9 The Authorizing Agent will be notified when the results of the fingerprint checks are completed. Upon notification and approval, the CONTRACTOR's and subcontractor's approved employees may return to the DOA Security Office, during posted hours, for photographing and badging. This process may take up to sixty (60) minutes.

6.10 Badges issued to the CONTRACTOR and subcontractor employees and agents shall expire upon the happening of one (1) of the following events, whichever occurs first:

6.10.1 Completion of Contract or subcontract, unless extended by the City;
6.10.2 Expiration of Insurance coverage, as indicated on the CONTRACTOR's Insurance certificate; or
6.10.3 Employee's driver's license expiration date;
6.10.4 Two (2) years from the issuance of the badge.

6.11 The CONTRACTOR and its subcontractor shall be responsible for making arrangements, ahead of time, to extend badges, when necessary. A letter, directed to the DOA Assistant General Manager, Facilities, and the DOA Security Manager, explaining the reason(s) for the badge extension on the CONTRACTOR's letterhead will be required. Extension requests must be approved in writing by the DOA prior to extension of the badges.

6.12 The CONTRACTOR's questions concerning Airport Security shall be directed to (404) 530-6667.

7 **Drivers.** All drivers operating vehicles within the AOA must obtain, in addition to the DOA Security badge, a DOA Ramp Certification. Ramp Certification will be evidenced by a "D" sticker placed on the face of the badge by the DOA Security department.

7.1 **Ramp Certification.** City will require Airport Driver Safety Training and Ramp Certification for all personnel required to operate a motor vehicle in the AOA. This can be obtained by completing an Airport Driver Safety Training Course administered by the Airport Operations Division. These drivers shall only operate vehicle on the approved NLVR's & Aprons, excluding the Aircraft Movement Area. Contractor shall contact Airport Operations, at (404)530-6620 during normal business hours to schedule the training session.

7.2 Except where noted, all vehicles operating within the AOA shall carry a minimum liability insurance coverage amount of TEN MILLION DOLLARS ($10,000,000.00).

7.3 The CONTRACTOR shall mark all vehicles and construction equipment, including those of subcontractors, in a manner as required by the Department of Aviation and consistent with Transportation Security Regulations (TSR).

7.4 All vehicles operating within the AOA must display permanent signage, legible and visible from a sight distance of five hundred (500) feet on both sides of the vehicle. MAGNETIC SIGNS ARE PROHIBITED FROM USE IN THE AOA.

8 **Protocols for the CONTRACTOR Escorting.** The CONTRACTOR must incorporate escorting protocol with Security Plan submitted for approval by the Security Manager. The Security Manager must approve any exceptions. The CONTRACTOR must attach a map of work area(s) and routes to access the work area(s) to project security plan submitted to the Aviation Security Division for approval. The CONTRACTOR may contact DOA Security Manager at (404) 530–6667 during normal operating hours. These requirements cover

security escorting of unbadged personnel through airport security gates. The requirements for escorting onto the Aircraft Movement Area (AMA) and for crossing-guards on the airfield are included in the Technical Specifications.

8.1 All escorted vehicles and personnel must remain under the direction of authorized escorting personnel at all times.

8.2 The CONTRACTOR and escorted personnel shall have no Terminal or Concourse access.

8.3 Escorting is limited to an Airport SIDA badged prime CONTRACTOR or an Airport SIDA badged escorting subcontractor approved by the Security and Operations Managers to perform escorting duties. The individuals involved in escorting shall perform no other services other than escorting while in service. No other subcontractors will be allowed to escort any vehicle(s).

8.4 Escorting person(s) must have a SIDA badge.

8.5 Designated badged prime CONTRACTOR employees approved or badged escorting subcontractor must escort prime CONTRACTOR employees and subcontractors' employees to all work sites. Once at the work site, badged employees, prime or subcontractors', may supervise unbadged employees, not to exceed five (5) employees per one (1) SIDA badged employee.

8.6 All personnel (badged or escorted) must have an employee photo ID displayed on the outermost garment, waist high or above. The employee badge must contain the employee's name, The CONTRACTOR's name and project number or name. All escorted personnel must remain under the control of person(s) with an Atlanta SIDA badge at all times while in the SIDA.

8.7 Maximum vehicular escort—one (1) prime CONTRACTOR vehicle or approved badged escorting subcontractor is permitted to escort two (2) subcontractor vehicles.

8.8 All vehicles requiring escort must access and egress the AOA through Pre-approved gates. Vehicles requiring escort shall not be permitted access or egress through any other entry or exit point within the AOA for any reason whatsoever.

8.9 All escorted vehicles must obtain a permit, valid for up to ten (10) hours, at Gate 59. The obtaining of a permit, however, shall not relieve a vehicle from the requirement of being escorted as set forth herein.

8.10 In the event an escorted vehicle requires a time limit extension, the vehicle, and its original operator, must return to Gate 59 to obtain a time limit extension to complete

work in the AOA secure or sterile area. Time limit extension shall not exceed an additional ten (10) hour period under any circumstances.

9 **Construction Contracts Within Sterile Area (Inside Terminal, Concourses)**

9.1 Highest level of Security required.

9.2 All employees of prime CONTRACTOR and subcontractor, must be badged to work in the sterile area.

9.3 If escorting of unbadged the CONTRACTORs and or subcontractors is required, an approved sponsor agency (DOA, AATC, IAC, HACM, HCM, etc.) must perform escort full time.

9.4 For any work requiring access to the sterile area (beyond the Passenger Screening Checkpoint area and on Concourses), a tool inventory must be conducted daily by the prime CONTRACTOR or designated representative. A copy of this inventory should be provided to the construction manager or project manager for verification. In general, tools will not be allowed to pass through the checkpoint area.

10 **Restricted AOA Access.** The CONTRACTOR shall allow passage into the AOA or secured area through its access point to persons, vehicles, and equipment displaying identification of the DOA or provide an escort for each person or vehicle not displaying proper identification. Escort vehicles must be insured as specified per Exhibit D, Insurance and Bonding Capacity. Escorted vehicles need not carry the aforementioned coverage but must carry the minimum amounts of insurance required by Georgia Law. However, Insurance coverage of escort vehicles must provide coverage as specified by Exhibit D for vehicles being escorted.

11 **Visual Aids**. In the event of the possibility of contact with the AOA or secured area, the CONTRACTOR shall establish a system of visual aids for marking and delineating the limits of required clearances adjacent to active runways, taxiways, and NAVAIDS during both day and night time work, subject to City's approval prior to the start of any work under this Contract. The approved system of marking and delineating shall be installed, maintained and protected at all times.

12 **Tools and Materials.** The CONTRACTOR shall create and maintain an inventory of all tools and materials utilized within the SIDA, terminal building, Federal Inspection Service (FIS), and AOA.

12.1 All tools and materials shall be stored and maintained in a secured manner to prevent unauthorized use, within pre-designated areas within the secured areas of the airport. Storage designations shall be obtained by the CONTRACTOR and/or subcontractor, prior to mobilization, by contacting the DOA Properties Division at (404) 209-2945. Change requests for storage designation may be approved only through the DOA Properties Division with notification and concurrence from the DOA Security Division.

Failure to comply with this requirement may result in the termination of the CONTRACTOR's or subcontractor's contract and disqualification from working on construction contracts within secured areas of the Airport.

12.2 All tools and materials must be secured to prevent unauthorized use at all times within the secured areas of the Airport and/or the AOA. Failure to comply with this requirement may result in the termination of the CONTRACTOR's or subcontractor's contract and disqualification from working on construction contracts within secured areas of the Airport.

12.3 Any and all job-specific or unusual tools and/or materials shall be presented to the security authority at point of entry gate when accessing and/or egressing the SIDA and/or AOA. Failure to comply with this requirement may result in the termination of the CONTRACTOR's or subcontractor's contract and disqualification from working on construction contracts within secured areas of the Airport.

12.4 All vehicles shall remain subject to search while within the secured areas of the Airport and/or the AOA at all times. Vehicles may also be searched prior to entry to the secured areas of the Airport. The possession of weapons and other prohibited items may result in criminal or civil charges in accordance with applicable laws.

13 **Terminal/Curbside.** A maximum of two (2) CONTRACTOR vehicles <u>or</u> two (2) subcontractor vehicles may be permitted in a work area at any given time, subject to the approval of the Atlanta Police Department, and the DOA Security. In the event one (1) CONTRACTOR vehicle is present, then no more than one (1) subcontractor vehicle may be present at the same time, and vice versa.

13.1 Debris removal may be allowed from curbside with special permission by the DOA Security Department.

13.2 When parked at curbside, at least one (1) badged employee must remain with the vehicle at all times. Vehicles must be removed as expeditiously as possible in all cases.

13.3 Areas surrounding vehicles accessing curbsides must be kept clean at all times.

13.4 For purposes of obtaining Terminal or Curbside access, the APD Airport Section shall be contacted by dialing (404) 530-6630 24 hours in advance of the desired access time.

14 **Staging Areas.** The CONTRACTOR's Construction staging area shall be identified on the plans.

15 **Federal Inspection Service Areas.** For any or all work conducted within Federal Inspection Service (FIS) areas, Contractor shall submit FIS Authorization requests to the **U.S. Customs Service (404) 765-2300.** The request shall detail the names of employees, description and

area of work, work schedule, and any other relevant information to the DOA Security Department.

15.1 The CONTRACTOR shall be responsible for obtaining the appropriate approvals and special SIDA badge FIS access decals from the appropriate Federal authorities. Special SIDA badge FIS access decals will not be required in if one (1) or more U.S. Customs Agent(s) are present at the work site at all times.

16 **Security Checkpoints.** The CONTRACTOR and subcontractors shall maintain awareness among all employees, and at all times, that all Security Checkpoints are now under Federal jurisdiction rather than privately contracted Security agents. In general, contractors will not be allowed to carry tools and construction materials through the passenger security screening points.

16.1 Questions regarding Federal Security Checkpoints shall be directed to (404) 763-7437 or (404) 530-2150.

Appendix 1 to Exhibit I

Components of a CONTRACTOR SIDA Site Specific Security Plan

General Notes

1. In general, the security plan needs to explain who, what, when, and how:

    a. Who is performing the work or requiring access.

    b. What work is being performed and what security requirements are being observed.

    c. When the work is scheduled to commence and when it is scheduled to end.

    d. How the CONTRACTOR plans to maintain compliance with the airport security program (to include site access, controlling tool inventory, identifying workers/employees, how escorting will be performed, etc.

2. The document is not considered Sensitive Security Information (SSI), however once a security plan is completed and populated with the necessary information, that plan is to be considered SSI and handled observing all SSI non-disclosure rules.

    a. The submitted security plan is to be handled as SSI until that designation has been removed by Airport Security or Transportation Security Administration (TSA) or airport security.

3. The Security Plan requires 45-60 calendar days for review by the ENGINEER, Airport Security, and TSA as required.

    Note: The review time could be a minimum of 20 days; however, for the purpose of the schedule the CONTRACTOR should anticipate the 60 day possibility.

4. The Security Plan must be approved prior to any construction work taking place. This is an Airport Security and federal regulation requirement with no exceptions.

5. If original dates submitted on the approved security plan change (time extension), an updated security plan will have to be submitted to the ENGINEER, Airport Security, and TSA (as appropriate for the project) for review and approval.

Plan Outline

1. Introduction

    a. Project Name
    b. Project WBS Number
    c. Contractor
    d. Contract Number
    e. Location of Work Site
    f. Project Duration (Start/End Dates)
    g. Purpose of Security Plan
    h. Scope of Project

2. Project Access Points
   How the CONTRACTOR will access the project worksite and how this access point will be protected (if required).

3. Haul Routes
   How the CONTRACTOR will bring the material and equipment to the site. The route will be as identified on the Plans

4. CONTRACTOR Staging Areas
   Speak to where the CONTRACTOR will stage the equipment for this project. The staging area will be as identified on the Plans or as directed by the ENGINEER and/or Construction Manager.

5. Gate Security

    a. If the CONTRACTOR is to use a construction gate (69 or 54) other than the normal gate 59, this needs to be mentioned in this section.
    b. Also mention if the regular guard staffing firm will be used to staff the respective gate.

6. Fencing/Barricades
   Identify if additional fencing will be needed, altered, removed, etc. for this project. Provide drawing, sketch, marked up document(s) showing the as-is condition and proposed alteration.

7. Vehicles
   Identification methods to be used to identify the CONTRACTOR vehicles.

8. Identification

    a. Explain how personnel on this project will be identified

b. Explain if the CONTRACTOR will need to secure ATL SIDA badges and how they will be obtained.
c. Explain if customs seals will be needed and how they will be obtained.

9. Escorting

a. Who is allowed to conduct escorts under this project
b. Primary escorting gate.
c. Specifically state that "no escorting will be allowed beyond 3 days. All those requiring escorting beyond 3 days will be required to apply for and obtain an ATL SIDA badge".
d. Pre-approval of escorting activity for each occurrence
e. Pre-approval of escorting personnel and/or companies by DOA Security.
f. Appropriate escorting ratio for vehicles (1:2)
g. Appropriate escorting ratio for personnel (1:5).
h. Specifically state that "contractors who have begun the badging process are no longer eligible for escorting".

10. Department of Aviation Procedures
Speak to any other specific DOA Security Rules that will be observed (can be pertinent/specific contract language or other).

11. Security Communication
Project Points of Contact – PM, CM, Safety Representative, Emergency, etc.

12. References
Any reference documents that should be referred to (typically a contract number or something to that affect).

EXHIBIT J

PERFORMANCE BOND

Exhibit J, PERFORMANCE BOND

KNOW ALL MEN BY THESE PRESENTS:

That _____ as principal ("Principal),
(Legal Name and Address)

and _____ as surety ("Surety"), are held and firmly bound unto the
(Legal Title and Address of Surety)

CITY OF ATLANTA as Obligee ("Owner"), in the amount of _____DOLLARS

($_____), to which payment Principal and Surety bind themselves, their heirs, executors,

administrators, successors and assigns, jointly and severally, firmly by these presents.

WHEREAS, the Principal has entered into an Agreement with the Owner bearing date of _____ and in the same monetary amount of this bond for:

FC-8071, EDS Capitalization and Optimization – North Domestic Terminal_____ in accordance

with drawings and specifications prepared by: _____which said
(Full Name and Title)

Contract are incorporated herein by reference and made a part hereof, and is hereinafter referred

to as the Contract.

NOW THEREFORE, THE CONDITION OF THIS OBLIGATION is such that, if the Principal shall promptly and faithfully perform and comply with the terms and conditions of said contract; and shall indemnify and save harmless the Owner against and from all cost, expenses, damages, injury or loss to which said Owner may be subjected by reason of any negligent act or omission, including patent infringement, misconduct, want of care or skill, default or failure of performance on the part of said Principal, his agents, subcontractors, materialmen or employees, in the execution or performance of said Contract, then this obligation shall be null and void; otherwise it shall remain in full force and effect.

(1) The said Surety to this bond, for value received, hereby stipulates and agrees that no change or changes, extension of time or extensions of time, alteration or alterations or addition or additions to the terms of the Contract or to the work to be performed thereunder, or the specifications or drawings accompanying same, or the exercise of the Owner's right to do work, shall in any way affect its obligation on this bond, and it does hereby waive notice of any such change or changes, extension of time or extensions of time, alteration or alterations or addition or additions to the terms of the Contract or to the Work or to the specifications or drawings. In addition the Surety to this bond, for value received, hereby agrees to the provisions of the Agreement for increases in the penal amount of this bond and waives notice from the Owner of any such changes, as set forth in the Contract Documents.

(2) If pursuant to the Contract Documents the Principal shall be declared in default by the Owner under the aforesaid Contract, the Surety shall promptly perform this bond agreement in accordance with its terms and conditions. It shall be the duty of the Surety to give an unequivocal notice in writing to the Owner, within twenty-five (25) days after receipt of a declaration of default, of the Surety's election to either remedy the default or defaults promptly or to perform the Contract promptly, time being of the essence. In said notice of election, the Surety shall indicate the date on which the remedy or performance will commence, and it shall then be the duty of the Surety to give prompt notice in writing to the Owner immediately upon completion of (a) the remedy and/or correction of each default, (b) the remedy and/or correction or each item of defective work, (c) the furnishing of each omitted item of work, and (d) the performance of the Contract. The Surety shall not assert its Principal as justification for its failure to give notice of election or for its failure to promptly remedy the default or defaults or perform the Contract.

(3) It is expressly agreed by the Principal and the Surety that the Owner, if he desires to do so, is at liberty to make inquiries at any time of subcontractors, laborers, materialmen, or other parties concerning the status of payments for labor, materials, or services furnished in the prosecution of the work.

(4) No right of action shall accrue on this bond to or for the use of any person or corporation other than the Owner named herein or the legal successors of the Owner.

(5) For the purposes of this bond, the name and address of the Authorized Agent of the Owner to whom correspondence and telecommunications may be addressed and/or with whom business concerning this bond may be conducted will be as follows:

_____

_____

_____

(6) Further, this bond shall be the Performance Bond furnished under O.C.G.A. §§ 36-91-70, et seq. and shall be subject to increase in the penal amount of the bond pursuant to such statutes of the Agreement.

[Signatures on following page]

Approved as to form: _____ Senior Assistant City Attorney	Contractor
Corporate Surety: _____ Surety Name (Type) By:_____ Attorney-In-Fact (Sign) Name:_____ Attorney-In-Fact (Type) (Seal)	By: By:_____ Name:_____ Title:_____ ATTEST: _____ SECRETARY/ASST. SECRETARY [Affix Corporate Seal] By: ATTEST: _____ SECRETARY/ASST. SECRETARY [Affix Corporate Seal]

EXHIBIT K

PAYMENT BOND

Exhibit K, PAYMENT BOND

KNOW ALL MEN BY THESE PRESENTS:

That_____as Principal ("Principal) and
(Legal Title and Address)

_____as Surety ("Surety") are held and firmly bound unto the
(Legal Name and Address of the Surety)

CITY OF ATLANTA as Obligee ("Owner") in the amount of: _____DOLLARS
(Insert Contract Price)

($_____), to which payment Principal and Surety bind themselves, their heirs, executors,

administrators, successors and assigns jointly and severally, firmly by these presents.

WHEREAS, the Principal has entered into an Agreement with the

Owner bearing date of _____ and in the same monetary amount of this bond for **FC-8071, EDS Capitalization and Optimization- North Domestic Terminal** in accordance with the drawings and specifications prepared by: _____
(Here insert Full Name and Title)

which said Contract and Task Order are incorporated herein by reference and made a part hereof, and is hereinafter referred to as the Contract.

NOW, THEREFORE, THE CONDITION OF THIS OBLIGATION is such that if the Principal shall promptly make payment to all claimants as hereinafter defined, for all labor and materials supplied in the prosecution of the work provided for in said Contract, then this obligation shall be void, otherwise it shall remain in full force and effect subject, however, to the following conditions:

(1) The said Surety to this bond, for value received, hereby stipulates and agrees that no change or changes, extension of time or extensions of time, alteration or alterations or addition or additions to the terms of the contract or to the work to be performed thereunder, or the specifications or drawings accompanying same, or the exercise of the Owner's right to do work, shall in any way affect its obligation on this bond, and it does hereby waive notice of any such change or changes, extension of time or extensions of time, alteration or alterations or addition or additions to the terms of the contract or to the Work or to the specifications or drawings. In addition the Surety to this bond, for value received, hereby agrees to the provisions of the Contract for increases in the penal amount of this bond and waives notice from the Owner of any such changes.

(2) A claimant is defined as any subcontractor and any person supplying labor, materials, machinery or equipment in the prosecution of the work provided for in said Contract and as provided in O.C.G.A §§ 36-91-90, et seq.

(3) Every person entitled to the protection hereunder and who has not been paid in full for labor or materials furnished in the prosecution of the work referred to in said bond shall have the rights and obligations set forth in O.C.G.A §§ 36-91-90, et seq.

(4) No action can be instituted on this bond after one year from the completion of the Contract and acceptance of the Project by the proper public authorities.

(5) Further, this bond shall be the Payment Bond furnished in compliance with O.C.G.A. §§ 36-91-90, et seq. and shall be subject to increase in the penal amount of the bond pursuant to such statutes of the Agreement.

Approved as to form: _____ Senior Assistant City Attorney	Contractor
Corporate Surety: _____ Surety Name (Type) By:_____ Attorney-In-Fact (Sign) Name:_____ Attorney-In-Fact (Type) (Seal)	By: By:_____ Name:_____ Title:_____ ATTEST: _____ SECRETARY/ASST. SECRETARY [Affix Corporate Seal] By: ATTEST: _____ SECRETARY/ASST. SECRETARY [Affix Corporate Seal]

EXHIBIT L

CLAIM/DISPUTES PROCEDURES

CITY OF ATLANTA
HARTSFIELD-JACKSON ATLANTA INTERNATIONAL AIRPORT

PROJECT NUMBER FC-8071
EDS CAPITALIZATION AND OPTIMIZATION – NORTH DOMESTIC TERMINAL

EXHIBIT L, CLAIM/DISPUTE RESOLUTION PROCEDURES

1. Claims, Counterclaims, Disputes:

   1.1. All claims, counterclaims, disputes and any other matters in question that may be asserted or raised by Contractor under, or relating to, the Contract or the breach of it shall be processed in accordance with the provisions of this Exhibit (the "**Claim/Dispute Resolution Procedures**") and are subject to audit by the City.

   1.2. Contractor shall not be entitled to any damages or an adjustment in the Total Contract Value, and neither the City nor its designated representatives shall be liable to Contractor or any Subcontractors in tort (including without limitation negligence) or contract, except as specifically provided in the Contract.

2. When Notice and Claim Submittal Become Due:

   2.1. For any Claim under these Claim/Dispute Resolution Procedures to be valid, it shall be based upon written notice promptly delivered by Contractor to the City, but in no event later than seven (7) days after the occurrence of the event giving rise to the Claim, and stating the general nature of the Claim. The responsibility to substantiate a Claim shall rest with the Contractor.

3. Requirements for Contractor Claims:

   3.1. For all Contractor Claims seeking an increase additional compensation, damages, an increase in the Total Contract Value or any change to any Milestone, Contractor shall submit with the Claim an affidavit certifying that:

      3.1.1. the Claim is made in good faith, and the amount claimed accurately reflects the adjustments in the Total Contract Value, addition compensation, damages or the Milestone for which the Contractor believes the City is liable, and covers all direct, supplemental, indirect, consequential, serial and cumulative costs and delays to which Contractor is entitled as a result of the occurrence of the claimed event;

      3.1.2. the supporting cost and pricing data are current, accurate, complete and represent the best of Contractor's knowledge and belief; and

      3.1.3. the affidavit shall be executed by a senior officer of Contractor.

3.2. The attention of Contractor is drawn to state and federal laws regarding penalties for false claims. The City will prosecute Contractor to the fullest extent of the law for the submission of a false, fictitious or unsubstantiated Claim.

3.3. A Claim for an adjustment to any Milestone shall be supported by an analysis of the Project Plan detailing the impact of the event giving rise to the Claim.

4. Determination on a Claim:

4.1. For CONTRACTOR-certified claims of $50,000.00 or less, the ENGINEER will, if requested in writing by the CONTRACTOR, render a determination within sixty (60) days of the request. For CONTRACTOR-certified claims over $50,000.00, the ENGINEER will, within sixty (60) days tender a determination of the Claim or notify the CONTRACTOR of the date by which the determination will be made. If CONTRACTOR and ENGINEER cannot resolve any claim or dispute, CONTRACTOR agrees to participate in good faith in non-binding Mediation if requested by the ENGINEER. The cost of Mediation will be split equally between CONTRACTOR and ENGINEER. If a resolution cannot be reached through mediation the CONTRACTOR's sole appeal of the ENGINEER's Final Determination is to institute legal action in Fulton Superior Court within sixty (60) days after Final

5. Disputes:

5.1. Any Claim that is denied by the City shall be considered a dispute for purposes of these Claim/Dispute Resolution Procedures.

5.2. Pending final resolution of any Claim or dispute, including litigation, Contractor shall proceed diligently with performance of the Services, and comply with any decision of the City.

5.3. In the event the City is a prevailing party in any litigation brought under or to enforce the provisions of the Contract, Contractor shall pay to the City all of the City's costs, expenses and fees associated with the litigation and the preparation thereof, including, but not limited, to reasonable attorneys' fees, expert witness fees, and all expenses incurred. Contractor shall pay the City's reasonable attorneys' fees and other costs whether the services are performed by the City's employees or by independent counsel.

6. Failure to Follow Procedures. The City must receive written notice of all Claims and disputes in strict compliance with these Claim/Dispute Resolution Procedures and the notice provisions contained in the Contract in order to investigate such Claims and disputes and to make decisions that will eliminate or minimize any additional costs or delays to the Services, the Project or to the City's overall airport expansion program. Contractor acknowledges that it has no right in law or equity to seek any increase to the Fees or a change to a Milestone, unless Contractor strictly complies with all requirements of, and times set forth in, these Claim/Dispute Resolution Procedures. Failure by Contractor to meet all of the requirements of and times in

these Claim/Dispute Resolution Procedures shall be deemed an intentional waiver by Contractor of any right to file a lawsuit seeking redress of any type. Compliance with all the requirements of and times in these Claim/Dispute Resolution Procedures is an absolute condition precedent to Contractor having the right to file a lawsuit seeking redress of any type. In the event of non-compliance by Contractor, the City is entitled to have any lawsuit dismissed with prejudice by showing that Contractor did not strictly comply with all of the requirements of these Claim/Dispute Resolution Procedures.

7. Venue. Contractor acknowledges and agrees that the exclusive jurisdiction and venue for any legal action or proceeding, at law or in equity, arising out of or relating to the Contract shall be in the Federal District Court for the Northern District of Georgia or the State Courts in Fulton County, Georgia. Contractor hereby consents and submits to the exclusive personal jurisdiction of such courts, and consents, submits to and agrees that venue for such a legal action or proceeding is proper in said courts and county, regardless of Contractor's domicile. Contractor hereby expressly waives all rights under applicable law or in equity to object to the jurisdiction and venue in said courts and county with respect to such legal action or proceeding.

EXHIBIT M

STATUTORY LIEN RELEASE FOR DESIGN/BUILDER AND SUBONTRACTORS

CITY OF ATLANTA
HARTSFIELD-JACKSON ATLANTA INTERNATIONAL AIRPORT

PROJECT NUMBER FC-8071
EDS CAPITALIZATION AND OPTIMIZATION – NORTH DOMESTIC TERMINAL

EXHIBIT M, CONTRACTOR'S INTERIM LIEN WAIVER AND RELEASE
UPON PROGRESS PAYMENT
(To be provided by Contractor with each Application for Payment)

STATE OF GEORGIA
COUNTY OF _____

The undersigned, _____ ("Contractor"), has been engaged under contract with The City of Atlanta ("City") to furnish certain materials, equipment, services, and/or labor for the construction of improvements known as the _____, together with all improvements and appurtenances attendant thereto ("Project"), which Project is being constructed in the County of _____, State of Georgia on property that is owned by the City.

Upon receipt of the sum of $_____, the Contractor waives and releases any and all claims, demands, actions, causes of action or other rights it may have against City related to the Project through the date of _____, _____ ("Current Date") and reserving those rights that the Contractor might have in any retained amounts on account of materials, equipment, services and/or labor furnished by the undersigned to or on account of the City or any other entity for said Project. Exceptions as follows:

(if no exception or "none" is entered above, undersigned shall be deemed not to have reserved any claim.)

Contractor affirms, warrants, and represents that all laborers, materialmen, mechanics, manufacturers, suppliers, and subcontractors who have furnished services, labor, equipment, or materials, or any one of these items to the Contractor have been paid in full for all work performed and all materials, equipment, labor or services supplied to the Contractor for use at the Project through and including _____, ____ (date of Contractor's last prior Application for Payment).

Subject to any exceptions (if any) listed above, Contractor further affirms, warrants, and represents that there are no outstanding claims of any nature, contractual or otherwise, or for

any personal injury, death or property damage, arising from or associated with the performance of the Contractor's work on the Project through and including the date hereof which might be the basis of any claim, suit, lien, or demand that could be asserted against the City.

This Waiver is freely and voluntarily given and the undersigned acknowledges and represents that it has fully reviewed the terms and conditions of this Waiver, that it is fully informed with respect to the legal effect of this Waiver, and that it has voluntary chosen to accept the terms and conditions of this Waiver in return for the payment recited above. Subject to any exceptions (if any) listed above, Contractor agrees to indemnify, hold harmless and defend City against any and all loss, claims, damages, costs or expense, of any nature whatsoever, including attorneys' fees, arising out of any claims or demands made by any of its employees, laborers, materialmen, subcontractors and consultants, of any tier, for materials, services, equipment and labor supplied to the Project through the Current Date.

The undersigned further agrees that making and receipt of payment and execution of this Waiver shall in no way release the undersigned from its continuing obligations with respect to the completion of any work remaining undone, including any obligations of the undersigned to City.

FOR CONTRACTOR:

Applicable to Application for Payment No(s). _____
Signed:_____
By:_____
Title: _____
Date: _____

AFFIDAVIT

On this _____ day of _____, 20_____, before me appeared the above-signed, known or identified to me personally, who, being first duly sworn, did say that s/he is the authorized representative of the Contractor and that this document was signed under oath personally and on behalf of the Contractor.

_____
Notary Public
My Commission Expires: _____

SUBCONTRACTOR'S INTERIM LIEN WAIVER AND RELEASE UPON PROGRESS PAYMENT
(To be provided by Subcontractors with each application for payment)

STATE OF GEORGIA
COUNTY OF _____

The undersigned _____ ("Subcontractor"), has been engaged under contract with _____ ("Contractor") to furnish certain materials, equipment, services, and/or labor for the construction of improvements known as the _____, together with all improvements and appurtenances attendant thereto ("Project"), which Project is being constructed in the County of _____, State of Georgia on property that is owned by the City of Atlanta (the "City").

Upon receipt of the sum of $_____, the Subcontractor waives and releases any and all claims, demands, actions, causes of action or other rights against the City and Contractor through the date of _____, ____ ("Current Date") and reserving those rights that the Subcontractor might have in any retained amounts on account of materials, equipment, services and/or labor furnished by the undersigned to or on account of Contractor for said Project. Exceptions as follows:

(if no exception or "none" is entered above, undersigned shall be deemed not to have reserved any claim.)

Subcontractor affirms, warrants, and represents that all laborers, materialmen, mechanics, manufacturers, suppliers, and sub-subcontractors who have furnished services, labor, equipment, or materials, or any one of these items to Subcontractor have been paid in full for all work performed and all materials, equipment, labor or services supplied to the Subcontractor for use at the Project through and including _____, _____ (date of Subcontractor's last prior application for payment).

Subject to any exceptions (if any) listed above, the Subcontractor further affirms, warrants, and represents that there are no outstanding claims of any nature, contractual or otherwise, or for any personal injury, death or property damage, arising from or associated with the performance of the Subcontractor's work through and including the date hereof which might be the basis of any claim, suit, lien, or demand for work on the Project that could be asserted against either Owner, Contractor, the Project, and all property, real and personal, related to the Project.

This Waiver is freely and voluntarily given and the Subcontractor acknowledges and represents that it has fully reviewed the terms and conditions of this Waiver, that it is fully informed with respect to the legal effect of this Waiver, and that it has voluntarily chosen to accept the terms and conditions of this Waiver in return for the payment recited above.

The undersigned understands that the failure to complete correctly or fully any of the blank spaces in this document shall not invalidate the document so long as the subject matter of this Waiver may reasonably be determined.

FOR SUBCONTRACTOR:

Applicable to Application for Payment No(s). _____
Signed: _____
By: _____
Title: _____
Date:_____

AFFIDAVIT

On this _____ day of _____, 20_____, before me appeared the above-signed, known or identified to me personally, who, being first duly sworn, did say that s/he is the authorized representative of the Subcontractor and that this document was signed under oath personally and on behalf of the Subcontractor.

_____
Notary Public
My Commission Expires: _____

APPENDIX A

OFFICE OF CONTRACT COMPLIANCE REQUIREMENTS

CITY OF ATLANTA

Kasim Reed
Mayor

SUITE 1700
55 TRINITY AVENUE, SW
ATLANTA, GA 30303
(404) 330-6010 Fax: (404) 658-7359
Internet Home Page: www.atlantaga.gov

OFFICE OF CONTRACT COMPLIANCE
Larry Scott
Director
lscott@atlantaga.gov

June 12, 2015

RE: Project No.: FC- 8071, Explosive Detection System (EDS) Recapitalization and Optimization

Dear Prospective City of Atlanta Bidder:

This packet is substantially different from all previous packets. The Office of Contract Compliance's **Disadvantaged Business Enterprises (DBE)** information is an integral part of every Federally Funded City of Atlanta bid or proposal. Your efforts to assist the City of Atlanta in mitigating the present effects of past discrimination against disadvantaged business enterprises are essential. Please read all of the information very carefully. Pay close attention to the contract goals for this project and the DBE program reminders listed on page DBE 5.

Many businesses that appear in our register as certified M/FBEs or SBEs are not currently certified as **Disadvantaged Business Enterprises.** Certification of DBE firms is being handled by a different agency. Please see page DBE 2 for details of certification of DBEs. Thank you for your extra attention to the DBE program.

If you have any questions about the information included in this section of the solicitation please contact the City of Atlanta Office of Contract Compliance at (404) 330-6010.

The City of Atlanta looks forward to the opportunity to do business with your company.

TABLE OF CONTENTS

Policy Statement 1

Implementation of DBE Policy Contract Goals 2

Good Faith Efforts 3

Demonstration of Good Faith Efforts 3

DBE Contract Goals 4

Monitoring of DBE Policy 5

DBE Program Reminders 6

EEO Policy 7

Business Development Programs 7

COA Contract Compliance Certificate DBE Form 1 8

DBE Subcontractor Contact – DBE Form 2 (pg 1 of 2) 9

DBE Subcontractor Contact – DBE Form 2 (pg 2 of 2) 9

DBE Project Subcontractor Project Plan (Design/Construction) DBE Form 3 10

DBE Project Subcontractor Project Plan (Operations/Maintenance) DBE Form 3 11

First Source Jobs Program Policy Statement 12

First Source Jobs Information Form (4) 13

First Source Agreement Form (5) 14

Components of a JV Agreement – Attachment 1 15

DBE Mentor Protégé Initiatives – Attachment 2 (pg 1 of 2) 16

DBE Mentor Protégé Initiatives – Attachment 2 (pg 2 of 2) 17

Additional DBE Resources 18

CITY OF ATLANTA

SUITE 1700
55 TRINITY AVENUE, SW
ATLANTA, GA 30303
(404) 330-6010 Fax: (404) 658-7359
Internet Home Page: www.atlantaga.gov

Kasim Reed
Mayor

OFFICE OF CONTRACT COMPLIANCE
Larry Scotts
Director
lscott@atlantaga.gov

CITY OF ATLANTA

DISADVANTAGED BUSINESS ENTERPRISE

POLICY STATEMENT

It is the policy of the City of Atlanta to ensure that DBEs, as defined in 49 CFR Parts 23 and 26, have an equal opportunity to receive and participate in DOT-assisted contracts. It is also the City of Atlanta's policy:

1. To ensure non-discrimination in the award and administration of DOT assisted Opportunities;

2. To create a level playing field on which DBEs can compete fairly for DOT Assisted contracts;

3. To ensure that the DBE program is narrowly tailored in accordance with applicable law;

4. To ensure that only firms that fully meet 49 CFR Parts 23 and 26 eligibility standards are permitted to participate as DBEs;

5. To help remove barriers to the participation of DBEs in DOT assisted contracts; and

6. To assist the development of firms that can compete successfully in the market place outside the DBE program.

IMPLEMENTATION OF DBE POLICY
CONTRACT GOALS

The City of Atlanta establishes contract goals only on those contracts that have subcontracting and/or joint venture possibilities. The size of the contract goal is adopted on a project by project basis, impacted by the circumstances of each such contract (e.g. type and location of work, availability of DBEs to perform the particular type of work), in relation to the City's annual DBE goal.

The City of Atlanta expresses its contract goals as a percentage of the total amount of each particular DOT-assisted contract.

Each solicitation for which a contract goal has been established requires the bidders/offerors to submit the following information as part of their bid or offer:

1. The names, addresses and phone numbers of DBE firms that will participate in the contract;

2. A description of the work that each DBE will perform;

3. The dollar amount of the participation of each DBE firm's participation;

4. Written and signed documentation of commitment to use a DBE subcontractor whose participation is submitted to meet a contract goal;

5. Written and signed confirmation from the DBE that it is participating in the contract as provided in the prime contractor's commitment; and,

6. If the contract goal is not met, evidence of good faith efforts to meet the goal.

The City of Atlanta has designated the Office of Contract Compliance as its DBE Liaison Office. The address of OCC is 55 Trinity Avenue, Ste. 1700, Atlanta, Georgia 30303. The phone number is (404) 330-6010.

Each contracting opportunity at the airport is individually evaluated and the individual contract goal is adjusted as appropriate in relation to the City's Annual DBE goal. The City of Atlanta will express its contract goal as a percentage of the total amount of each individual DOT-assisted contract.

GOOD FAITH EFFORTS

The City of Atlanta treats bidder/offerors' compliance with good faith effort requirements as a matter of responsiveness. Compliance of bidders with the DBE requirements, including good faith efforts, will be evaluated according to the standards of 49 CFR Parts 23 and 26.

DEMONSTRATION OF GOOD FAITH EFFORTS

The obligation of the bidder/offeror is to make good faith efforts to meet the goal. The bidder/offeror can demonstrate that it has done so either by meeting the contract goal or documenting its good faith efforts. Examples of good faith efforts are found at 49 CFR Parts 23 and 26 Appendix A and are attached to this document.

OCC is responsible for determining whether a bidder/offeror who has not met the contract goal has documented sufficient good faith efforts to be regarded as responsive. In determining whether a bidder/offeror is responsive to the DBE goals, OCC will consider whether the information submitted by that bidder/offeror is complete, accurate and adequately documents the bidder's/offeror's good faith efforts. Bidders who are informed that they have not met the "good faith efforts" requirements are entitled to administrative reconsideration of that determination, per 49 CFR 26.53(d).

DISADVANTAGED BUSINESS ENTERPRISE
CONTRACT GOALS

PROJECT # FC- 8071, Explosive Detection System (EDS) Recapitalization and Optimization

The Disadvantaged Business Enterprise (DBE) contract participation goal for the **construction scope** associated with this project is:

12.00%

OCC will count DBE participation in the form of a certified DBE a prime contractor, DBE certified joint venture partner (Joint ventures are not mandated on this contracting opportunity), or certified DBE sub-contractor arrangement. The above referenced goal will be measured against **total contract value inclusive of any change orders and/or miscellaneous modifications** that may occur throughout the life of the project.

MONITORING OF DBE POLICY

Upon execution of a contract with the City of Atlanta, the successful bidder's Subcontractor Project Plan will become a part of the contract between the bidder and the City of Atlanta. The Subcontractor Project Plan will be monitored by the City of Atlanta's Office of Contract Compliance for adherence with the plan. The successful bidder will be required to provide specific DBE information on a monthly basis that demonstrates the use of subcontractors and suppliers as indicated on the Subcontractor Project Plan. The failure of the successful bidder to provide the specific DBE information by the specified date each month shall be sufficient cause for the City to withhold approval of the successful bidder's invoices for progress payments, increase the amount of the successful bidder's retainage, require joint check issuance, or evoke any other penalties as set forth in the City of Atlanta Code of Ordinances, Sections 2-1452 and 2-1456.

The City of Atlanta will require prime contractors to maintain records, documents, and receipts of gross revenue attributed to DBEs for three years following the performance of the contract. Those records must be made available for inspection upon request by any authorized representative of the City of Atlanta or DOT. This reporting requirement also extends to any certified DBE subcontractor.

The City of Atlanta will keep a running tally of actual gross receipts attributed to the DBE firms from the time of the contract award.

The City of Atlanta's Office of Contract Compliance, or its designee, will perform interim audits of gross receipts and contract payments to DBEs if applicable. The audit will review payments to DBE subcontractors to ensure that the actual amount paid to DBE subcontractors equals or exceeds the dollar amounts stated in the schedule of DBE participation.

DBE PROGRAM REMINDERS

1. DBE Plan. All proposals must contain a DBE Participation plan in accordance with the goals set forth above. The DBE plan must identify each DBE's name, address, and contact name, work description, and contract amount.

2. Subcontractor and Supplier Participation. On projects with subcontractor and supplier opportunities, disadvantaged business enterprise participation may only be met through certified businesses that meet the standards of 49 CFR Parts 23 and 26, Subparts D and E. Each prime contractor must meet the requirements of the DBE program.

3. Failure to Meet DBE Goals. Any bidder unable to meet the DBE goals must document the good faith efforts it made to meet the goals. Documentation must follow the requirements of the DBE plan pursuant to 49 CFR Parts 23 and 26 etc. If the City determines that good faith efforts were not made, the bidder is entitled to administrative reconsideration under 49 CFR 26.53.

4. Certification. As of March 1, 2004, the City no longer does DBE Certification. DBE Certifications are now handled by the GA Department of Transportation (GA DOT). The contact number for GA DOT is (404) 656-5267

5. Reporting. The successful bidder must submit monthly DBE participation reports to OCC, in a form prescribed by the Office of Contract Compliance.

6. DBE Concession Program. The DBE Concession Program is governed by the provisions of "49 CFR Parts 23 and 26".

7. Contract Assurance. The Concessionaire shall not discriminate on the basis of race, color, national origin, sex, religion, or sexual orientation in the performance of this contract. The contractor shall carry out applicable requirements of 49 CFR Part 26 in the award and administration of DOT assisted contracts. Failure by the contractor to carry out these requirements is a material breach of this contract, which may result in the termination of this contract or such other remedy as the City of Atlanta deems appropriate. Anti-discrimination provisions based upon religion and sexual orientation are not included by or enforceable through 49 CFR Parts 23 and 26 but are enforceable through the City of Atlanta regulations.

EQUAL EMPLOYMENT OPPORTUNITY POLICY

PROJECT # FC- 8071, Explosive Detection System (EDS) Recapitalization and Optimization

IMPLEMENTATION OF EEO POLICY

The City effectuates its EEO policy by adopting racial and gender workforce goals for every contractor performing work for the City of Atlanta on federally funded projects. These goals are derived from the work force demographics set forth by the United States Department of Labor Federal Office of Contract Compliance. These goals are not included in or enforceable through 49 CFR Part 26.

A FIRM 'S WORK FORCE CONSISTING OF LESS THAN TWENTY-FIVE (25) EMPLOYEES IS EXEMPT FROM THE FOLLOWING EEO REQUIREMENTS

The Office of Federal Contract Compliance Programs (OFCCP) is the office of the United States Department of Labor that has responsibility for administration and enforcement of the Equal Employment Opportunity requirements under the contract compliance program which is authorized by Executive Order 11246 as amended, Section 503 of the Rehabilitation Act of 1973, and the Vietnam Era Veterans Readjustment Act of 1974. The programs mentioned above prohibit Federal contractors and sub-contractors from employment discrimination based on Race, Sex, National Origin, Religion, Sexual Orientation, and against persons with Disabilities or Vietnam Era Veterans, and requires such contractors to take affirmative action to ensure equal employment opportunity.

BUSINESS DEVELOPMENT PROGRAMS

Though the DBE program primarily focuses on DBE participation at the subcontractor level, it is also important to provide DBEs with experience, training and skill development at the prime contractor level. The City of Atlanta encourages joint ventures between a prime contractor and an DBE, or a mentor protégé agreement between a prime contractor and a DBE whenever feasible on applicable contracts. The general description of the joint venture and mentor-protégé agreements is found on **Attachment 1 and Attachment 2** hereto and in the Atlanta Code of Ordinances.

CITY OF ATLANTA CONTRACT COMPLIANCE CERTIFICATE

The undersigned has prepared and submitted all the documents attached hereto. The documents have been prepared with a full understanding of the City's goals and objectives with respect to increased opportunity in the proposed work to be undertaken in performance of this project. It is the company's intent to achieve the airport Concessions Disadvantaged Business Enterprise goals, the Equal Employment Opportunity goals, and the First Source Jobs Employment goals.

All information and representations contained herein and submitted with this bid or proposal are true and correct.

_____
Witness

_____
Signature
Company Authorized Representative

Date: _____

Company Name: _____

FC Number: _____

Project Name: _____

DBE -1

SUBCONTRACTOR CONTACT FORM

List all subcontractors or suppliers (Both DBE and Non-DBE Certified) that were contacted regarding this project.

Name of Sub-contractor/ Supplier	Contact Name, Address and Phone Number	City Of Atlanta Business License? (Yes or No)	Type of Work Solicited for	Business Ownership (see code below)	Certification No. and Expiration Date	Results of Contact

Name of Sub-contractor/ Supplier	Contact Name, Address and Phone Number	City Of Atlanta Business License? (Yes or No)	Type of Work Solicited for	Business Ownership (see code below)	Certification No. and Expiration Date	Results of Contact

Business Ownership Code: AABE - African American Business Enterprise, HABE – Hispanic Business Enterprise, FBE – Female Business Enterprise, APABE – Asian (Pacific Islander) American Business Enterprise

Company Name: _____ Project Name: _____ FC#: _____

Signature: _____ **Date:** _____

***Note: COA M/FBE certification does not count for DBE program goals. Firms must be certified by the GA DOT.

EQUAL BUSINESS OPPORTUNITY SUBCONTRACTOR PROJECT PLAN
SUBCONTRACTOR/SUPPLIER UTILIZATION

List all Majority and Airport Concessions Disadvantaged Business Enterprises (DBE) subcontractors/suppliers, including lower tiers, to be used on this project.

Name of Sub-contractor/ Supplier	Contact Name, Address and Phone Number	City of Atlanta Business License? (yes or no)	NIAC Code	Type of Work to be Performed	Ethnicity of DBE Ownership (see code below)	DBE Certification No. and Expiration Date	Dollar ($) Value of Work and Scope of Work	Percentage (%) of Total Bid Amount

Total DBE%_____

Code: AABE - African American Business Enterprise, HABE – Hispanic American Business Enterprise, FBE – Female Business Enterprise, **APABE – Asian (Pacific Islander) American Business Enterprise** **(***Note… EBO certification does not qualify for DBE projects)**

Proponent's Co. Name: _____ **Project Name:** _____ **FC#:** _____

Proponent's Contact Number:_____ **Signature:**_____ **Date:** _____

(THIS PAGE SHALL BE SUBMITTED FOR EACH DBE FIRM)

LETTER OF INTENT

Disadvantage Business Enterprise

Bidder/Offeror Name:_____

Address:_____

City:_____ State:_____ Zip:_____

DBE Firm: DBE Firm:_____

Address:_____

City:_____ State:_____ Zip:_____

DBE Contact Person: Name:_____ Phone: (___)_____

Expiration Date of DBE Certification:_____

DBE is performing as: ☐ Prime Contractor ☐ Sub contractor ☐ Joint Venture

Work item(s) to be performed by DBE	Description of Work Item	Quantity	Total

The bidder/offeror is committed to utilizing the above-named DBE firm for the work described above. The estimated participation is as follows:

DBE contract amount: $_____ Percent of total contract:_____%

AFFIRMATION:
The above-named DBE firm affirms that it will perform the portion of the contract for the estimated dollar value as stated above.

By: _____
(Print name) *(Title)*

_____
(signature) *(date)*

* In the event the bidder/offeror does not receive award of the prime contract, any and all representations in this Letter of Intent and Affirmation shall be null and void.

FIRST SOURCE JOBS PROGRAM POLICY STATEMENT

It is the policy of the City of Atlanta to provide job opportunities to the residents of the City of Atlanta whenever possible. Every contract with the City of Atlanta creates a potential pool of new employment opportunities. The prime contractor is expected to work with the First Source Jobs Program to fill at least 50% of all new entry-level jobs, which arise from this project, with residents of the City of Atlanta. For more specific information about the First Source Jobs Program contact Michael Sterling of the Atlanta Workforce Development Agency at (404) 546-3000. This City of Atlanta program is not included in or enforceable through 49 CFR Parts 23 and 26.

Michael Sterling
City of Atlanta
Atlanta Workforce Development Agency
Executive Director
(404) 546-3000 (O)

FIRST SOURCE JOBS INFORMATION FORM

Company Name: _____

FC Number: _____

Project Name: _____

The following entry-level positions will become available as a result of the above referenced contract with the City of Atlanta:

1.

2.

3.

4.

5.

Include a job description and all required qualifications for each position listed above.

Identify a company representative and contact phone number who will be responsible for coordinating with the First Source Jobs Program.

Company Representative: _____

Phone: _____

FORM 4

THIS AGREEMENT REGARDING THE USE OF THE FIRST SOURCE JOBS PROGRAM BY CONTRACTORS WITH THE CITY OF ATLANTA TO FILL ENTRY LEVEL JOBS is made and entered into by _____

_____

This_____ day of_____, 201__.

The City of Atlanta requires the immediate beneficiary or primary contractor for every eligible project to enter into a First Source Jobs employment agreement. The contractor agrees to the following terms and conditions:

- The first source for finding employees to fill all entry level jobs Created by the eligible project will be the First Source Program.
- The contractor will make every effort to fill 50% of the entry level jobs created by this eligible project with applicants from the First Source Program.
- The contractor shall make good faith effort to reach the goal of this employment agreement.
- Details as to the number and description of each entry level job must be provided with the bid.
- The contractor shall comply with the spirit of the First Source Jobs Policy beyond the duration of this agreement and continue to make good faith attempts to hire employees of similar backgrounds to those participating in the First Source Program.
- The contractor as a condition of transfer, assignment or otherwise shall require the transferee to agree in writing to the terms of the employment Agreement.

Upon a determination that a beneficiary or contractor has failed to comply with the terms of this Agreement, the City may impose the following penalties based on the severity of the non-compliance:

- The City of Atlanta may withhold payment from the contractor.
- The City of Atlanta may withhold 10 percent of all future payments on the contract until the contractor is in compliance
- The City of Atlanta may refuse all future bids on city projects or applications for financials assistance in any form from the City until the contractor demonstrated that the First Source requirements have been met, or cancellation of the eligible project.
- The City of Atlanta may cancel the eligible project.

All terms stated herein can be found in the City of Atlanta Code of Ordinances Sections 5-8002 through 5-8005.

The undersigned hereby agrees to the terms and conditions set forth in this agreement.

_____

Contractor

FORM 5

ATTACHMENT 1

"Components of a Joint Venture Agreement with DBE Participation as Counted under 49 CFR 26.55 (b)"

For credit forward toward the contract goal under Part 26, a joint venture agreement with a certified disadvantaged business enterprise should include at a minimum:

- The initial capital investment of each venture partner.
- The proportional allocation of profits and losses to each venture partner.
- The sharing of the right to control the ownership and management of the joint venture.
- A description of the distinct and clearly defined portion of the work to be performed by the DBE.
- The method of and responsibility for accounting.
- The methods by which disputes are resolved.
- All other pertinent factors of the joint venture.

ATTACHMENT 2

DISADVANTAGED BUSINESS ENTERPRISE PROGRAM
MENTOR PROTÉGÉ INITIATIVES

The mentor-protégé program is an initiative, in accordance with Appendix D to 49 CFR Part 26, to encourage and develop certified Disadvantaged Business Enterprises in contracting with city government in areas that Disadvantaged Business Enterprises have historically been underrepresented due to various discriminatory barriers. This program, implemented on projects with a projected value of 5 million dollars or more, will enable prime contractors of all ethnic and gender categories to provide technical, administrative, and other assistance to smaller, developing businesses. Companies must successfully complete the Disadvantaged Business Enterprise certification process in order to participate as a protégé in this program. Additionally, participation as a certified Disadvantaged Business Enterprise protégé team member will not preclude the inclusion of the same certified Disadvantaged Business Enterprise team member as a self-performing subcontractor in the DBE plan. The subcontracting by the certified Disadvantaged Business Enterprise protégé team member will be applied toward the satisfaction of the DBE goals in accordance with 49 CFR 26, Subpart C, 26.55.

Examples of good faith efforts are found in 49 CFR Parts 23 and 26, Appendix A that is attached to this package.

"Components of a Mentor-Protégé Agreement with DBE Participation as Counted under 49 CFR 26.55"

The Mentor-Protégé agreement between a prime contractor and the DBE protégé will provide an excellent development opportunity for the disadvantaged business enterprise protégé. Under the guidance of the mentor, the protégé will gain valuable knowledge and experience that will ultimately enhance the capabilities of the protégé. Additionally, the protégé has the opportunity to gain this knowledge and experience without exposing itself to the normal business risks that are associated with projects of this size.

As part of the City's Part 26 DBE program and subject to 49 CFR 26.35 and Appendix D, a mentor may meet up to half of the contract goal for this contract by using a DBE protégé as a self-performing subcontractor through a formal mentor-protégé program. The successful prime for this project remains obligated to meet the entire contract goal for this project, including whatever portion of the goal that cannot be met by the protégé. Only independent DBE forms already certified by the City at this time (see "Certification", page DBE 2) may participate as protégés.

The mentor may not (1) enter into a mentor-protégé agreement as a substitute for compliance with the DBE program, (2) use such an agreement to circumvent the obligations of the DBE program, (3) create a new firm to serve as a protégé (4) require a potential protégé to pay the mentor for the privilege of participating in the agreement, or (5) bar the protégé from performing work on this contract.

To meet the requirements of Part 26, the mentor-protégé team must present a written development plan and formal agreement between the parties to the City of Atlanta prior to executing the final contract.

The agreement should include, but is not limited to the following information:

- The type of collaboration, training and assistance to be provided. The areas of assistance encouraged include, but are not limited to, bonding and insurance support, management and scheduling support.

- The specific rights and responsibilities of the Mentor and the Protégé.

- Names or titles of the individuals from the Mentor responsible for working directly with the Protégé in the areas identified above.

- Names or titles of the individuals from the Protégé responsible for working directly with the Mentor in the areas listed above.

- The term of the agreement.

- A system to monitor and evaluate the effectiveness of the Mentor Protégé agreement.

- A plan detailing how the Mentor plans to include the Protégé on non-governmental projects, governmental projects, and DOT-assisted projects during the term of the agreement.

- Protégé shall not subcontract any of their work to the mentor firm or to other contractors without the approval of the OCC. Subcontracted work will not be counted toward DBE goals except as specified by Part 26.

- Mentor and Protégé representatives may not bid or otherwise participate independently on a contract in which the Mentor Protégé team is bidding or participating as a team.

- Work self-performed by the protégé may be used to fulfill up to one half of the DBE contract goal on this project.

- DBE credit will not be awarded to a non-DBE mentor firm for using its own protégé firm for more than every other contract performed by the protégé.

- Staff members from the Office of Contract Compliance will be available to review draft mentor-protégé agreements for compliance with this section.

Additional Resources Proponents May Contact in an Effort to Identify DBE Participants

Fulton County Government
Department of Purchasing &
Contract Compliance
Rholanda Stanberry, CPPB
Contract Compliance Administrator
130 Peachtree Street
Suite 1167
Atlanta, GA 30303
Phone: 404-612-6304 /404 335-9415
E-mail: rholanda.stanberry@fultoncountyga.gov

Metropolitan Atlanta Rapid Transit Authority
(MARTA)
Ms. Pamelia T. Smith
Office of Diversity and Equal Opportunity
2424 Piedmont Road, NE
Atlanta, GA 30324
EEO/DBE Analyst
404-848-4646 (p)
E-Mail: ptsmith@itsmarta.com

Cobb County
Sharon Jones
Department of Transportation
463 Commerce Park Drive, Suite 112
Marietta, GA 30060-2737
Phone: 770-528-1600
Fax: 770-528-4360
Email: sharon.jones@cobbcounty.org

Dekalb County
Felton Williams
Contract Compliance Officer
1300 Commerce Drive
Room 202
Decatur, GA 30030
Phone: 404-371-6312
Email: tgphilli@co.dekalb.ga.us

U.S. Small Business Administration
Dinora Gonzalez
Economic Development Specialist
233 Peachtree Street, NE
Suite 1900
Atlanta, GA 30303
Phone: 404-331-0100 ext. 410
Email: dinora.gonalez-cook@sba.com

Georgia Department of Transportation
Equal Opportunity Office
Ms. Yolanda L. Colzie
One Georgia Center
600 West Peachtree Street, 7th Floor
Atlanta, Georgia 30308
Office: 404-631-1972
Fax: 404-631-1943
E-mail: ycolzie@dot.ga.gov

Georgia Department of Economic Development
Enterpreneur Small Business
Mary Ellen McClanahan
75 Fifth Street, NW
Atlanta, Georgia 30308
Phone: 404-962-4820
Email: memcclanahan@georgia.org

MBDA-Business Center- Atlanta
Donna Ennis
Project Director
75 5th Street, NW
Suite 300
Atlanta, GA 30308
Phone: 404-894-2096
Email: donna.ennis@innovate.gatech.edu

Gwinnett County
Bryant Davis
Purchasing Director
75 Langley Drive
Lawrenceville, GA 30045
Phone: 770-822-8725
Fax: 770-822-8735 or 770-822-8728
Email: greende@co.gwinnett.ga.us

Atlanta Board of Education
Randall Sellars, Director of Procurement Services
130 Trinity Avenue
Atlanta, Georgia 30303
Phone: 404-802-1568
Atlanta, GA 30334
Email: rasellers@atlanta.k12.ga.us

EXHIBIT B

CONTRACT ADMINISTRATION FORMS

APPENDIX B

CONTRACT ADMINISTRATION FORMS

DOCUMENT	PURPOSE
Contract/Task Order Change Form [Sec.2 - 1292(d)]	Make all contract changes except change contract value. Also, allocates Project Contingency Funds.
Request for Information	To be used by Contractor to request both technical or administrative information / direction from the City.
Submittal Form	To be used by Contractor as the transmittal cover and record for all project transmittals.
Force Account Work Report	To be used by the Contractor to denote labor, equipment and materials expended in the performance of the force account work. Work reports must be recorded and signed off on a daily basis by the City Inspector and Contractor signifying agreement.
Request for Payment of Stored Materials	To be used by the Contractor as the materials list used exclusively for referenced project when materials have to be stored off site.
Certificate of Substantial Completion Form	To be used by the Contractor and submitted to the City to confirm that the scope of work is substantially completed according to the contract documents.
Notice of Final Acceptance Form	To be used by the Contractor to confirm the date of final acceptance of the project when the project as a whole conforms to all requirements of the contract.
Corrective Action Form	To be used by the Contractor to document conditions, their root cause(s) and corrective action required. The City will document the verification of corrective action.
Safety Construction Incident Report Form	To be used by City Safety department along with appropriate OCIP Form.
Construction Change Notice Form	To be used by the Contractor to describe the field change, cost and schedule impact to inform the City of a potential change order.
Non- Compliance Form (NCN)	To be used by the City to document non-compliant materials and equipment, their respective locations and corrective actions taken. Field remarks are noted by the City Inspector.

CONTRACT / TASK ORDER CHANGE FORM [SEC. 2-1292(d)]

1. CONTRACT INFORMATION SECTION

☐ CONTRACT CHANGE ☐ TASK ORDER CHANGE DATE: Click here to enter text.

OWNER: CITY OF ATLANTA ("CITY" OR "DOA")

CONSULTANT/CONTRACTOR: Click here to enter text.

CONTRACT / FC #: Click here to enter text.

TASK ORDER #: Click here to enter text.

CHANGE #: Click here to enter text.

PROJECT NAME: Click here to enter text.

WBS #: Click here to enter text.

2. TYPE OF CHANGE

☐ SCOPE
☐ SCHEDULE
☐ COST (FOR TASK ORDER VALUE CHANGE ONLY)
☐ MODIFY SCHEDULE OF VALUES
☐ ADMINISTRATIVE
☐ OTHER

_____

☐ CONTINGENCY ASSIGNMENT

3. REASON FOR CHANGE

Click here to enter text.

4. DESCRIPTION OF CHANGE

Click here to enter text.

5. CHANGE REQUESTED BY: ☐ CONTRACTOR ☐ CONSULTANT ☐ DOA

6. SCHEDULE IMPACT

Click here to enter text.

7. COST IMPACT (FOR TASK ORDER VALUE CHANGE ONLY)

8. FUNDING

9. FINANCIAL SUMMARY (FOR TASK ORDER VALUE CHANGE ONLY)

Click here to enter text.

10. ATTACHMENTS

☒ Original Scope of Services ☐ _____

CONTRACT / TASK ORDER CHANGE FORM [SEC. 2-1292(d)]

11. RELEASE LANGUAGE

Consultant/Contractor acknowledges and agrees that the consideration set forth in this Contract / Task Order Change Form represent a full and final resolution of all consideration agreed upon by Consultant/Contractor for any monetary impact or time impact of any type arising from, related to or involved with respect to the subject matter of this Contract / Task Order Change Form including, without limitation, all direct costs, indirect costs, overhead costs, cumulative impacts, ripple effect, impact on any other Work, as defined in the underlying Contract and/or Task Order, general and administrative expenses, and profit.

Consultant/Contractor and its members, employees, directors, officers, agents, attorneys, subcontractors of any tier, insurers, sureties, assigns, predecessors and successors hereby release, remise and forever discharge the City and its present and former officers, employees, directors, officials, agents, attorneys, designers, consultants, subconsultants, construction managers, insurers, assigns, predecessors and successors (collectively, the "City Releasees"), from all debts, claims, demands, actions, causes of action, sums of money, controversies, costs, fees, lawsuits, omissions, and liabilities whatsoever, of any and every name, both at law or in equity, which Consultant/Contractor has, had, or could have had against the City Releasees, collectively or individually, through the effective date of this Contract / Task Order Change Form, related to or arising from the subject of this Contract / Task Order Change Form, except as may be specifically provided in this Contract / Task Order Change Form.

This Contract / Task Order Change Form constitutes the entire agreement between the City and Consultant/Contractor ("parties") with respect to its subject matter contained herein and supersedes all prior agreements, understandings, expectations, and discussions of the parties, whether oral or written, and there are no representations or other agreements between the parties in connection with this subject matter contained herein except as specifically set forth in this Contract / Task Order Change Form. The parties shall bear their own costs, expenses, and attorneys' fees incurred in or arising out of or in any way related to the matters contained in this Contract / Task Order Change Form. For purposes of interpretation, this Change Order shall not be deemed to be drafted by any party, and any ambiguity shall not be construed against any party. This Contract / Task Order Change Form is executed in accordance with all applicable Ordinances of the City of Atlanta and will be binding on both parties in accordance therewith.

Unless explicitly set forth in this Contract / Task Order Change Form, all terms, covenants and conditions of the underlying Contract and/or Task Order, except as duly modified in accordance with the Ordinances of the City of Atlanta by previous Addendums, or Change Orders, if any, shall remain in full force and effect.

[SIGNATURES BEGIN ON NEXT PAGE]

CONTRACT / TASK ORDER CHANGE FORM [SEC. 2-1292(d)]

OWNER:	CONSULTANT/CONTRACTOR:
CITY OF ATLANTA	Insert Name
Approved By:	By: _____
_____ P&D Assistant General Manager Date	Name: _____
	Title: _____
Recommended By:	_____ Corporate Secretary/Assistant Secretary
_____ Director Date	[Affix Corporate Seal]
_____ Assistant Director Date	**Non-Corporate:**
	By: _____
_____ Project Manager Date	Name: _____
	Title: _____
Submitted By:	Notary Public: _____
	My Commission Expires: _____
_____ Construction Manager Date	

Hartsfield-Jackson Atlanta International Airport

Request For Information

RFI Title:

RFI NO.

ject Name: _____ **Date:** _____

Contract : WBS:

Drawing Ref: *Specification Reference:*

Submitted To : *Submitted By:*

Company: DOA -P&D **Company:**

Address: 1255 South Loop Road **Address:**

College Park, Georgia 30337

Information Requested:

Prepared By:

Cost Increase		Critical		Routine	

Contractor Recommendation:

Prepared By:

Response:

.esponse By:

Distribution:
Contractor
CM
PM

Hartsfield-Jackson
Atlanta International Airport

SUBMITTAL FORM

Project: _____

Contractor: _____

ATTN:

Submittal Number:	
Contract Number:	
FC No:	
Specification No.:	

Submittal No.	Format	Sheet Rev.	Rev. Date	Date Needed	Description	Review Code

	Quantity	Initials	Date Sent	Date Rec'd
Contractor to CM				
CM to A/E				
A/E to CM				
CM to Contractor				

REVIEW CODE

1 - No Exceptions Taken
2 - Make Corrections Noted
3 - Amend and Resubmit
4- Rejected - See Remarks
5- For Record Only

Comments to Contractor:	Reviewer's Signature:	Date:
	Reviewer's Name / Title:	
	Company Name:	

Force Account Work Report

Project Name:	Contract Day No:	Shift No.:
Contract No.:	Date:	Report No.:
Temp.: a.m. p.m.	Description:	
Weather: _____am_____pm Rainfall (inches)_____.		
Contractor's Force (include all persons used on this Force Account Work):		

No.	Work Classification	Hours

Materials and Supplies (attached certified invoice as appropriate)		
Item	Description	Use

Machinery and Equipment (only for time used on Force Account Work):		
Type	Use	Hours Used

Description of Work Accomplished:

Description of Original Work That Will Not be Performed (if any):

_____
Contractor Representative
Date_____

_____
CM Inspector
Date_____

CONTRACTOR REQUEST FOR PAYMENT OF
STORED MATERIALS

PROJECT: _____ CONTRACT NO.: _____

CONTRACTOR: _____ WBS #: _____

TO: _____ DATE: _____

In accordance with the provisions of the SPECIAL CONDITIONS, request is made for payment as "Materials on Hand" for the following materials:

ITEM NO.	QTY	MATERIAL DESCRIPTION	INVOICE NUMBER	TYPE OF SUBSTANTIATING EVIDENCE OF PURCHASE ATTACHED	WHERE STORED

AFFIDAVIT

The materials listed above have been purchased exclusively for use on the above referenced project. The material is separated from other like materials and is physically identified as the property of _____, and for USE only on this Contract. The Owner may enter upon the premises for the purposes set forth in the GENERAL CONDITIONS for inspection, checking or auditing, or for any other purpose as they consider necessary. It is expressly understood and agreed that this information and affidavit is furnished to the Owner for the purpose of obtaining payment for the above materials before they are delivered to, or incorporated into, the project described above, and that the storage thereof at the location is subject to the Conditions of the Contract. A revised form showing the current status of the value of materials for which payment is being requested will be submitted.

CONTRACTOR SIGNATURE: _____ DATE: _____

Title: _____

When stored at a location other than on the jobsite or at a fabricator's yard, a warehouse receipt for the MATERIAL issued in the name of the Owner shall accompany the request for payment in case the storage location (other than the jobsite or fabricator's yard) is the Contractor's property, the area containing the material to be paid for shall be fenced off and posted to indicate that the materials within the fenced area are under the control of the Owner. Prior to storing at a location other than the jobsite, approval must be obtained from the Engineer.

INSTRUCTIONS TO CONTRACTOR:

Submit original and two copies to the Engineer not later than one week prior to the Payment Request.

Attach evidence of purchase (and warehouse receipt when required) to original.

BUILDING ATL'S FUTURE

Certificate of Substantial Completion

Project Name:
Contractor Name:
Contract No.:
WBS No.:
Date of Issuance:

The portions of the Project accepted as Substantially Complete shall include: _____.

The work performed, as designated above, has been inspected and found to be satisfactory subject only to Final Acceptance of the Project as a whole. In accordance with the General Conditions, GC-_____ Notice of Substantial Completion, the date of Substantial Completion of the portion of the work designated above is established as _____.

Nothing in this Certificate of Substantial Completion modifies or changes any of the obligations or provisions contained in the Contract Documents for this project.

A list of items concerning the scope of work found substantially complete pursuant to this Certificate of Substantial Completion to be completed or corrected by Contractor in accordance with the Contract Documents is attached.

Contractor	_____ By	_____ Date
Construction Manager	_____ By	_____ Date
Architect/Engineer:	_____ By	_____ Date
Project Manager	_____ By	_____ Date
Assistant General Manager – P&D	_____ By	_____ Date

Notice of Final Acceptance

Project Name: _____
Contractor Name: _____
Contract No.: _____
WBS No.: _____
Date of Issuance: _____

The Project as a whole has been accepted and includes:

_____
_____
_____
_____
_____

The work performed under the above referenced Contract has been inspected and found to be satisfactory. In accordance with the General conditions, GC-43, the date of Final Acceptance of the work is hereby established as _____.

The warranty provisions for work as defined in the General Conditions, GC-35 Warranty, shall remain in force for a period of twenty-four (24) months after the date of this Final Acceptance.

Definition of Date of Final Acceptance

The date of Final Acceptance of the Project is the date when the Project as a whole conforms to all requirements of the Contract, so the City may occupy or utilize the entire Project for use as defined in the General Conditions, GC-25 Use of Completed Portions of the Work.

Contractor	By	Date
Design Service Provider	By	Date
Design Manager	By	Date
Resident Engineer	By	Date
Project Manager	By	Date
Assistant Director	By	Date
Assistant General Manager	By	Date

Corrective Action Form

Project Name:		Contract No.:	No.:
Contractor Name:		WBS No.:	Reply Due Date:
Issued To:			
Condition Description			
Initiated By:	Signature:	Title:	Date:
QA Coordinator	Name:	Signature:	Date:
Cause and Corrective Action			
Action Taken to Preclude Reoccurrence			
Initiated By:	Signature:	Title:	Date:
Verification of Corrective Action			
Verified By:	Signature:	Title:	Date:
QA Coordinator	Name:	Signature:	Date:

Construction Incident Report

Date:
Time of Incident: AM/PM
Contract Name:
Contractor:
Reported By:

Contract No:
Incident Report No:

Temperature:
Weather:

Incident Location:

Emergency Contacts Made:

Detailed Observations:

Information or Action Required By Contractor:

By:

_____

(Type in Name of Reporting Staff Member)
(Type in Position Title)

CHANGE NOTICE

Project Name:

Contractor:

Address:

Change Notice No.:

Contract No.:

Date:

DESCRIPTION:

ATTACHMENTS:

Copies	Date	Description	Revision

REFERENCE DOCUMENTS:

ACTION REQUIRED BY CHANGE NOTICE: CONSTRUCTION:		COST AND SCHEDULE IMPACT	
Proceed immediately in accordance with description.	☐	No Cost or Schedule Impact Unit prices to be used as directed in the Contract	☐ ☐
Do not proceed until further direction	☐	Submit detailed quotation within _____days Submit daily Time and Materials Records	☐ ☐

Issued by:

Date:

Construction Manager / Resident Engineer

Contractor

Concurrence: Project Manager

Distribution:

Contractor	*Original*	*Project Manager:*	☐
Resident Engineer	☐	*Design*	☐
Construction Manager	☐	_____	☐
Estimating	☐	_____	☐

Files: _____

NOTICE OF NON-COMPLIANCE

NOTIFICATION NO.: NC- _____ **Date:** _____

TO (Contractor): _____ **Contract No:** _____

PROJECT: _____ **WBS No:** _____

Pursuant to the Articles of the Special Provisions and Technical Provisions of the contract you are hereby notifed that materials and/or items of the Work, as fully described below, were reviewed, inspected and/or tested by this office and were found not to be in conformance with the requirements of the subject contract. Your immediate attention and corrective actions are required. Payment will be withheld for the non-compliant item(s) noted below until such time as corrective action is taken and accepted.

Specification Reference: _____ Paragraph: _____

Drawing Reference: _____ Detail: _____

Non-Compliant Item(s) and Location:

Contract Requirement:

Non-compliant item(s) detected by: Test ☐ Inspection ☐

Non-compliant item(s) is/are: Defective ☐ Rejected ☐

Issued by:

Construction Manager / Resident Engineer *(signature)*

Project Manager *(signature)*

Received/Acknowledged by:

Contractor *(signature)* Date

Title

(continued on next page)

NOTICE OF NON-COMPLIANCE ***(continued)***
Notification No: **NC-** -
Contract No.: -
Contractor: -

Contractor's Corrective Action Proposal:

Use attachment(s) if necessary.

Proposal Rejected by:

Describe reason for rejection and by whom. Use attachment(s) if necessary.

Design Service Provider's Corrective Action Proposal:

Use attachment(s) if necessary.

Contractor's Acceptance of Design Service Provider's Proposal

Contractor (signature) Date

Proposal Accepted by:

Signature	Date	Design Service Provider
Signature	Date	Design Representative
Signature	Date	Project Manager
Signature	Date	Safety Representative
Signature	Date	Resident Engineer
Signature	Date	Construction Manager

**** Note: Architect/Engineer must accept all design-related proposals for corrective action.***

(continued on next page)

NOTICE OF NON-COMPLIANCE ***(continued)***

Notification No: NC- -

Contract No.: -

Contractor: -

Corrective Action Taken and Field Remarks by Inspector:

Corrective Action Verified:

Inspector *(signature)* Date

Resident Engineer *(signature)* Date

Distribution:

- Contractor
- Design Service Provider
- Design Representative
- Project Manager
- Resident Engineer
- Construction Manager
- Document Control

APPENDIX C

WAGE RATES

General Decision Number: GA150146 05/22/2015 GA146

Superseded General Decision Number: GA20140146

State: Georgia

Construction Type: Building

County: Fulton County in Georgia.

Note: Executive Order (EO) 13658 establishes an hourly minimum wage of $10.10 for 2015 that applies to all contracts subject to the Davis-Bacon Act for which the solicitation is issued on or after January 1, 2015. If this contract is covered by the EO, the contractor must pay all workers in any classification listed on this wage determination at least $10.10 (or the applicable wage rate listed on this wage determination, if it is higher) for all hours spent performing on the contract. The EO minimum wage rate will be adjusted annually. Additional information on contractor requirements and worker protections under the EO is available at www.dol.gov/whd/govcontracts.

Modification Number	Publication Date
0	01/02/2015
1	03/27/2015
2	05/22/2015

* ASBE0048-001 04/01/2015

	Rates	Fringes
ASBESTOS WORKER/HEAT & FROST INSULATOR	$ 26.17	14.96

---

* ASBE0048-002 04/01/2015

	Rates	Fringes
FIRESTOPPER	$ 26.17	14.96

BOIL0026-001 01/01/2013

	Rates	Fringes
BOILERMAKER	$ 24.91	19.69

CARP0225-001 07/01/2011

	Rates	Fringes
CARPENTER (Drywall Finishing, Drywall Hanging, and Metal Stud Installation)	$ 22.75	6.55

ELEV0032-001 01/01/2015

	Rates	Fringes
ELEVATOR MECHANIC	$ 37.44	28.385

PAID HOLIDAYS:

a. New Year's Day, Memorial Day, Independence Day, Labor Day, Vetern's Day, Thanksgiving Day, the Friday after Thanksgiving, and Christmas Day.

b. Employer contributes 8% of regular hourly rate to vacation pay credit for employee who has worked in business more than 5 years; 6% for less than 5 years' service.

ENGI0926-001 07/01/2013

	Rates	Fringes
POWER EQUIPMENT OPERATOR:		
Backhoe/Excavator, Bobcat/Skid Loader/Skid Steer, Bulldozer, Forklift, and Loader	$ 23.39	10.13
Crane	$ 27.88	10.13
Oiler	$ 18.70	10.13

PAIN1940-001 10/01/2014

	Rates	Fringes
GLAZIER	$ 22.25	6.01

FOOTNOTE: Paid holidays: Thanksgiving Day, Christmas Day, New Year's Day, National Memorial Day, July 4th and Labor Day; if the employee works the day before and the day after the holiday.

PLUM0072-023 05/01/2013

	Rates	Fringes
PLUMBER	$ 29.90	12.21

PLUM0072-024 05/01/2013

	Rates	Fringes
PIPEFITTER (Including Installation of HVAC Pipe, HVAC Unit, & HVAC Electrical /Temperature Controls)	$ 29.90	12.21

SHEE0085-001 08/01/2012

	Rates	Fringes
SHEET METAL WORKER (Including HVAC Duct Installation; Excluding Metal Roof Installation)	$ 29.70	13.07

SUGA2012-053 08/11/2012

	Rates	Fringes
ACOUSTICAL CEILING MECHANIC.....	$ 15.00	0.00
ALARM INSTALLER.....	$ 18.49	3.88
BRICKLAYER.....	$ 16.00	0.00
CARPENTER, Excludes Acoustical Ceiling Installation, Drywall Finishing/Taping, Drywall Hanging, Form Work, and Metal Stud Installation.....	$ 17.86	3.62
CEMENT MASON/CONCRETE FINISHER...	$ 15.08	3.36
ELECTRICIAN (Low Voltage Wiring and Installation of Sound and Communication Systems).....	$ 22.44	5.42
ELECTRICIAN, Excludes Low Voltage Wiring and Installation of Alarms and Sound and Communication Systems.....	$ 22.78	5.27
FLOOR LAYER (Carpet, Vinyl and Resilient Flooring).....	$ 20.00	0.00
FORM WORKER.....	$ 12.20	0.49
INSULATOR (Batt, Blown and Foam).....	$ 17.67	0.14
IRONWORKER, REINFORCING.....	$ 20.48	8.41
IRONWORKER, STRUCTURAL.....	$ 20.00	0.35
LABORER: Common or General.....	$ 11.39	0.00
LABORER: Flagger.....	$ 13.44	0.00
LABORER: Landscape.....	$ 12.19	0.00
LABORER: Mason Tender - Brick...	$ 9.00	0.00
LABORER: Pipelayer.....	$ 12.00	0.23
OPERATOR: Asphalt Spreader.....	$ 16.53	0.00
OPERATOR: Grader/Blade.....	$ 17.52	0.00
OPERATOR: Roller.....	$ 14.49	0.00
OPERATOR: Screed.....	$ 14.17	0.00

PAINTER: Brush, Roller and Spray	$ 16.00	1.62
ROOFER, Excludes Installation of Metal Roofs	$ 10.49	0.64
SHEET METAL WORKER (Metal Roofs Installation)	$ 21.75	0.00
SPRINKLER FITTER (Fire Sprinklers)	$ 22.69	12.30
TILE FINISHER	$ 10.36	0.00
TILE SETTER	$ 20.00	0.00
TRUCK DRIVER: Dump Truck	$ 16.05	2.92
TRUCK DRIVER: Lowboy Truck	$ 17.41	0.00

WELDERS - Receive rate prescribed for craft performing operation to which welding is incidental.

==========

Unlisted classifications needed for work not included within the scope of the classifications listed may be added after award only as provided in the labor standards contract clauses (29CFR 5.5 (a) (1) (ii)).

The body of each wage determination lists the classification and wage rates that have been found to be prevailing for the cited type(s) of construction in the area covered by the wage determination. The classifications are listed in alphabetical order of "identifiers" that indicate whether the particular rate is a union rate (current union negotiated rate for local), a survey rate (weighted average rate) or a union average rate (weighted union average rate).

Union Rate Identifiers

A four letter classification abbreviation identifier enclosed in dotted lines beginning with characters other than "SU" or "UAVG" denotes that the union classification and rate were prevailing for that classification in the survey. Example: PLUM0198-005 07/01/2014. PLUM is an abbreviation identifier of the union which prevailed in the survey for this classification, which in this example would be Plumbers. 0198 indicates the local union number or district council number where applicable, i.e., Plumbers Local 0198. The next number, 005 in the example, is an internal number used in processing the wage determination. 07/01/2014 is the effective date of the most current negotiated rate, which in this example is July 1, 2014.

Union prevailing wage rates are updated to reflect all rate changes in the collective bargaining agreement (CBA) governing this classification and rate.

Survey Rate Identifiers

Classifications listed under the "SU" identifier indicate that no one rate prevailed for this classification in the survey and the published rate is derived by computing a weighted average rate based on all the rates reported in the survey for that classification. As this weighted average rate includes all rates reported in the survey, it may include both union and non-union rates. Example: SULA2012-007 5/13/2014. SU indicates the rates are survey rates based on a weighted average calculation of rates and are not majority rates. LA indicates the State of Louisiana. 2012 is the year of survey on which these classifications and rates are based. The next number, 007 in the example, is an internal number used in producing the wage determination. 5/13/2014 indicates the survey completion date for the classifications and rates under that identifier.

Survey wage rates are not updated and remain in effect until a new survey is conducted.

Union Average Rate Identifiers

Classification(s) listed under the UAVG identifier indicate that no single majority rate prevailed for those classifications; however, 100% of the data reported for the classifications was union data. EXAMPLE: UAVG-OH-0010 08/29/2014. UAVG indicates that the rate is a weighted union average rate. OH indicates the state. The next number, 0010 in the example, is an internal number used in producing the wage determination. 08/29/2014 indicates the survey completion date for the classifications and rates under that identifier.

A UAVG rate will be updated once a year, usually in January of each year, to reflect a weighted average of the current negotiated/CBA rate of the union locals from which the rate is based.

WAGE DETERMINATION APPEALS PROCESS

1.) Has there been an initial decision in the matter? This can be:

* an existing published wage determination
* a survey underlying a wage determination
* a Wage and Hour Division letter setting forth a position on a wage determination matter
* a conformance (additional classification and rate) ruling

On survey related matters, initial contact, including requests for summaries of surveys, should be with the Wage and Hour Regional Office for the area in which the survey was conducted

because those Regional Offices have responsibility for the Davis-Bacon survey program. If the response from this initial contact is not satisfactory, then the process described in 2.) and 3.) should be followed.

With regard to any other matter not yet ripe for the formal process described here, initial contact should be with the Branch of Construction Wage Determinations. Write to:

Branch of Construction Wage Determinations
Wage and Hour Division
U.S. Department of Labor
200 Constitution Avenue, N.W.
Washington, DC 20210

2.) If the answer to the question in 1.) is yes, then an interested party (those affected by the action) can request review and reconsideration from the Wage and Hour Administrator (See 29 CFR Part 1.8 and 29 CFR Part 7). Write to:

Wage and Hour Administrator
U.S. Department of Labor
200 Constitution Avenue, N.W.
Washington, DC 20210

The request should be accompanied by a full statement of the interested party's position and by any information (wage payment data, project description, area practice material, etc.) that the requestor considers relevant to the issue.

3.) If the decision of the Administrator is not favorable, an interested party may appeal directly to the Administrative Review Board (formerly the Wage Appeals Board). Write to:

Administrative Review Board
U.S. Department of Labor
200 Constitution Avenue, N.W.
Washington, DC 20210

4.) All decisions by the Administrative Review Board are final.

==========

END OF GENERAL DECISION