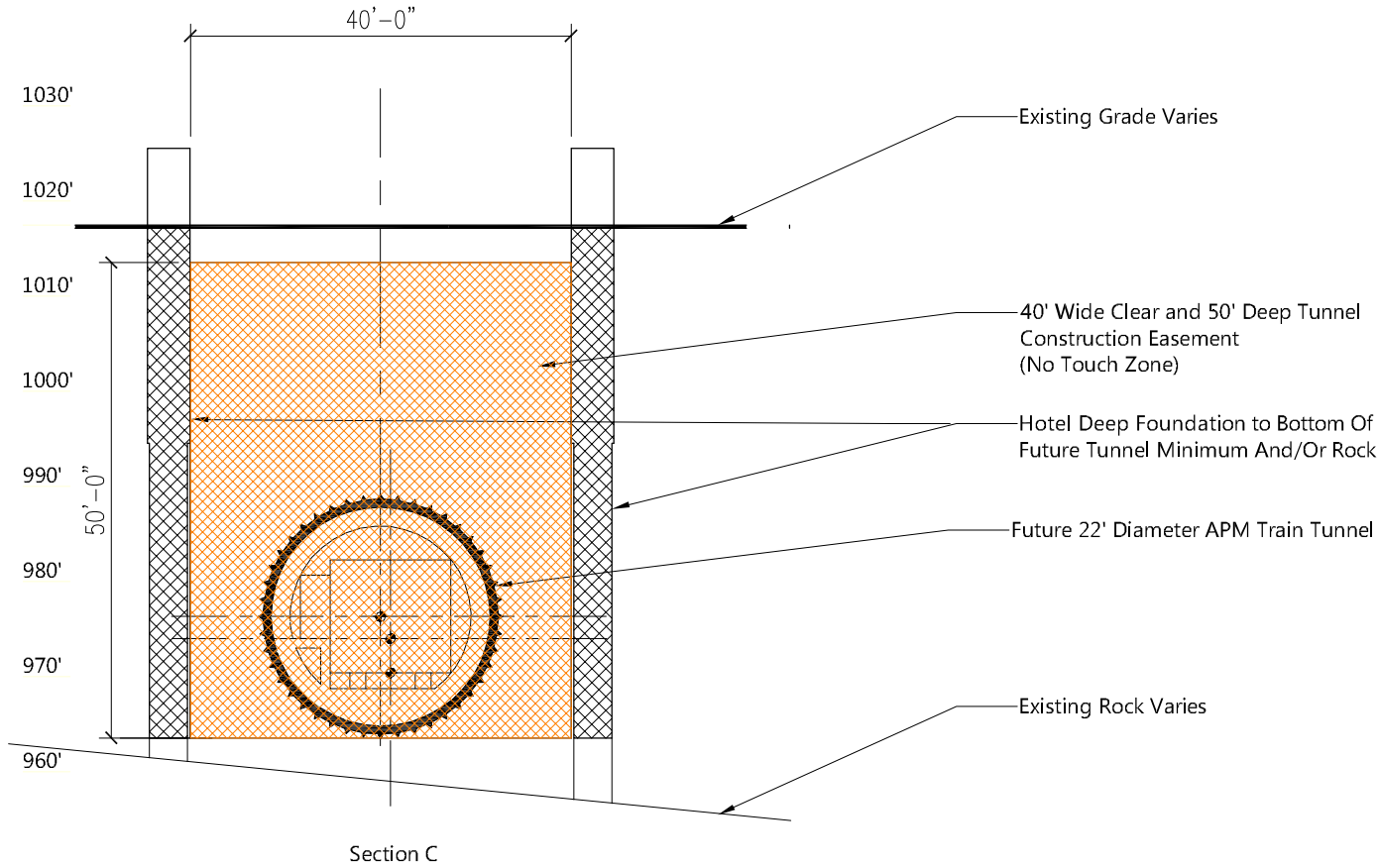

LEGEND

- TUNNEL CONSTRUCTION ACCESS
- CONSTRUCTION ACCESS
- FUTURE CONSTRUCTION ACCESS

NOTE,

SOURCES: TCE Architects, LLC., December 2014; Heery International, Inc., Decemberr 2014.
PREPARED BY: Ricondo & Associates, Inc., December 2014; TCE Architects, LLC., December 2014.

EXHIBIT 2

NORTH 0 20 ft.

Tunnel Clear Zone

Drawing: T:\118.11-Plane Train Turn-back_CADD\scheme-b\EXHIBIT-A-2014-10-13.dwg_Layout: EXHIBIT-2_Dec 02, 2014, 11:04am